water passion

CALPEDA ROMANIA - INFINITY PUMPS SRL
Tel: 0268.33.47.47 / 0722.244.944
vanzari@calpeda.ro | www.calpeda.ro

1959

WHO WE ARE

WE WANT TO CONTINUE THAT WHICH WAS STARTED MANY YEARS AGO BY VINICIO METTIFOGO, FOUNDER AND PIONEER.

Calpeda is a family owned company with an history of 60 years.
Today, we are a reality that has evolved over the years, always looking to the future with a spirit that has brought us to being a respected reference point in the great world of water.
Our history has taken our tradition and strength to you, acknowledged for our professionalism, quality, reliability and service.

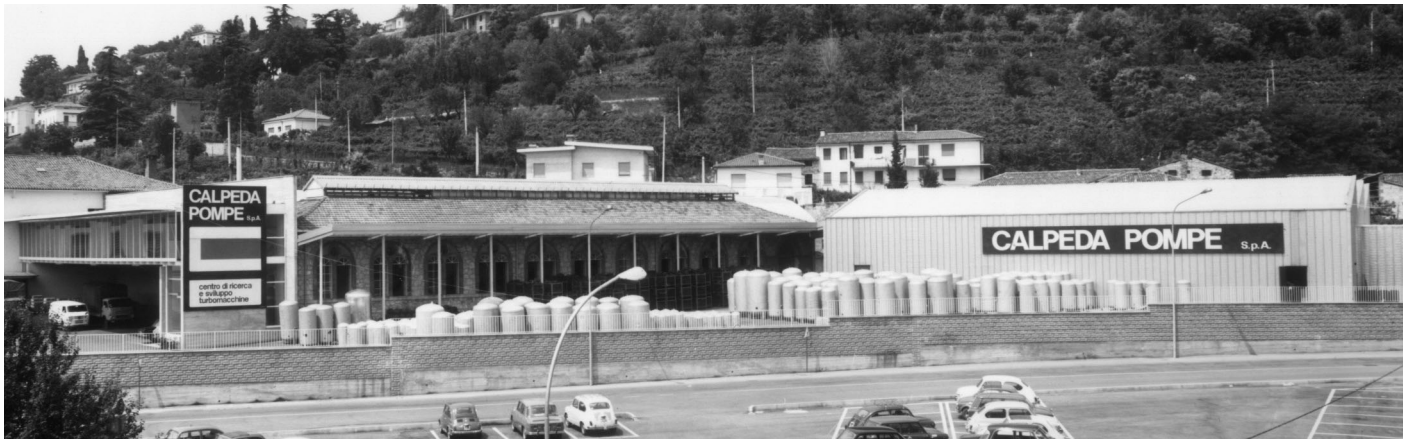

2019

CALPEDA TODAY

Employees: 250
Offices: Montorso V. (Vicenza) Italy
Main factory: 30,000 sq. metres (covered)
Types of pumps: more than 2,000
Power outputs: from 0.5 kW to 200 kW

INDEX

calpeda

NEW

pag. 7 e-idos® products

Pressurized system with integrated control

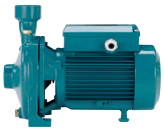

pag. 13 NM, NMD

Close coupled centrifugal pumps with threaded ports

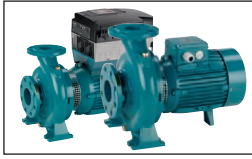

pag. 25 NM(EI), NMS

Close coupled centrifugal pumps with flanged connections

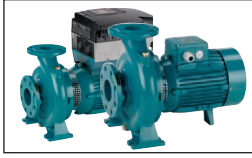

pag. 41 NM4(EI), NMS4

Close coupled centrifugal pumps n = 1450 rpm

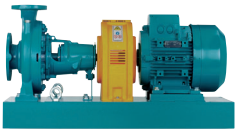

pag. 61 N, N4

End-suction centrifugal pumps EN 733

pag. 87 NR(EI), NR4(EI)

In-line pumps

pag. 103 MXH(EI), MXHL

Horizontal multi-stage stainless steel pumps AISI 304, AISI 316L

pag. 119 MXP

Horizontal multi-stage close coupled pumps

pag. 121 MGP

Horizontal multi-stage close coupled pumps

pag. 123 MPSU

Vertical multi-stage close coupled stainless steel pumps

pag. 127 MXV-B(EI)

Vertical multi-stage close coupled stainless steel pumps

NEW

pag. 135 MXV(EI), MXVL

Vertical multi-stage stainless steel pumps AISI 304, AISI 316L

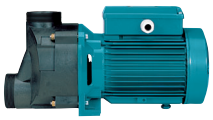

pag. 159 SPA Compact Spa

Self-draining whirpool pumps

pag. 161 MPC Compact Pool

Self-priming swimming pool pumps

pag. 165 NMP

Self-priming centrifugal pumps with built-in strainer

pag. 169 PF

Pre-filters in stainless steel

pag. 171 A

Self-priming centrifugal pumps with open impeller

pag. 177 C

Centrifugal pumps with open impeller

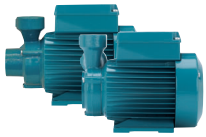

pag. 183 CT

Peripheral pumps

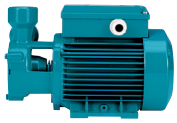

pag. 187 T, TP

Peripheral pumps

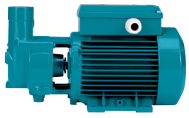

pag. 193 CA

Self-priming liquid ring pumps

pag. 197 NGL

Self-priming pumps

pag. 201 NGX

Self-priming pumps

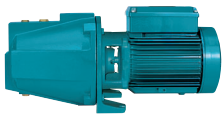

pag. 205 NG

Self-priming pumps

calpeda

pag. 213 **MXA**

Horizontal multi-stage
Self-priming pumps

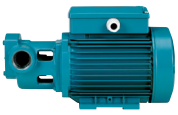

pag. 215 **I, IR**

Gear pumps

pag. 217 **VAL, SC**

Vertical submerged pumps

pag. 221 **GM 10**

Submersible drainage pump

pag. 223 **GXR, GXV**

Submersible stainless steel pumps

pag. 231 **GQR**

Submersible drainage pumps

pag. 235 **GX 40**

Submersible stainless steel pumps

pag. 239 **GQS, GQV**

Submersible sewage and drainage pumps

pag. 243 **GQN** *NEW*

Submersible sewage and drainage pumps

pag. 247 **GM 50**

Submersible sewage and drainage pumps

pag. 251 **GQG**

Submersible pumps
with high power grinder

pag. 255 **GM**

Submersible pumps

pag. 317 **GEO**

GEOTRIT - GEOCOMP - GEOCLEAN
Automatic lifting station

pag. 323 **GEO**

Automatic waste water collecting
and lifting station

pag. 349 **MP**

Multi-stage submersible
clean water pumps

pag. 353 **MPS**

Multi-stage submersible
clean water pumps

pag. 357 **MXS**

Stainless steel multi-stage submersible
clean water pumps

pag. 361 **SD, SDF, SDN**

Submersible borehole pumps
for 4”and 6” wells

pag. 378 **SDX**

Stainless steel submersible borehole
pumps for 6” and 8” wells

pag. 391 **SDS**

Submersible borehole pumps
for 6” - 8” and 10” wells

pag. 403 **CS, FK**

Submersible motors
for 4” - 6” - 8” and 10” wells

pag. 415 **NCE** *NEW*

Heating and conditioning

pag. 473 **IDROMAT**

Electronic regulator for pumps

pag. 477 **EASYMAT**

Variable speed system driven
by frequency converter

INDEX

pag. 481 **VARIOMAT 2**

Variable speed system driven by frequency converter

pag. 483 **I-MAT** *NEW*

Variable speed system driven by frequency converter

pag. 487 **BS**

Pressure boosting sets

pag. 579 **EJ, DJ, EDJ**

UNI-EN 12845 units for feeding fire-extinguishing systems

pag. 585 **QM, QT**

Control panels

pag. 606 **Accessories**

Accessories for pumps

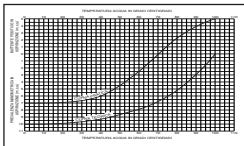

pag. 613

Technical appendix

CALPEDA ROMANIA - INFINITY PUMPS SRL
Tel: 0268.33.47.47 / 0722.244.944
vanzari@calpeda.ro | www.calpeda.ro

calpeda®

e-idos® products

PLUG AND PLAY SOLUTION

ENERGY EFFICIENCY

COMPACT DESIGN

CALPEDA ROMANIA - INFINITY PUMPS SRL
Tel: 0268.33.47.47 / 0722.244.944
vanzari@calpeda.ro | www.calpeda.ro

e-idos® products

Pressurized system with integrated control

calpeda®

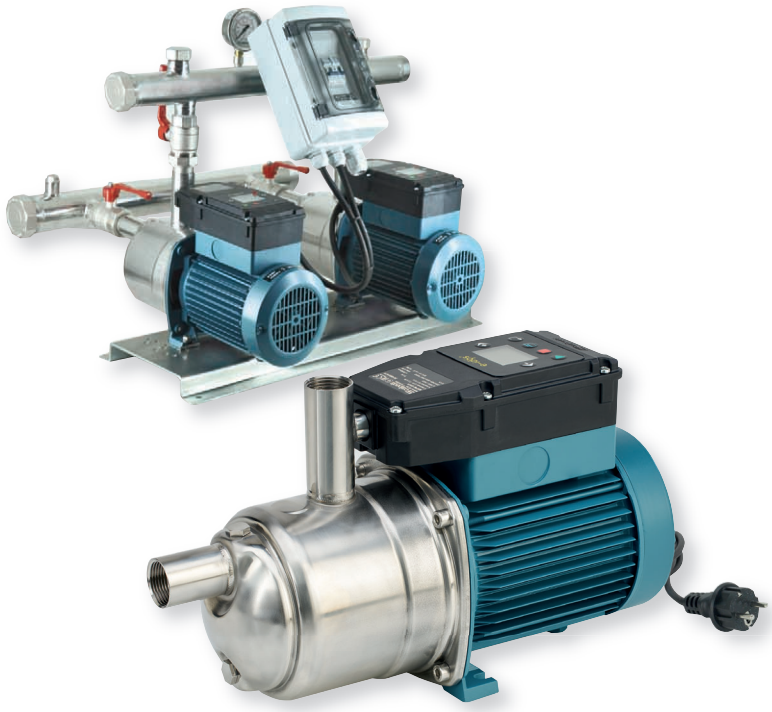

Construction

Easy to install, compact and plug and play pressurized system with integrated pressure transducer for automatic control of starting/stopping of the pump when utilization points are opened/closed with a integrated non-return valve into the pump suction.

Pumps:
E-MXP: version with multistage pumps
E-NGX: version with self-priming pumps
E-MXA: version with self-priming multistage pumps

Applications

For water supply.
For domestic use, for garden use and irrigation.

Features

- high efficiency asynchronous single-phase motor
- capacitor less stressed in voltage
- uniform and lower motor temperature
- motor power control
- programmable re-start pressure
- no hydraulic losses due to the measuring devices
- voltage and current control
- monitoring of maximum starting current

EASY TO INSTALL

Plug And Play solution

ECONOMIC SAVING

High efficiency asynchronous single-phase motor
24 % less energy consumption compared to a standard pump

EASY TO USE

Equipped with a programmable software and, thanks to the analogic pressure sensor, the product allows to set the restart pressure. An ideal solution which allows to reduce or remove the need of a expansion tank

Protections

- dry-run protection
- overload control and overheating motor control
- pump blockage
- power supply control
- starts per hour control

Operating conditions

Liquid temperature: 0 °C to +35 °C (0 °C to +50 °C for E-MXP).
Ambient temperature up to +40 °C.
Maximum permissible pressure in the pump casing: 8 bar.
Continuous duty.

Materials

Component	Material
Pump casing	Cr-Ni steel 1.4301 EN 10088 (AISI 304)
Casing cover	Cr-Ni steel 1.4301 EN 10088 (AISI 304)
Pump Shaft	Chrome steel 1.4104 EN 10088 (AISI 430)
Plug	Cr-Ni steel 1.4305 EN 10088 (AISI 303)
Suction casing (E-MXA)	PPO-GF20 (Noryl)
Stage casing (E-MXA,E-MXP)	PPO-GF20 (Noryl)
Impeller	PPO-GF20 (Noryl)
Diffuser (E-NGX)	PPO-GF20 (Noryl)
Ejector (E-NGX)	PPO-GF20 (Noryl)
Mechanical seal	Carbon - Ceramic - NBR

Motor

2-pole induction motor, 50 Hz (n ≈ 2800 rpm).
Single-phase 230 V ± 10%, with thermal protector.
Capacitor inside the terminal box.
Cable: H07RN8-F, 3G1,5 mm², length 1,5 m, with plug CEI-UNEL 47166.
Insulation class F.
Protection IP X4.
Constructed in accordance with: EN 60034-1;
EN 60335-1, EN 60335-2-41.

CALPEDA ROMANIA - INFINITY PUMPS SRL
Tel: 0268.33.47.47 / 0722.244.944
vanzari@calpeda.ro | www.calpeda.ro

e-idos® products

1-pump pressurized system with integrated control

calpeda®

Performance n ≈ 2800 1/min

TYPE	P_1	P_2		Q m³/h	0	1	1,5	2	2,25	3	3,5	4	4,5	5	5,4	6	6,5
	kW	kW	HP	Q l/min	0	16,6	25	33,3	37,5	50	58,3	66,6	75	83,3	90	100	108,3
E-MXPM 203-PC	0,56	0,45	0,6		33,7	30,5	28,6	26,4	25,2	21,1	17,9	14,4	10,8	7,0			
E-MXPM 204-PC	0,70	0,55	0,75		45,1	40,9	38,5	35,8	34,4	29,4	25,6	21,3	16,7	11,9			
E-MXPM 205-PC	0,89	0,75	1	**H** m	55,6	50,4	47,3	43,9	42,1	36,1	31,4	26,3	20,9	15,3			
E-MXPM 403-PC	0,75	0,55	0,75		34,0				30,1	27,9	26,2	24,2	22,0	19,6	17,5	13,8	10,2
E-MXPM 404-PC	1,05	0,75	1		44,9				39,5	36,9	34,7	32,2	29,4	26,3	23,5	18,9	14,4

	P_1	P_2		Q m³/h	0	0,3	1	2	2,4	3	3,2	3,6	4	4,5	5	6
	kW	kW	HP	Q l/min	0	5	16,6	33,3	40	50	53,3	60	66,6	75	83,3	100
E-NGXM 2/80-PC	0,8	0,55	0,75		50,0	45,5	37,2	29,6	26,1	21,1						
E-NGXM 3/100-PC	0,95	0,65	0,9	**H** m	50,9	46	38,8	31	27,4	23,2	22,2					
E-NGXM 4/110-PC	1	0,75	1		43,2	40,8	36,4	31,4	29,3	25,9	24,8	23	21,6	19,9		

	P_1	P_2		Q m³/h	0	1	1,5	2	2,25	3	3,5	4	4,5	5	5,4	6	6,5
	kW	kW	HP	Q l/min	0	16,6	25	33,3	37,5	50	58,3	66,6	75	83,3	90	100	108,3
E-MXAM 203-PC	0,56	0,45	0,6		33,6	30,1	28,0	25,6	24,3	20,5	17,6	14,2					
E-MXAM 204-PC	0,70	0,55	0,75	**H** m	44,7	40,0	37,2	34,2	32,6	27,4	23,6	19,3	14,5				
E-MXAM 403-PC	0,75	0,55	0,75		33,8			30,1	29,4	27,1	25,3	23,4	21,2	18,9	16,8	13,8	
E-MXAM 404-PC	1,05	0,75	1		44,5			39,4	38,6	35,8	33,5	30,9	28,1	25,1	22,5	18,3	14,4

P_1 Max. power input.
P_2 Rated motor power output.

Test results with clean cold water, without gas content.
Tolerances according to UNI EN ISO 9906:2012

+ 0,5 m security margin on NPSH-value is necessary.

Dimensions and weights

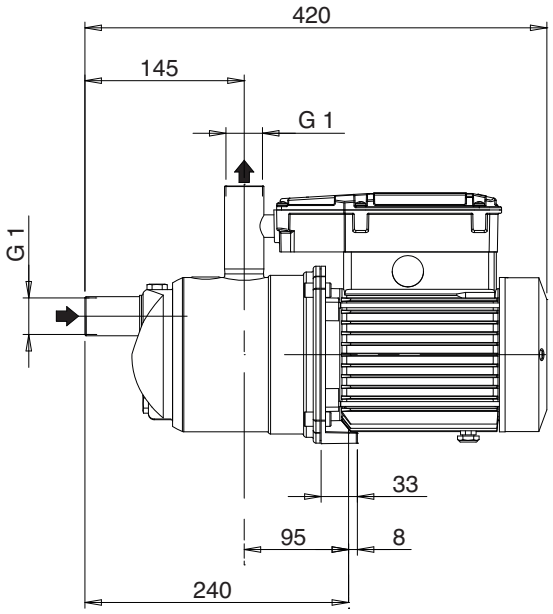

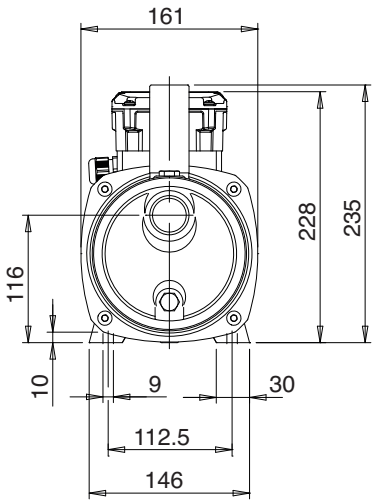

TYPE	Net weight kg (1)
E-MXPM 203-PC	9,5
E-MXPM 204-PC	10,8
E-MXPM 205-PC	11,7
E-MXPM 403-PC	10,6
E-MXPM 404-PC	11,5
E-MXAM 203-PC	9,6
E-MXAM 204-PC	10,9
E-MXAM 403-PC	10,7
E-MXAM 404-PC	11,5
E-NGXM 2/80-PC	10,0
E-NGXM 3/100-PC	10,0
E-NGXM 4/100-PC	10,9

(1) With cable length: 1,5 m

CALPEDA ROMANIA - INFINITY PUMPS SRL
Tel: 0268.33.47.47 / 0722.244.944
vanzari@calpeda.ro | www.calpeda.ro

Characteristic curves n ≈ 2800 1/min

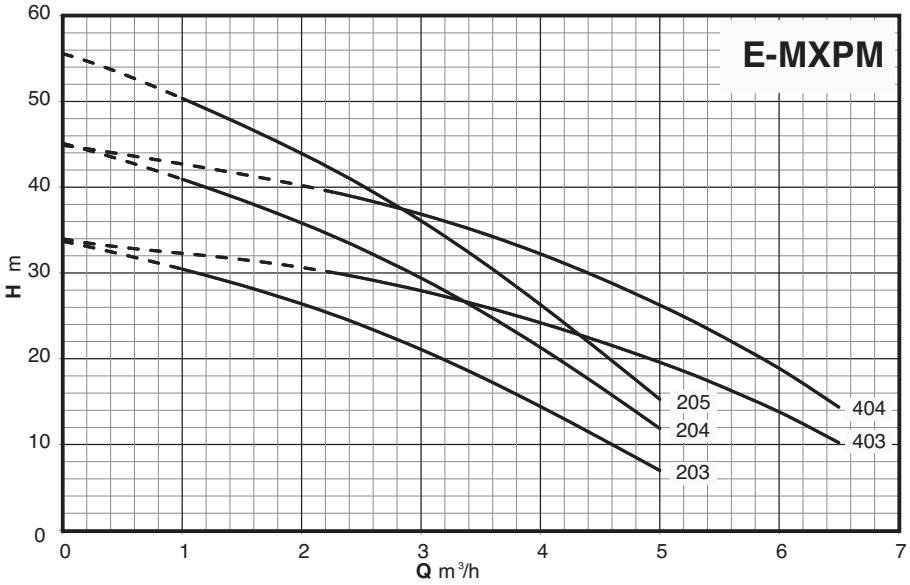

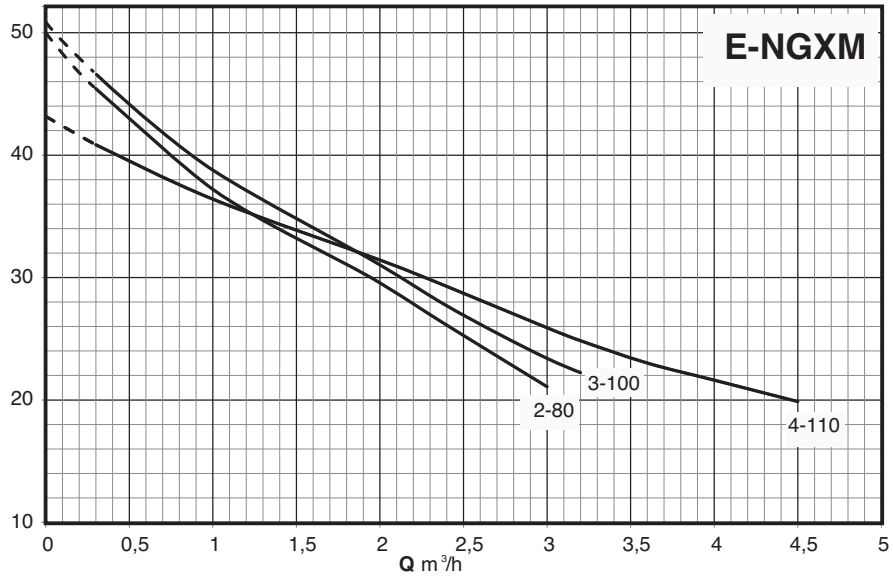

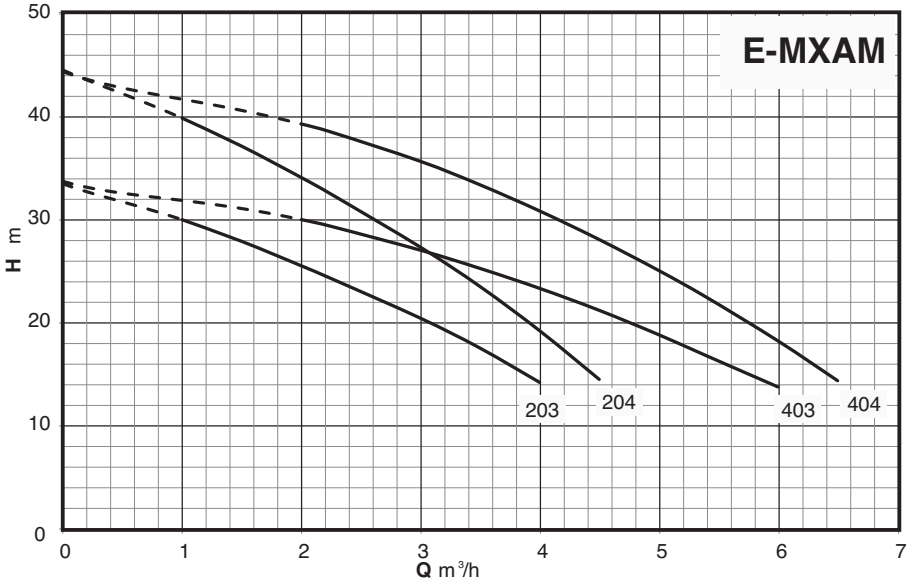

CALPEDA ROMANIA - INFINITY PUMPS SRL
Tel: 0268.33.47.47 / 0722.244.944
vanzari@calpeda.ro | www.calpeda.ro

e-idos® products

2-pumps pressurized system with integrated control

calpeda®

Performance n ≈ 2800 1/min

	P_1	P_2		Q m³/h	0	2	3	4	4,5	6	7	8	9	10	10,8	12	13
	kW	kW	HP	l/min	0	33,3	50	66,6	75	100	116,6	133,2	150	166,6	180	200	216,6
BS2F 2E-MXPM 203-PC	0,56x2	0,45x2	0,6x2	H m	33,7	30,5	28,6	26,4	25,2	21,1	17,9	14,4	10,8	7,0			
BS2F 2E-MXPM 204-PC	0,70x2	0,55x2	0,75x2		45,1	40,9	38,5	35,8	34,4	29,4	25,6	21,3	16,7	11,9			
BS2F 2E-MXPM 205-PC	0,89x2	0,75x2	1x2		55,6	50,4	47,3	43,9	42,1	36,1	31,4	26,3	20,9	15,3			
BS2F 2E-MXPM 403-PC	0,75x2	0,55x2	0,75x2		34,0				30,1	27,9	26,2	24,2	22,0	19,6	17,5	13,8	10,2
BS2F 2E-MXPM 404-PC	1,05x2	0,75x2	1x2		44,9				39,5	36,9	34,7	32,2	29,4	26,3	23,5	18,9	14,4

P_1 Max. power input.
P_2 Rated motor power output.

Test results with clean cold water, without gas content.
Tolerances according to UNI EN ISO 9906:2012

+ 0,5 m security margin on NPSH-value is necessary.

Dimensions and weights

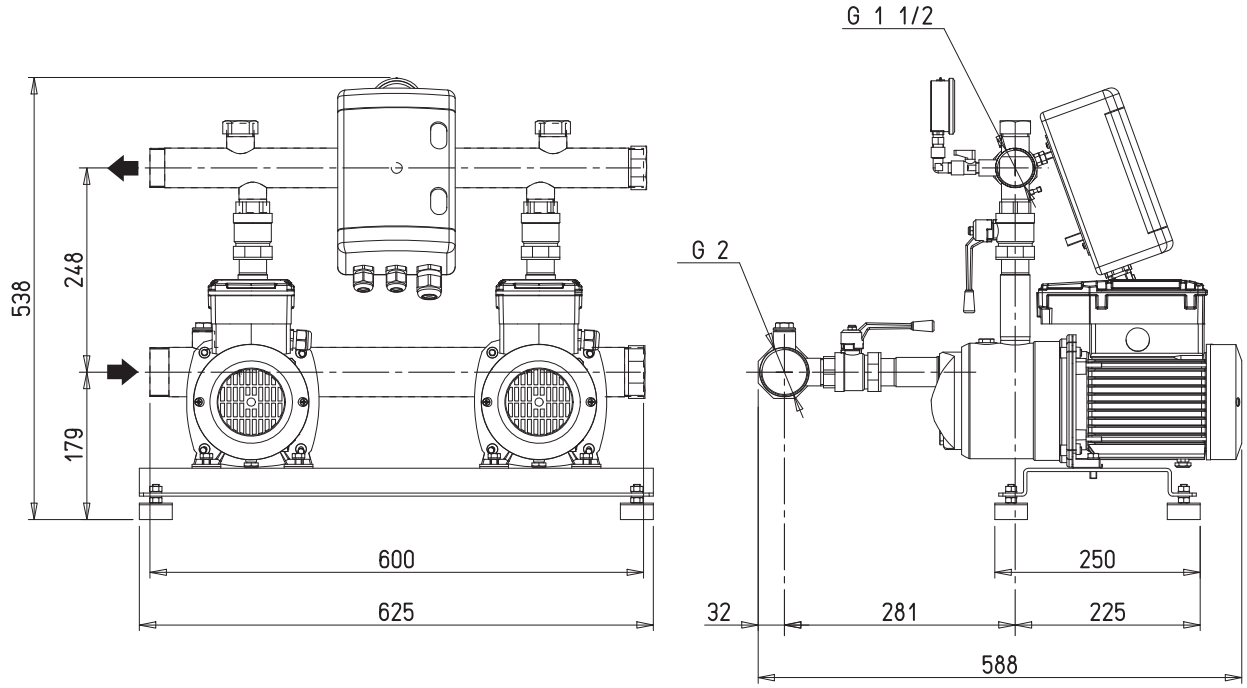

CALPEDA ROMANIA - INFINITY PUMPS SRL
Tel: 0268.33.47.47 / 0722.244.944
vanzari@calpeda.ro | www.calpeda.ro

Characteristic curves n ≈ 2800 1/min

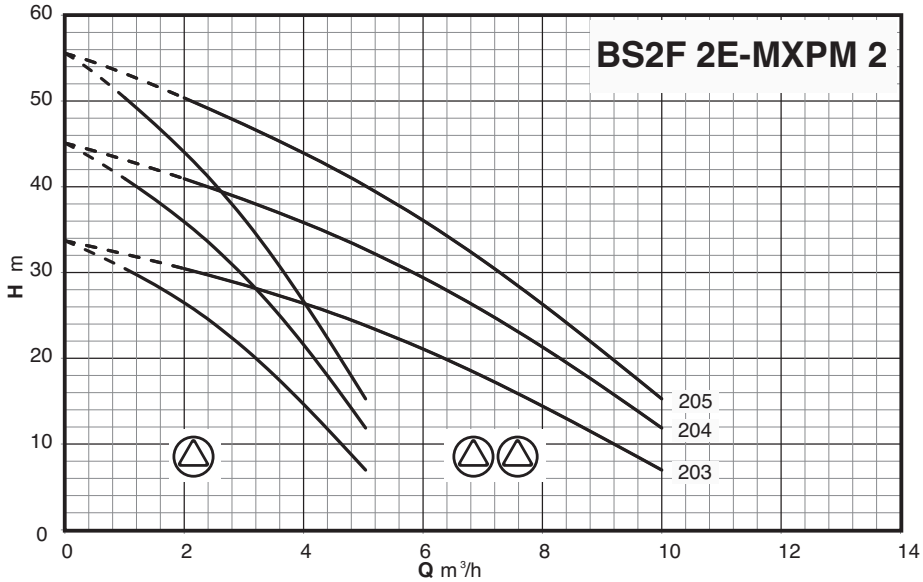

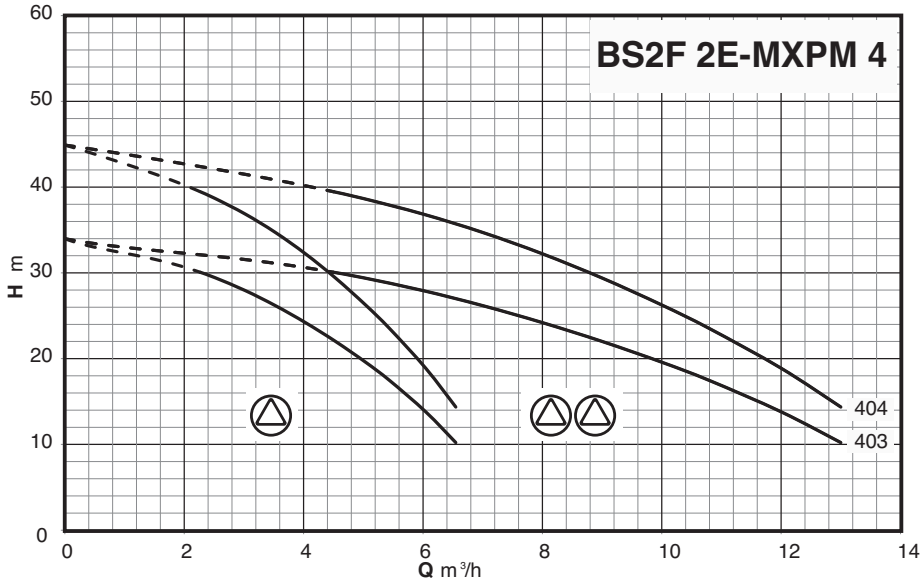

CALPEDA ROMANIA - INFINITY PUMPS SRL
Tel: 0268.33.47.47 / 0722.244.944
vanzari@calpeda.ro | www.calpeda.ro

NM, NMD

Close Coupled Centrifugal Pumps
with threaded ports

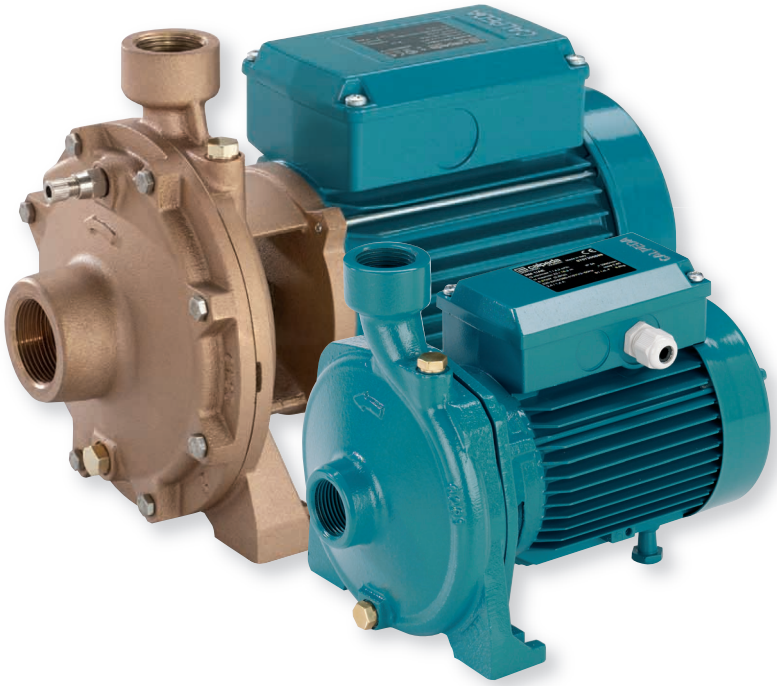

The electropumps NM, B-NM series comply with the European Regulation no. 547/2012.

Materials

Components		NM, NMD	B-NM, B-NMD
Pump casing Lantern bracket		Cast iron GJL 200 EN 1561	Bronze G-Cu Sn 10 EN 1982
Impeller		Brass P- Cu Zn 40 Pb 2 UNI 5705	
	NM 17	Cast iron GJL 200 EN 1561	Bronze G-Cu Sn 10 EN 1982
Shaft		Cr steel AISI 430	Cr Ni Mo steel AISI 316
		Cr Ni steel AISI 303 1,1 -1,5 - 2,2 kW	
	NM 6	Cr steel AISI 430	
Mechanical seal		Carbon - Ceramic - NBR	

Construction
Close-coupled, centrifugal pumps; electric motor with extended shaft directly connected to the pump.
NM: single-impeller
NMD: with two back-to-back impellers (with axial thrust balancing).
Connections: threaded ports ISO 228/1 (BS 2779).
NM, NMD: version with pump casing and lantern bracket in cast iron.
B-NM, B-NMD: version with pump casing and lantern bracket in bronze. (the pumps are supplied fully painted).

Applications
For clean liquids without abrasives, which are non-aggressive for the pump materials (solids content up to 0.2%).
For water supply.
For heating, air-conditioning, cooling and circulation plants.
For civil and industrial applications.
For fire fighting applications. For irrigation.

Operating conditions
Liquid temperature from -10 °C to +90 °C.
Ambient temperature up to 40° C.
Total suction lift up to 7 m.
Maximum permissible working pressure up to 10 bar
(16 bar for pumps NMD 25/190; NMD 32/210; NMD 40/180).
Continuous duty.

Motor
2-pole induction motor, 50 Hz (n ≈ 2900 rpm).
NM, NMD: three-phase 230/400 V ± 10% up to 3 kW;
400/690 V ± 10% from 4 to 9,2 kW;
NMM, NMDM: single-phase 230 V ± 10%, with thermal protector.
Insulation class F. Protection IP 54.
Motor suitable for operation with frequency converter from 1,1 kW.
Classification scheme IE3 for three-phase motors from 0,75 kW.
Constructed in accordance with EN 60034-1; EN 60034-30-1.
EN 60335-1, EN 60335-2-41.

Special features on request
- Other voltages. - Frequency 60 Hz (as per 60 Hz data sheet).
- Protection IP 55. - Special mechanical seal
- Higher or lower liquid or ambient temperatures.
- Motor suitable for operation with frequency converter up to 0,75 kW.

Coverage chart n ≈ 2900 rpm

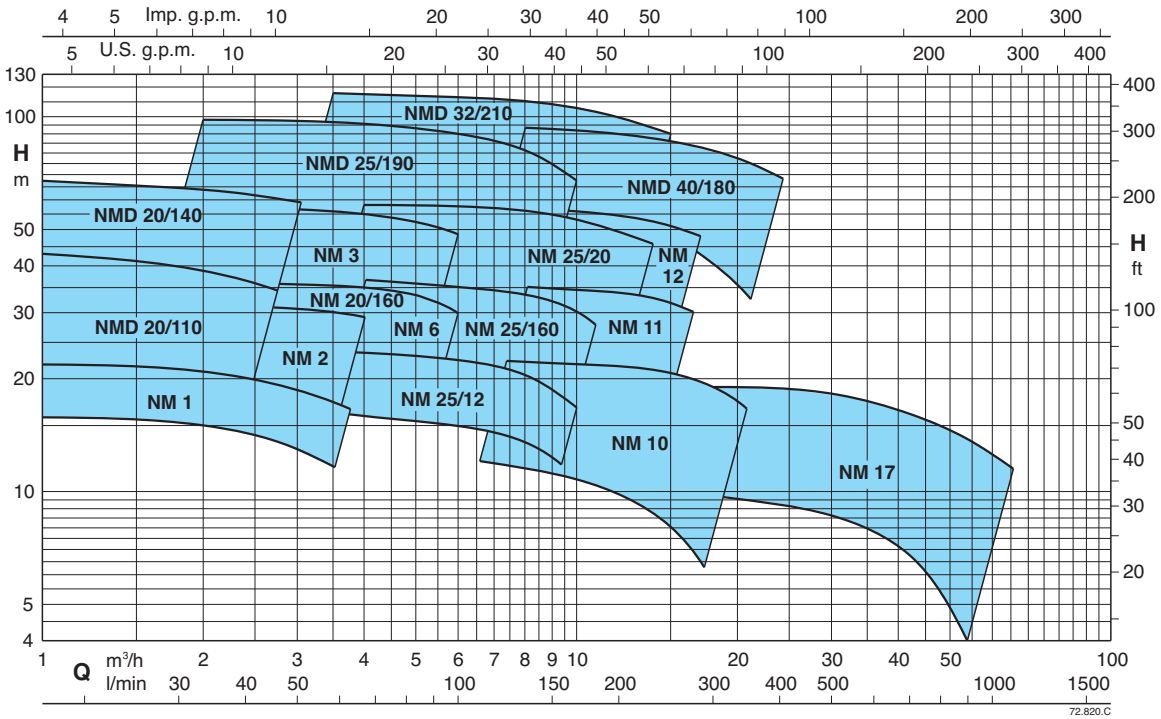

CALPEDA ROMANIA - INFINITY PUMPS SRL
Tel: 0268.33.47.47 / 0722.244.944
vanzari@calpeda.ro | www.calpeda.ro

NM, NMD

Close Coupled Centrifugal Pumps
with threaded ports

Performance n ≈ 2900 rpm

	NM	P_2 kW	P_2 HP	Q m³/h	1	1,2	1,5	1,89	2,4	3	3,6	4,2	4,8	5,4	6	6,6	7,5	8,4
				l/min	16	20	25	31,5	40	50	60	70	80	90	100	110	125	140
	NM 1/AE ●	0,37	0,5	H m	22	21,6	21,3	20,9	20,3	19,4	18,1	16,3						
	NM 2/B/A ●	0,55	0,75		27	26,5	26	25,5	25	24	23	22	20					
	NM 2/S/A ●	0,55	0,75		31	30,5	30	29	27,5	25,5	23,5	20	16					
	NM 2/A/B ●	0,75	1		33,5	33	32,5	32	31,5	30,5	29,5	28,5	27	26	24			
	NM 6/B ●	0,75	1					30,5	30	29,5	28,5	27,5	26,5	25,5	24	22	18	
	NM 6/A ●	1,1	1,5					35,5	35,2	34,7	34	33	32	30,5	29	27	23,5	19*
	NMM 3/CE	1,1	1,5			37,5	37,5	37	36,5	36	35	34	32					
	NM 3/C/A	1,1	1,5			37,5	37,5	37	36,5	36	35	34	32	30,5	28,5			
	NMM 3/BE	1,5	2			42	42	41,5	41	40,5	40	39	37	35	32			
	NM 3/B/A	1,5	2			47	47	46,5	46	45,5	45	44	43	41,5	40	37,5	33	26
	NMM 3/A/A	1,8	2,5			47,5	47,5	47	46,5	46	45,5	44,5	43,5	42	40,5	38	33,5	26,5
	NM 3/A/B	2,2	3			56	55,5	55,5	55	54,5	53,5	52,5	51,5	50	48	46	42	36

B-NM B-NMD	NM NMD	P_2 kW	P_2 HP	Q m³/h	1	1,2	1,5	1,89	2,4	3	3,6	4,2	4,8	5,4	6	6,6	7,5	8,4
				l/min	16	20	25	31,5	40	50	60	70	80	90	100	110	125	140
B-NMD 20/110B/A ●	NMD 20/110B/A ●	0,45	0,6	H m	33	32	31	29	26,5	23	18							
B-NMD 20/110Z/A ●	NMD 20/110Z/A ●	0,55	0,75		37	36	35	33	30,5	27,5	23	18						
B-NMD 20/110A/B ●	NMD 20/110A/B ●	0,75	1		43	42	40,5	39	36,5	33	29	25						
B-NMDM 20/140BE	NMDM 20/140BE	1,1	1,5		52	51,5	51	50	48,5	47	45							
B-NMD 20/140B/A	NMD 20/140B/A	1,1	1,5		53	52,5	52	51	50	48	46	43,5	40					
B-NMDM 20/140AE	NMDM 20/140AE	1,5	2		57,5	57	56,5	55,5	54	51,5	49	46	43	40	36			
B-NMD 20/140A/A	NMD 20/140A/A	1,5	2		67	66,5	66	64,5	63	61,5	59	57	53,5	50	46			
B-NM 20/160BE ●	NM 20/160BE ●	0,75	1					30,5	30	29,5	28,5	27,5	26,5	25,5	24	22		
B-NM 20/160A/A ●	NM 20/160A/A ●	1,1	1,5					36	35,5	35	34,5	33,5	32	30,5	29	27		

B-NM B-NMD	NM NMD	P_2 kW	P_2 HP	Q m³/h	2,4	3	3,6	4,8	6	6,6	7,5	8,4	9,6	10,8	12	13,2	15	16,8	18
				l/min	40	50	60	80	100	110	125	140	160	180	200	220	250	280	300
B-NM 25/12B/A ●	NM 25/12B/A ●	0,55	0,75	H m	20	19,9	19,8	19,3	18,5	18	17,3	16,3	15	13,2	11				
B-NM 25/12A/B ●	NM 25/12A/B ●	0,75	1		23,5	23,4	23,3	22,9	22,1	21,7	20,9	20	18,7	17,1	15,2				
B-NM 25/160B/A ●	NM 25/160B/A ●	1,1	1,5			31	30,7	30	28,5	28	27	26	23						
B-NM 25/160A/A ●	NM 25/160A/A ●	1,5	2			36,5	36,2	35,5	34,5	34	33,5	32,5	31	28,5	26				
B-NM 25/200B/C	NM 25/20B/C	2,2	3			42,6	42,3	41,8	41,1	40,7	40,2	39,6	38,6	37,6	36,3	34,7			
B-NM 25/200A/B	NM 25/20A/B	3	4			50,3	50,2	49,8	49,3	49	48,6	48,1	47,3	46,5	45,5	44,3	42,1	38,9	
B-NM 25/200S/C	NM 25/20S/C	4	5,5			57,8	57,7	57,4	57,2	57	56,7	56,4	55,8	55,2	54,3	53,3	51,2	48,2	45,6
B-NMD 25/190C/B	NMD 25/190C/B	2,2	3		62	60,5	59	55,5	51	48,5	44	38							
B-NMD 25/190B/A	NMD 25/190B/A	3	4		76	75	74	70	66	64	60	54	46						
B-NMD 25/190A/B	NMD 25/190A/B	4	5,5		98	97	96	93,5	90	88	84	79	70						

	NM	P_2 kW	P_2 HP	Q m³/h	6,6	7,5	8,4	9,6	10,8	12	13,2	15	16,8	18,9	21	24	27	30
				l/min	110	125	140	160	180	200	220	250	280	315	350	400	450	500
	NM 10/FE ●	0,55	0,75	H m	12,5	12,5	12	11,5	11	10	9	7,5						
	NM 10/DE ●	0,75	1		18	18	17,5	17	16,5	16	15,5	14						
	NM 10/A/A ●	1,1	1,5		23	23	22,5	22	21,5	21	20,5	19						
	NM 10/S/A ●	1,5	2		23,5	23,5	23	22,5	22	21,5	21	20,5	19	18,5	16,5	13		
	NMM 11/BE	1,5	2		26,5	25,5	25	24	23	22,5	21,5	19,5	17,5					
	NM 11/B/A	1,5	2		29,5	29,5	29	28,5	27,5	27	26	25*	22,5*					
	NMM 11/A	1,8	2,5		30,2	30,1	29,8	29,4	28,8	28,1	27,4	26	24,5					
	NM 11/A/B	2,2	3		35,5	35,5	35	34,5	34	33,5	33	32*	30*					
	NM 12/D/B	2,2	3		38	37,5	37	36	35	33,5	32							
	NM 12/C/A	3	4		45	44,5	44	43,5	42,5	41	40	38	36					
	NM 12/A/B	4	5,5		57,5	57	56	55,5	55	54,5	53,5	51,5	49					

CALPEDA ROMANIA - INFINITY PUMPS SRL
Tel: 0268.33.47.47 / 0722.244.944
vanzari@calpeda.ro | www.calpeda.ro

NM, NMD

Close Coupled Centrifugal Pumps
with threaded ports

Performance n ≈ 2900 rpm

B-NMD	NMD	P2 kW	P2 HP	Q m³/h	5,4	6	6,6	7,5	8,4	9,6	10,8	12	13,2	15	16,8	18,9	21	24
				l/min	90	100	110	125	140	160	180	200	220	250	280	315	350	400
B-NMD 32/210D/B	NMD 32/210D/B	4	5,5	H m	71	69	67,5	65	62,5	58	53	46	37*					
B-NMD 32/210C/A	NMD 32/210C/A	5,5	7,5		84	83	82	81	79	76	73	69	64*	54*				
B-NMD 32/210B/A	NMD 32/210B/A	7,5	10		104	103	102	100	98	95	92	88	84*	76*				
B-NMD 32/210A/B	NMD 32/210A/B	9,2	12,5		114	113	112	110	108	105	103	99	96*	90*				
B-NMD 40/180D/B	NMD 40/180D/B	4	5,5					60	59,5	57	56	53	51,5	48	44	39	34*	25*
B-NMD 40/180C/A	NMD 40/180C/A	5,5	7,5					69	68	67	66	64,5	63	60	57	53	48*	40*
B-NMD 40/180B/A	NMD 40/180B/A	7,5	10					87	86	85	84	82,5	81	78	75	71	66*	59*
B-NMD 40/180A/B	NMD 40/180A/B	9,2	12,5					94	93	92	91	89,5	88	85	82	78	74*	67*

B-NM	NM	P2 kW	P2 HP	Q m³/h	21	24	27	30	33	37,8	42	48	54	60	66	75	84	96
				l/min	350	400	450	500	550	630	700	800	900	1000	1100	1250	1400	1600
B-NM 17/H/A●	NM 17/H/A●	1,1	1,5	H m	9,5	9,2	9	8,6	8,2	7,5	6,7	5,5	3,5*					
B-NM 17/G/A●	NM 17/G/A●	1,5	2		12	11,7	11,5	11,2	11	10,3	9,7	8,5	7*	4*				
B-NM 17/F/B	NM 17/F/B	2,2	3			16	16	15,5	15	14,5	14	13	11,5*	10*	8*			
B-NM 17/D/A	NM 17/D/A	3	4				18	18	17,5	17	16,5	15,5	14*	13*	11,5*			

NM, NMD Standard construction.
B-NM, B-NMD Bronze construction.

P2 Rated motor power output.
H Total head in m.

● With single-phase motor = NMM - NMDM.
* Maximum suction lift 1-2 m.
Tolerances according to UNI EN ISO 9906:2012

Rated currents

	P1 kW	P2 kW	P2 HP	230 V 1~ IN A	IA/IN
	0,62	0,37	0,5	3	2,7
	0,72	0,45	0,6	3,6	2,9
	1	0,55	0,75	4,5	2,3
* NMM 25/12B/A	0,9	0,55	0,75	4,2	2,5
* NMM 10/FE	0,9	0,55	0,75	4,2	2,5
	1,3	0,75	1	6	3
* NMM 25/12A/A	1,2	0,75	1	5,4	3,3
* NMm 10/DE	1,2	0,75	1	5,8	2,6
	1,6	1,1	1,5	7,4	3
	2	1,5	2	9,2	3,8
	2,5	1,8	2,5	11,2	4,5

	P2 kW	P2 HP	230 V Δ / 400 V Y IN A	400 V Δ / 690 V Y IN A	IN A	IA/IN
	0,37	0,5	2,3	1,3		3,8
	0,45	0,6	2,3	1,3		3,5
	0,55	0,75	3	1,7		3,6
* NM 25/12B/A	0,55	0,75	2,8	1,6		3,9
* NM 10/FE	0,55	0,75	4	2,3		4,8
	0,75	1	3,7	2,2		5,5
* NM 25/12A/B	0,75	1	3,5	2		6,1
* NM 10/DE	0,75	1	4	2,3		6,1
	1,1	1,5	4,6	2,7		5,5
	1,5	2	7,5	4,3		6,1
	2,2	3	9,15	5,3		8,4
	3	4	11,5	6,6		8,2
	4	5,5		9,6	5,5	8,9
	5,5	7,5		10,9	6,3	9,1
	7,5	10		14,3	8,3	9,1
	9,2	12,5		18,5	10,7	8,2

P1 Maximum power input.
P2 Rated motor power output.
IA/IN D.O.L. starting current / Nominal current

CALPEDA ROMANIA - INFINITY PUMPS SRL
Tel: 0268.33.47.47 / 0722.244.944
vanzari@calpeda.ro | www.calpeda.ro

NM

Close Coupled Centrifugal Pumps
with threaded ports

Characteristic curves n ≈ 2900 rpm

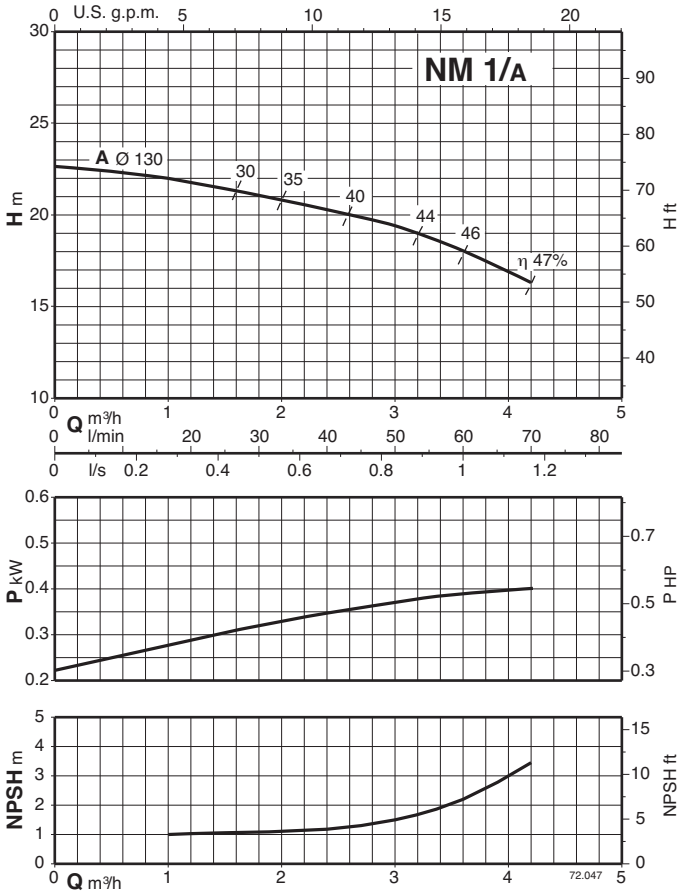

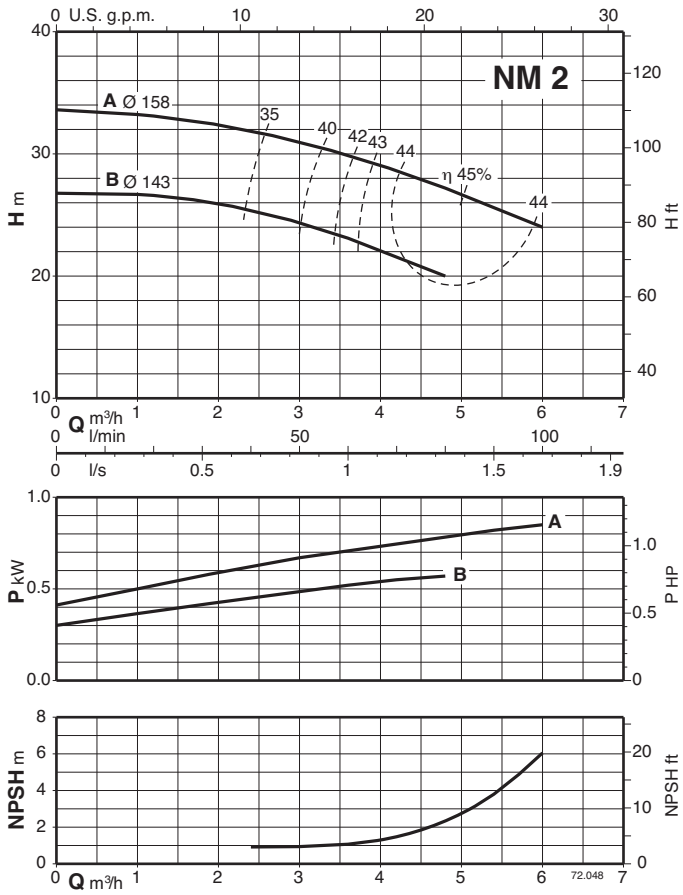

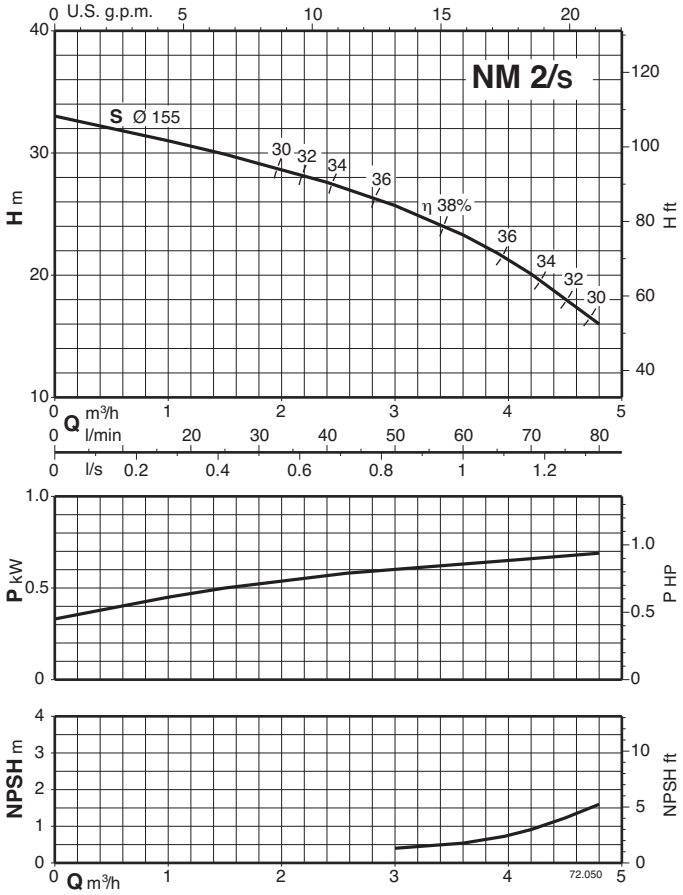

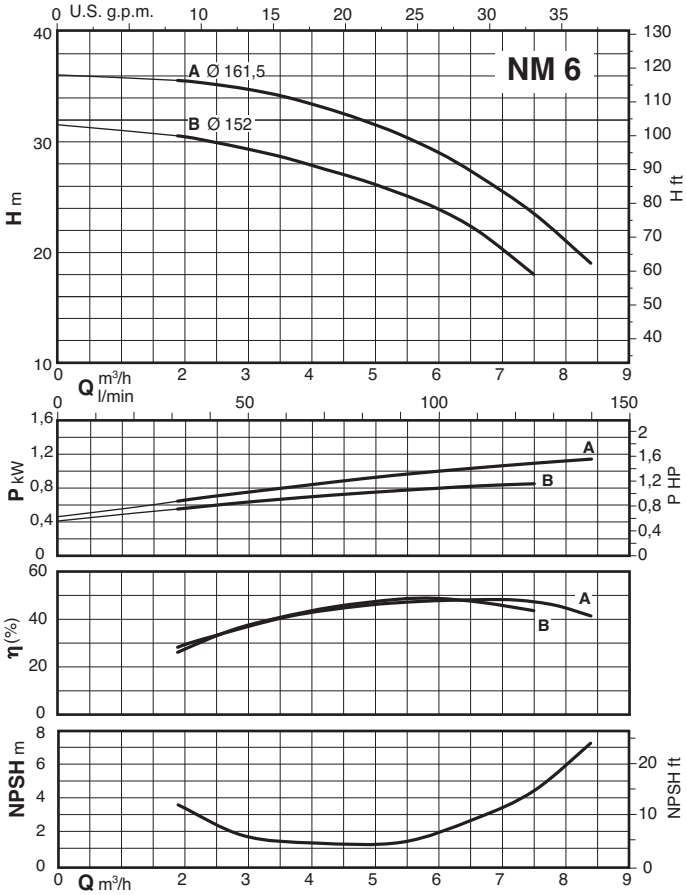

CALPEDA ROMANIA - INFINITY PUMPS SRL
Tel: 0268.33.47.47 / 0722.244.944
vanzari@calpeda.ro | www.calpeda.ro

NM

Close Coupled Centrifugal Pumps
with threaded ports

Characteristic curves n ≈ 2900 rpm

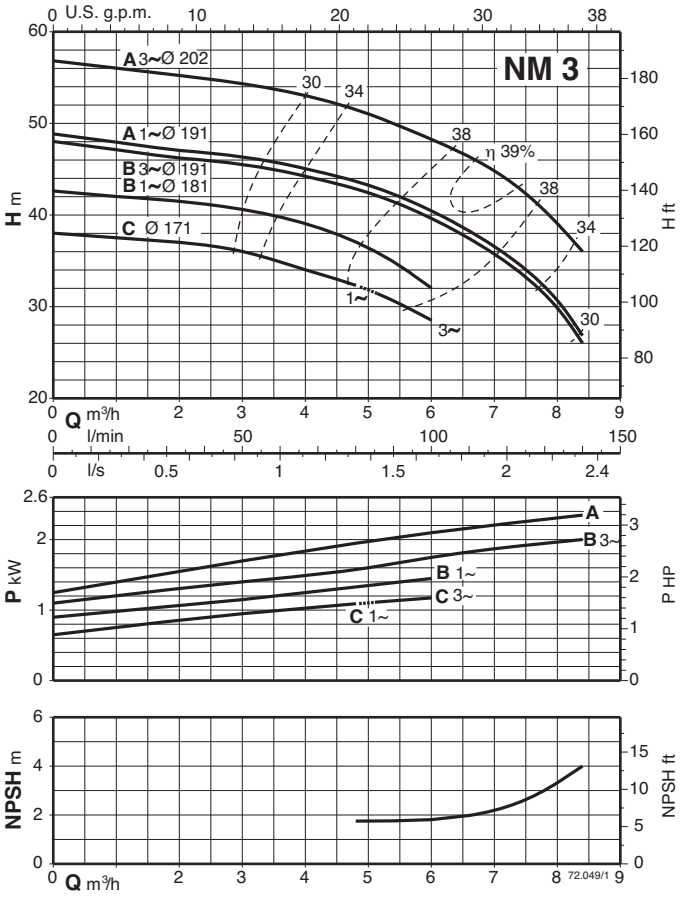

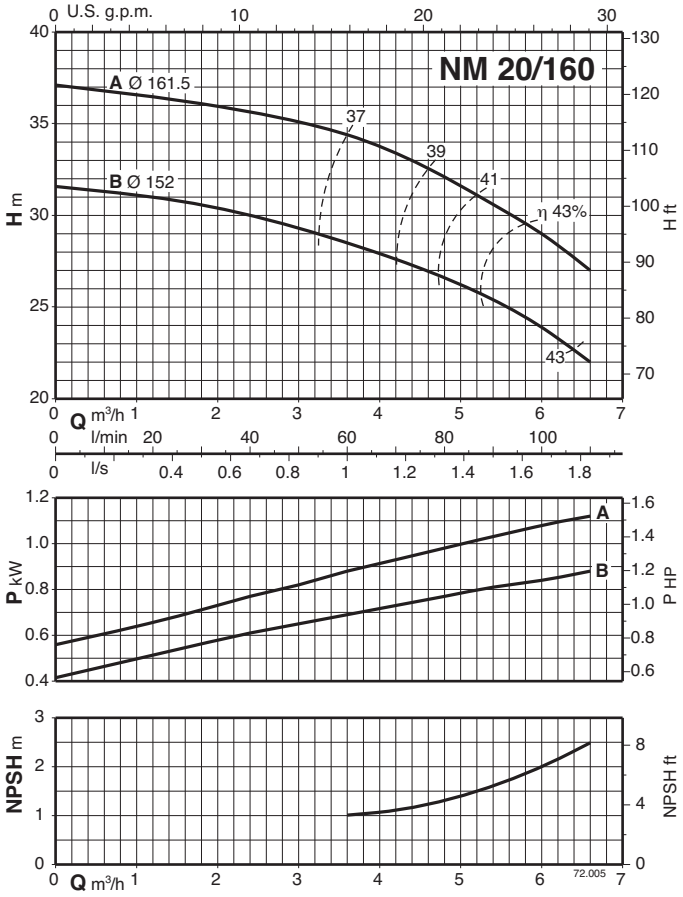

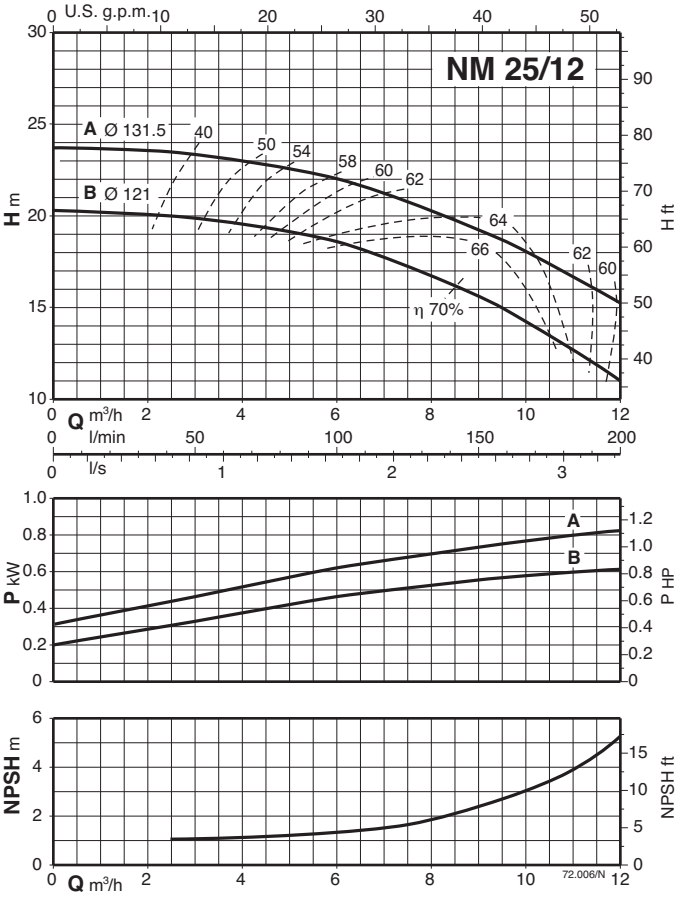

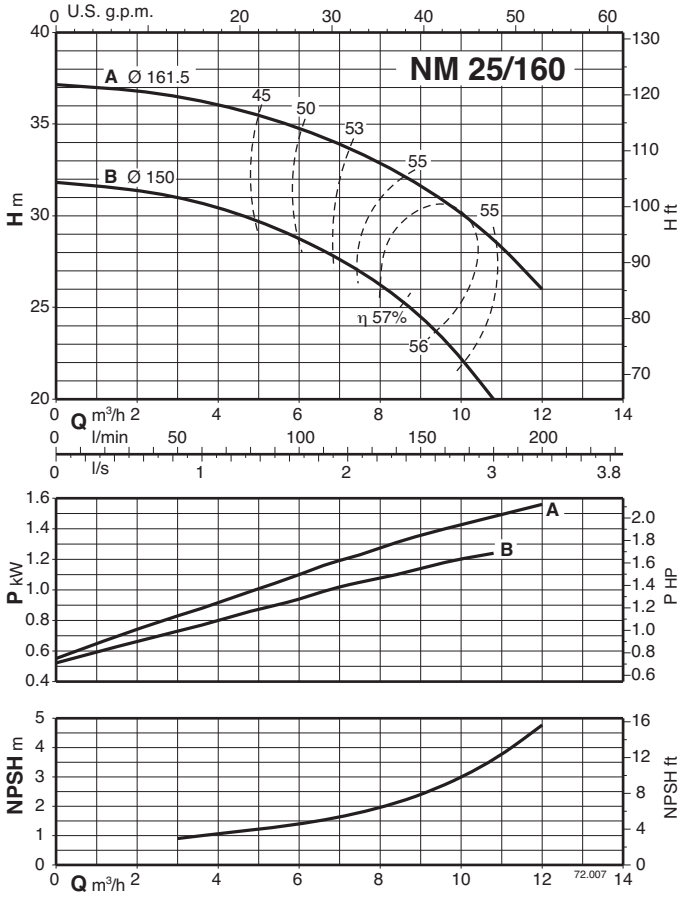

CALPEDA ROMANIA - INFINITY PUMPS SRL
Tel: 0268.33.47.47 / 0722.244.944
vanzari@calpeda.ro | www.calpeda.ro

NM

Close Coupled Centrifugal Pumps
with threaded ports

Characteristic curves n ≈ 2900 rpm

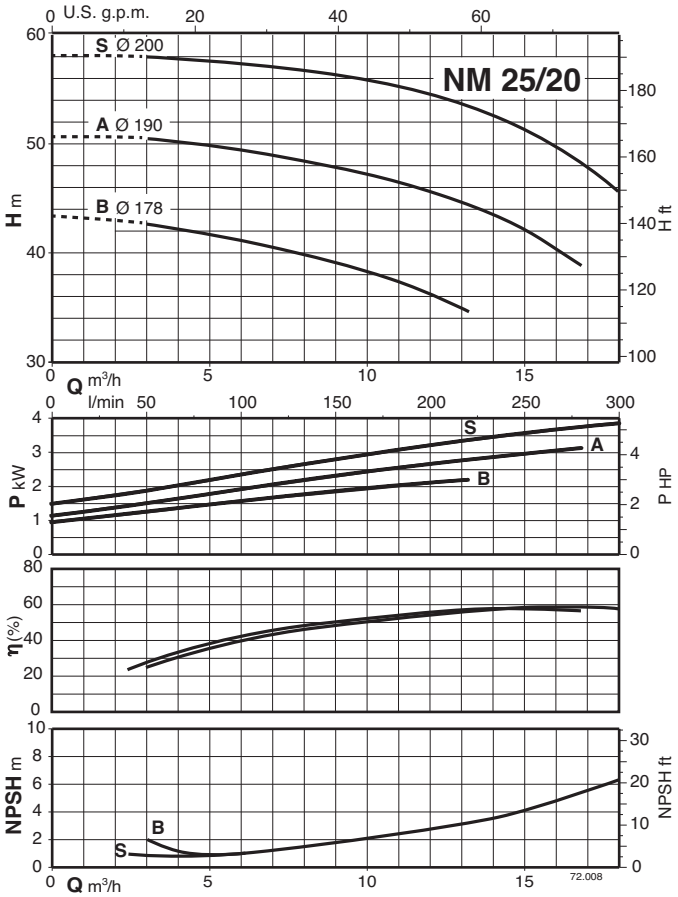

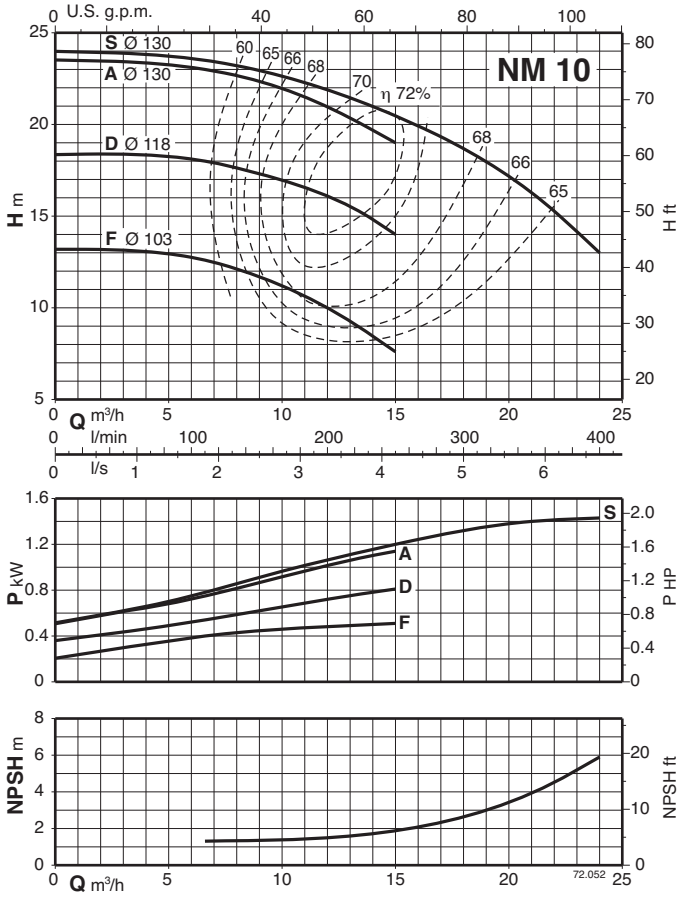

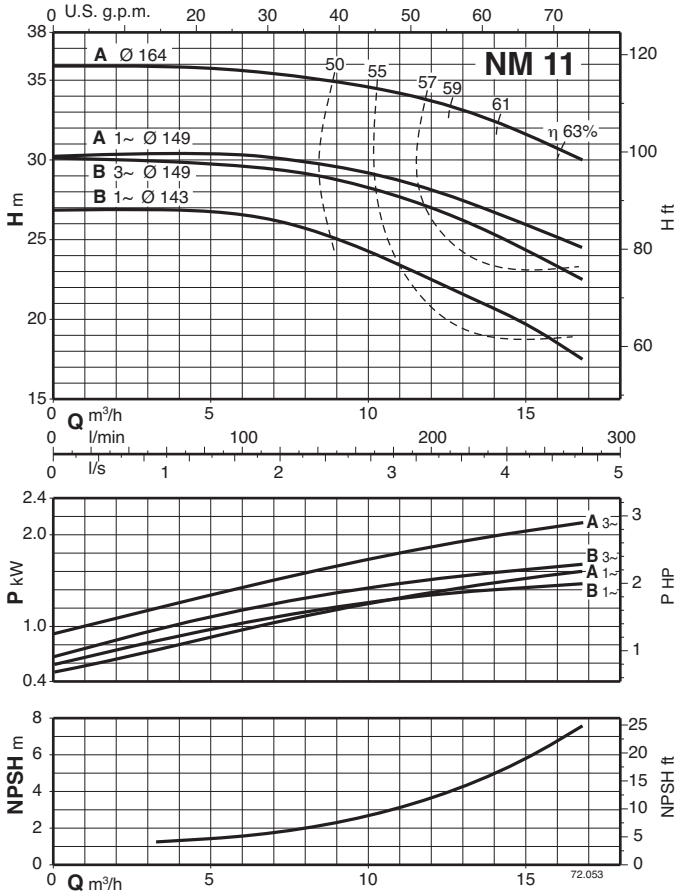

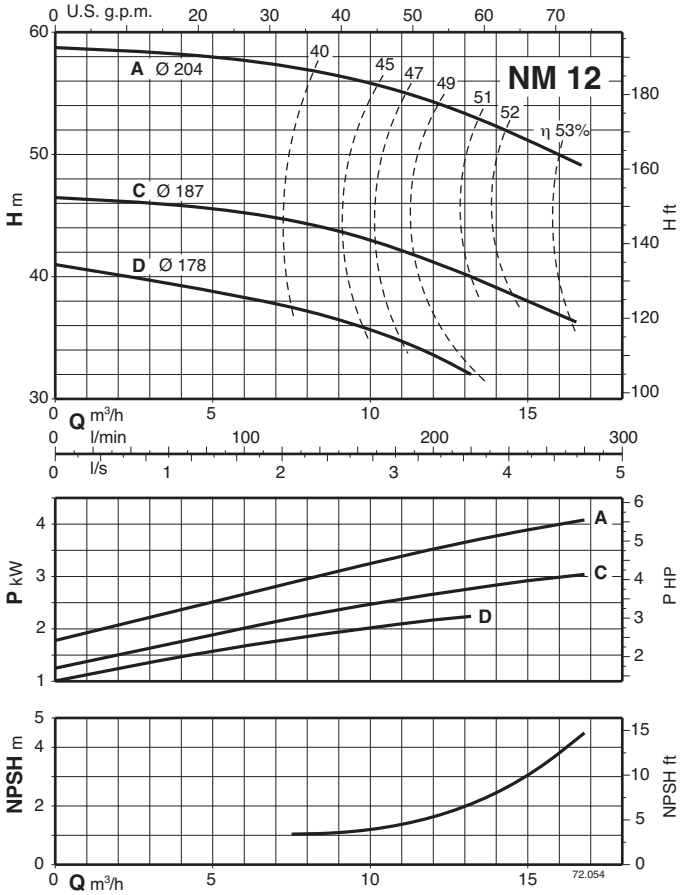

CALPEDA ROMANIA - INFINITY PUMPS SRL
Tel: 0268.33.47.47 / 0722.244.944
vanzari@calpeda.ro | www.calpeda.ro

NMD

Close Coupled Centrifugal Pumps
with threaded ports

Characteristic curves n ≈ 2900 rpm

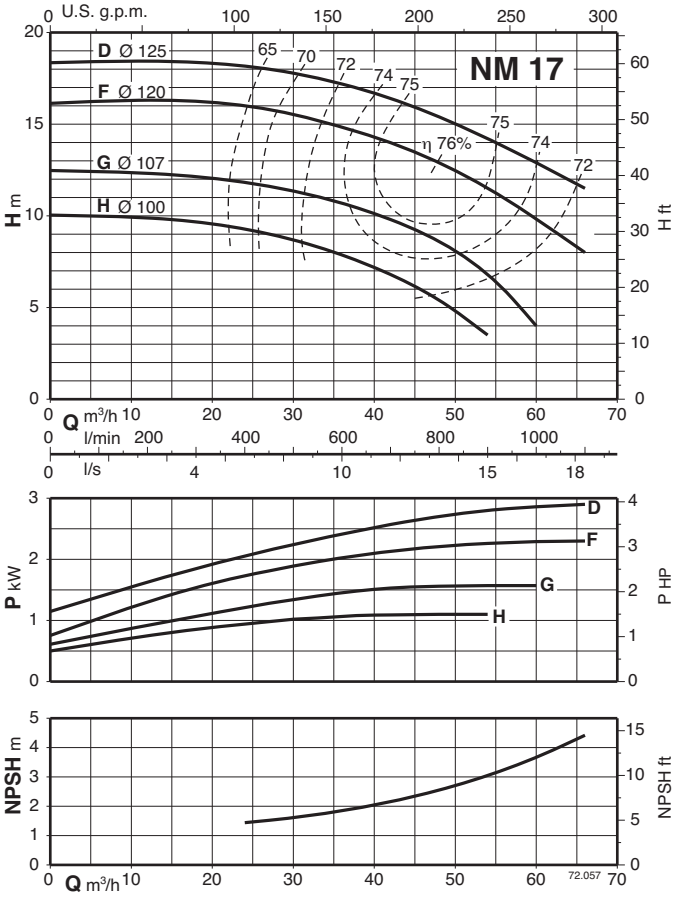

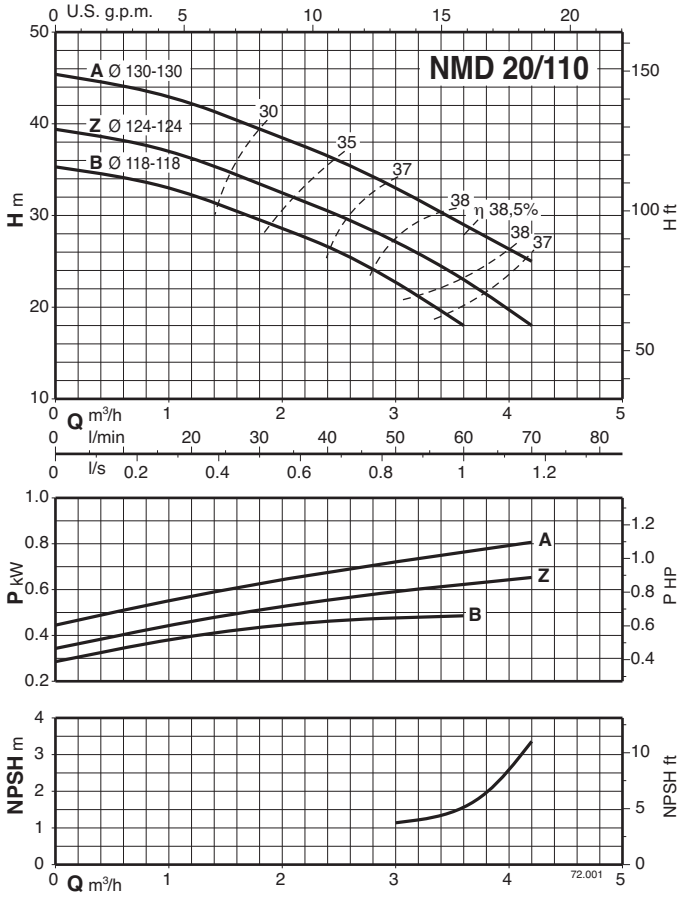

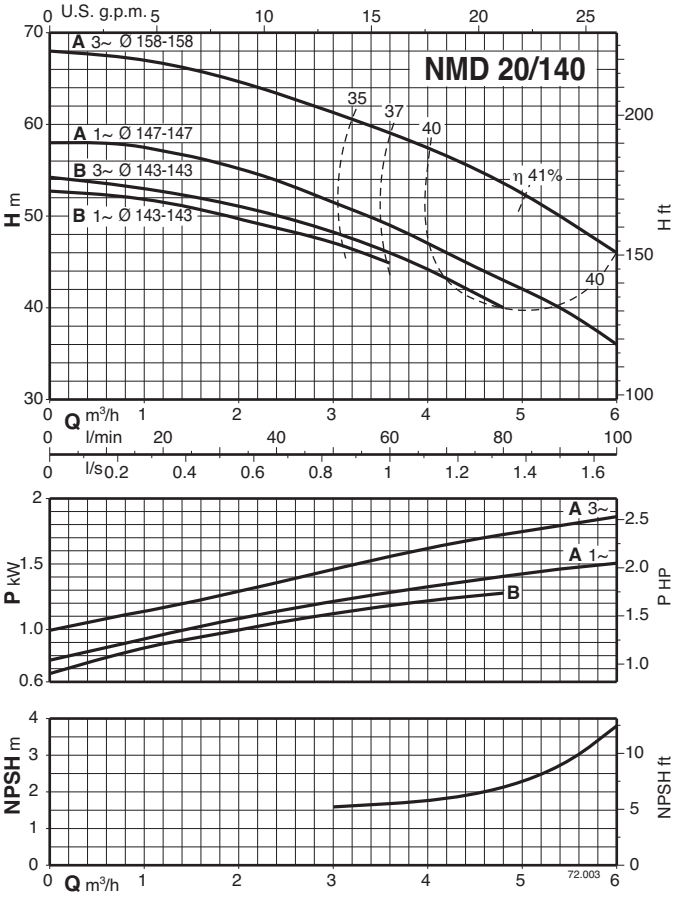

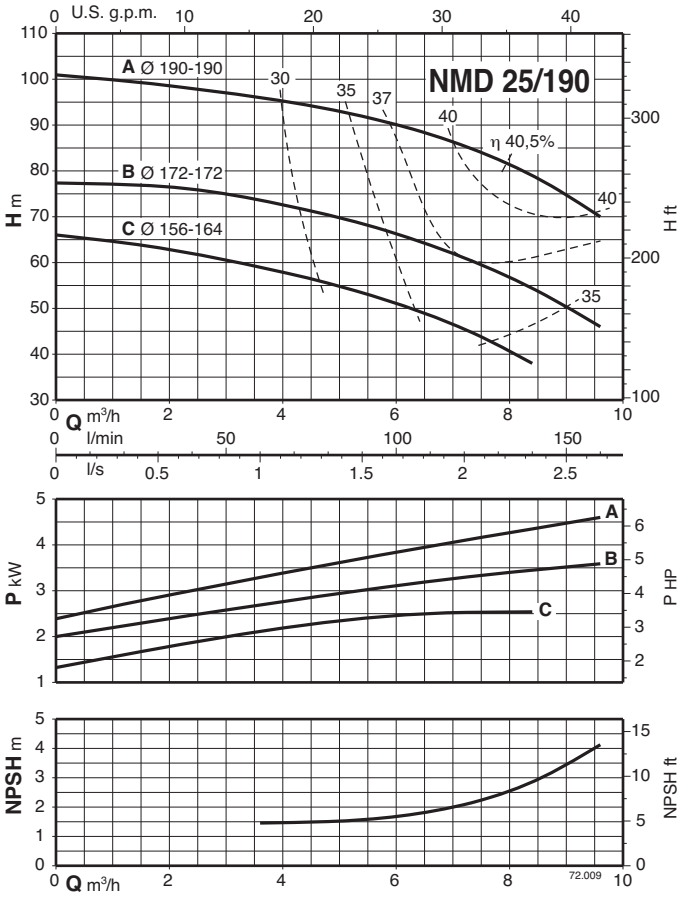

CALPEDA ROMANIA - INFINITY PUMPS SRL
Tel: 0268.33.47.47 / 0722.244.944
vanzari@calpeda.ro | www.calpeda.ro

NMD

Close Coupled Centrifugal Pumps
with threaded ports

Characteristic curves n ≈ 2900 rpm

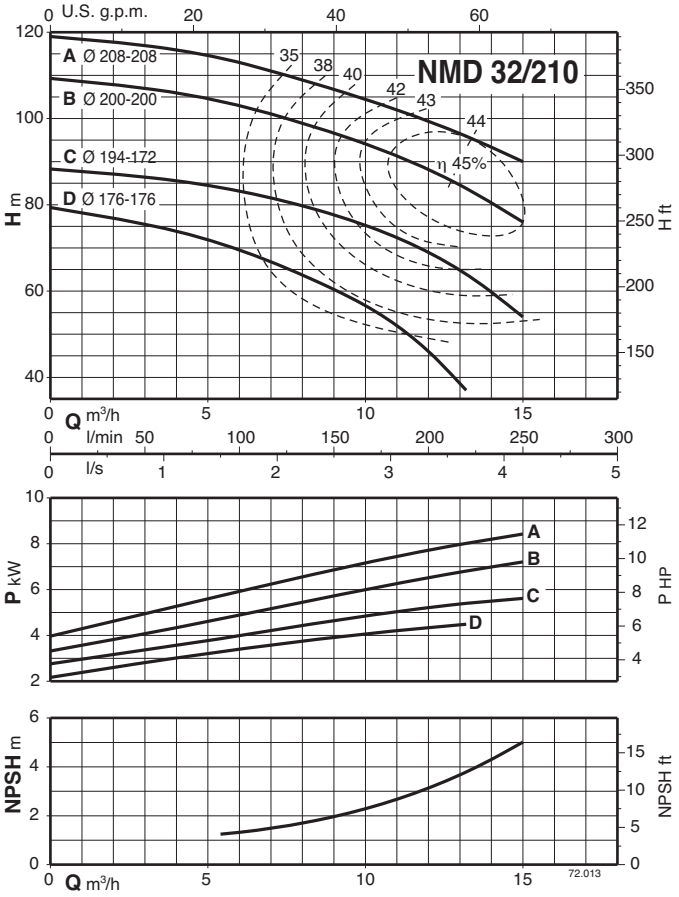

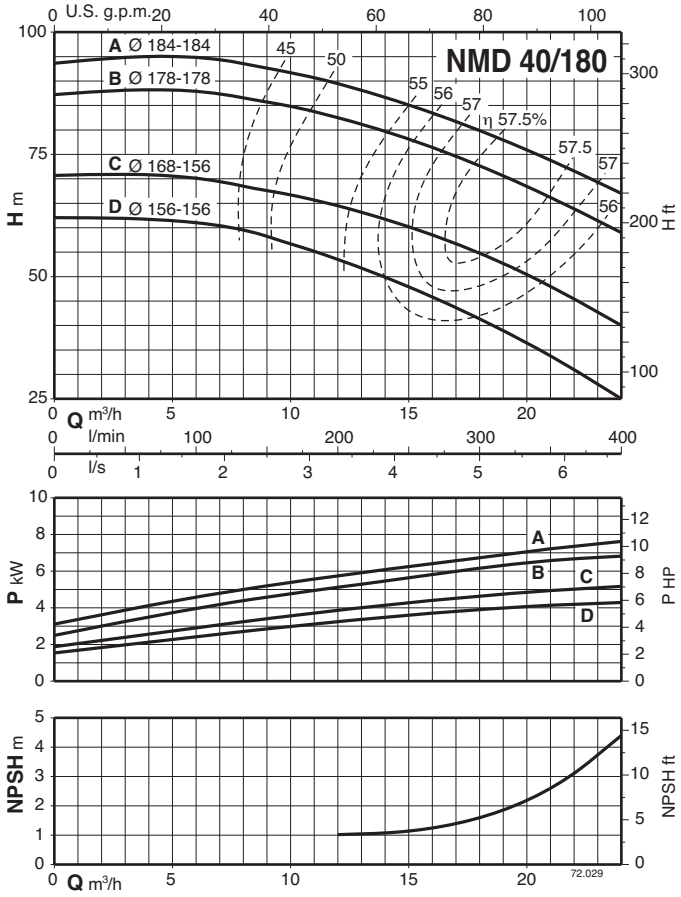

CALPEDA ROMANIA - INFINITY PUMPS SRL
Tel: 0268.33.47.47 / 0722.244.944
vanzari@calpeda.ro | www.calpeda.ro

NM

Close Coupled Centrifugal Pumps
with threaded ports

Dimensions and weights

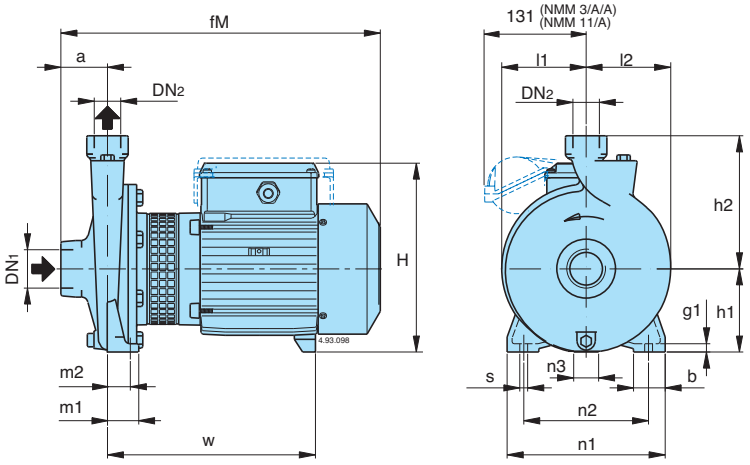

TYPE	NMM kg	NM kg	B-NM kg
NM 1/AE	8,7	8,6	
NM 2/B/A	14	13,1	
NM 2/S/A	14,2	13,3	
NM 2/A/B	15,1	15	
NM 6/B	17,8	17,6	
NM 6/A	19,3	19	
NM 3/C/A	24	22,9	
NM 3/B/A	26	25,1	
NM 3/A/B	30,4	29,1	
B- **NM 20/160BE**	19,9	18,4	21
B- **NM 20/160A/A**	20,7	19,7	22,5
B- **NM 25/12B/A**	13,2	12,3	13,5
B- **NM 25/12A/B**	14,2	14,1	15,3
B- **NM 25/160B/A**	20,4	19,7	22,8
B- **NM 25/160A/A**	22,5	21,5	24
NM 25/20B/C		31,6	
NM 25/20A/B		40,9	
NM 25/20S/C		42,2	
B- NM 25/200B/C			35,7
B- NM 25/200A/C			43,7
B- NM 25/200S/C			45,2
NM 10/FE	19,3	18,5	
NM 10/DE	19,4	18,8	
NM 10/A/A	20,2	19,3	
NM 10/S/A	22,1	21,5	
NM 11/B/A	24,7	24,1	
NM 11/A/B		28,1	
NM 12/D/B		33,5	
NM 12/C/A		42	
NM 12/A/B		43,5	
B- NM 17/H/A	23	22,2	29,2
B- NM 17/G/A	24,2	23,2	30,2
B- NM 17/F/B		28,2	35,2
B- NM 17/D/A		36,2	43,2

B-NM	NM	DN_1	DN_2	mm															
		ISO 228		a	fM	h1	h2	H	m1	m2	n1	n2	n3	b	s	l1	l2	w	g1
	NM 1/AE	G 1	G 1	40	261	80	132	176	40	32	170	140	17	35	9,5	77	81	171	10
	NM 2/A/B-S/A-B/A	G 1	G 1	45	305	95	150	207	40	32	190	160	17	35	9,5	87	90	203	10
	NM 6/A-B	G 1 1/4	G 1	53	349	100	150	213	37,5	27,5	190	150	17	38	9,5	102	102	225	10
	NM 3/B/A-C/A **NM 3/A/B**	G 1	G 1	50	375 415	112	180	240	55	43	245	205	37	45	11,5	110	113	244 284	12
B-NM 20/160A/A-BE	**NM 20/160A/A-BE**	G 1 1/4	G 3/4	53	375	100	150	228	37,5	27,5	190	150	30	38	9,5	102	102	246	10
B-NM 25/12A/B-B/A	**NM 25/12A/B-B/A**	G 1 1/2	G 1	56	313	90	140	199	37,5	27,5	170	130	9	38	9,5	85	88	195	10
B-NM 25/160A/A-B/A	**NM 25/160A/A-B/A**	G 1 1/2	G 1	56	380	100	160	228	37,5	27,5	190	150	30	38	9,5	102	102	246	10
	NM 25/20B/C **NM 25/20A/B-S/C**	G 1 1/2	G 1	63	433 460	125	180	253 263	45	32,5	245	200	49 42	45	11,5	125	125	291 295	11
B-NM 25/200B/C **B-NM 25/200A/B-S/C**		G 1 1/2	G 1	63	445 460	125	180	253 263	45	32,5	245	200	49 42	45	11,5	125	125	303 295	11
	NM 10/S/A-A/A-DE-FE	G 2	G 1 1/4	63	382	100	150	228	50	35	190	140	30	50	13	90	97	239	14
	NM 11/B/A **NM 11/A/B**	G 2	G 1 1/4	70	400 440	112	170	240	50	35	210	160	37	50	15	103	110	247 287	14
	NM 12/D/B **NM 12/A/B-C/A**	G 2	G 1 1/4	70	440 470	132	190	260 270	50	35	240	190	47 45	50	15	125	127	287 300	14
B-NM 17/G/A-H/A **B-NM 17/F/B** **B-NM 17/D/A**	**NM 17/G/A-H/A** **NM 17/F/B** **NM 17/D/A**	G 2 1/2	G 2 1/2	80	417 463 480	112	160	240 240 250	50	35	210	160	37 37 20	50	14	96	113	257 304 295	14

CALPEDA ROMANIA - INFINITY PUMPS SRL
Tel: 0268.33.47.47 / 0722.244.944
vanzari@calpeda.ro | www.calpeda.ro

NMD

Close Coupled Centrifugal Pumps
with threaded ports

Dimensions and weights

NMD 20/110

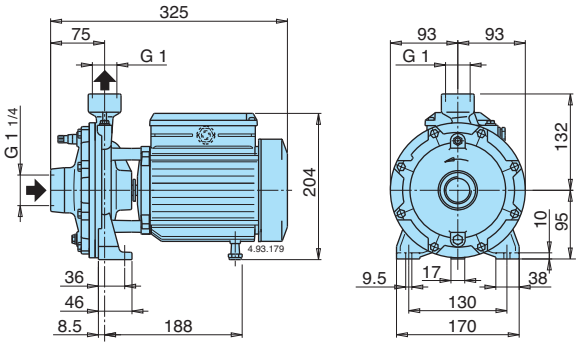

TYPE	NMDM kg	NMD kg	B-NMD kg
B- **NMD 20/110B/A**	13	12,1	13,4
B- **NMD 20/110Z/A**	14	13	14,2
B- **NMD 20/110A/B**	15,1	14,2	17,4

NMD 20/140
NMD 25/190

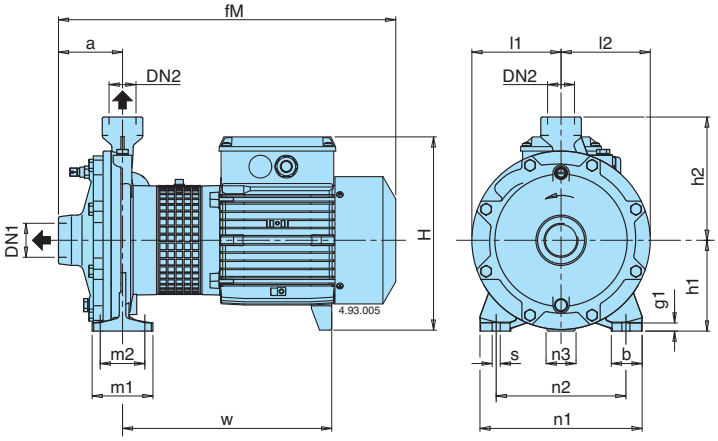

TYPE	NMDM kg	NMD kg	B-NMD kg
B- **NMD 20/140B/A**	23,9	22,7	25,2
B- **NMD 20/140A/A**	25,2	24,8	27,6
B- **NMD 25/190C/B**		42	45,7
B- **NMD 25/190B/A**		49,7	54
B- **NMD 25/190A/B**		51,5	55,5

B-NMD	NMD	DN1 ISO 228	DN2 ISO 228	mm															
				a	fM	h1	h2	H	m1	m2	n1	n2	n3	b	s	l1	l2	w	g1
B- NMD 20/140A/A-B/A	NMD 20/140A/A-B/A	G 1 1/4	G 1	80	417	112	152	243	75	55	200	160	37	38	9,5	110	110	256	10
B- NMD 25/190C/B	NMD 25/190C/B	G 1 1/2	G 1	97	487	140	180	268	100	70	240	190	50	50	14	133	133	314	13
B- NMD 25/190A/B-B/B	NMD 25/190A/B-B/A				500			278					49					306	

NMD 32/210
NMD 40/180

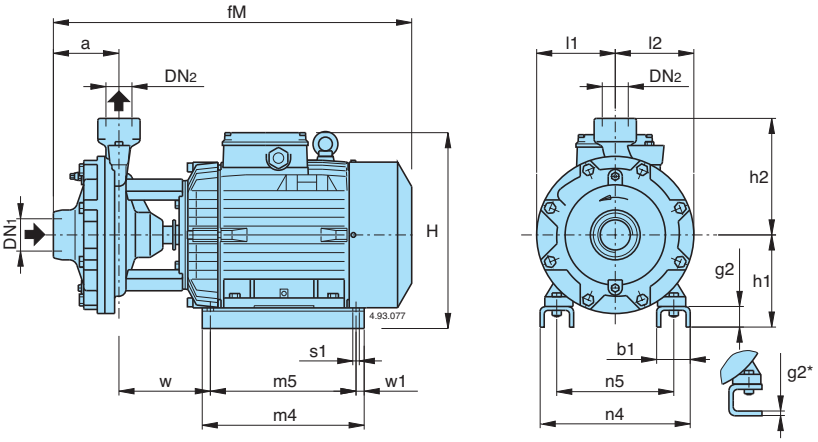

TYPE	NMD kg	B-NMD kg
B- **NMD 32/210D/B**	60,5	66,5
B- **NMD 32/210C/A**	71	77
B- **NMD 32/210B/A**	77	82,5
B- **NMD 32/210A/B**	99	105
B- **NMD 40/180D/B**	59,5	65,5
B- **NMD 40/180C/A**	70	76
B- **NMD 40/180B/A**	76	81,5
B- **NMD 40/180A/B**	97	102

B-NMD	NMD	DN1 ISO 228	DN2 ISO 228	mm															
				a	fM	h1	h2	H	m4	m5	n4	n5	w1	b1	s1	l1	l2	w	g2
B- NMD 32/210D/B	NMD 32/210D/B				530	155		293	205	175	194	140		54	10			139	6*
B- NMD 32/210B/A -C/A	NMD 32/210B/A -C/A	G 2	G 1 1/4	110	550	150	215	310	280	250	258	190	15	68	12	150	150	108	38
B- NMD 32/210A/B	NMD 32/210A/B				625	170		355	298	268	286	216		70	12			152	38
B- NMD 40/180D/B	NMD 40/180D/B				535	155		293	205	175	194	140		54	10			133	6*
B- NMD 40/180B/A -C/A	NMD 40/180B/A -C/A	G 2	G 1 1/2	121	555	150	215	310	280	250	258	190	15	68	12	145	145	102	38
B- NMD 40/180A/B	NMD 40/180A/B				630	170		355	298	268	286	216		70	12			145	38

CALPEDA ROMANIA - INFINITY PUMPS SRL
Tel: 0268.33.47.47 / 0722.244.944
vanzari@calpeda.ro | www.calpeda.ro

Features

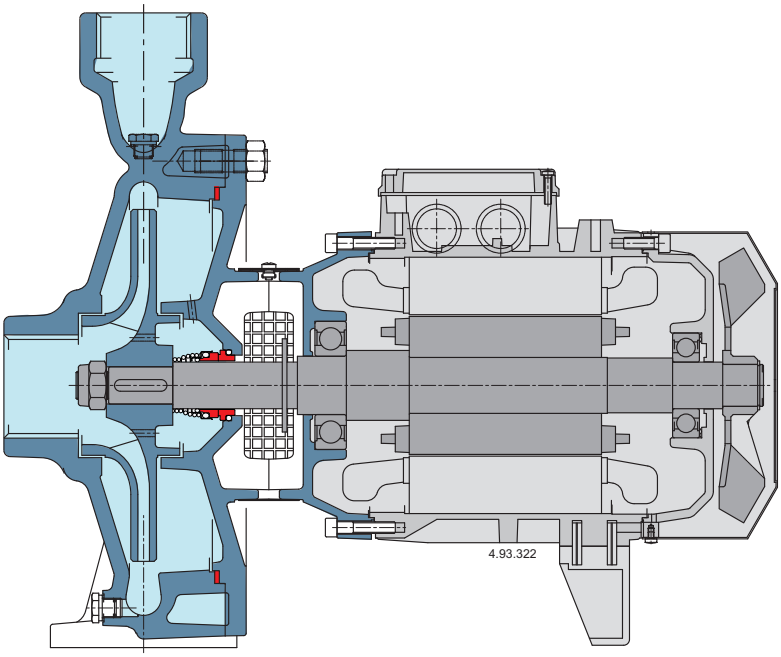

Compact Design
The compact design allows for easy installtion even in confined spaces.

Robust
The mechanical structure of the hydraulic parts in contact with the pumped liquid are dimensioned to guarantee the maximum resistence to mechanical stress.

A unique design
The lantern bracket design prevents contact with the pumps rotating parts, providing protection to the end user whilst allowing for inspection of the mechanical seal.

Reliable
The bearing and shaft are designed to ensure the reduction of the stress, providing high reliability under all operating conditions.

CALPEDA ROMANIA - INFINITY PUMPS SRL
Tel: 0268.33.47.47 / 0722.244.944
vanzari@calpeda.ro | www.calpeda.ro

Features

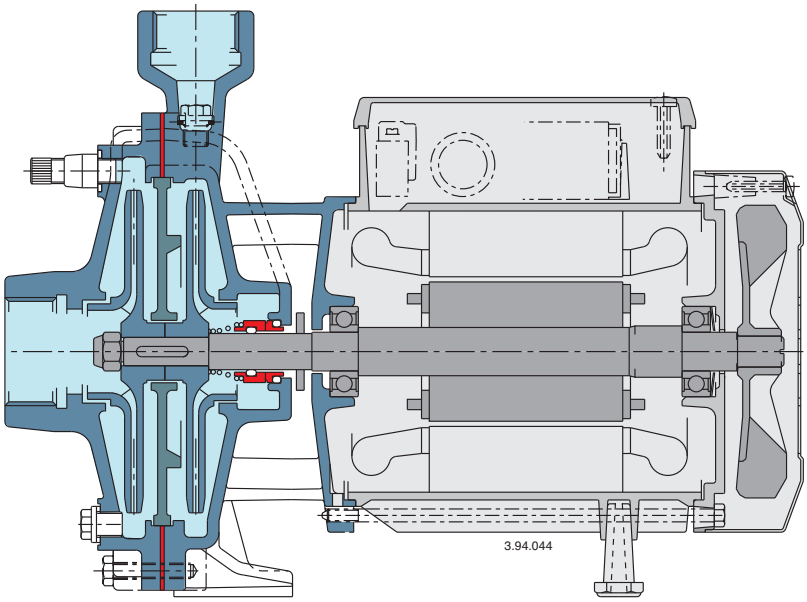

Flexible
The option to choose between cast iron and bronze materias for the hydraulic parts in contact with the pumped liquid allows NMD series pumps to be selected for use with different types of liquids.

Robust
The mechanical structure of the hydraulic parts in contact with the pumped liquid are dimensioned to guarantee the maximum resistence to mechanical stress.

Reliable
The bearing and shaft are designed to ensure the reduction of the stress, providing high reliability under all operating conditions.

CALPEDA ROMANIA - INFINITY PUMPS SRL
Tel: 0268.33.47.47 / 0722.244.944
vanzari@calpeda.ro | www.calpeda.ro

NM, NMS

Close Coupled Centrifugal Pumps
with flanged connections

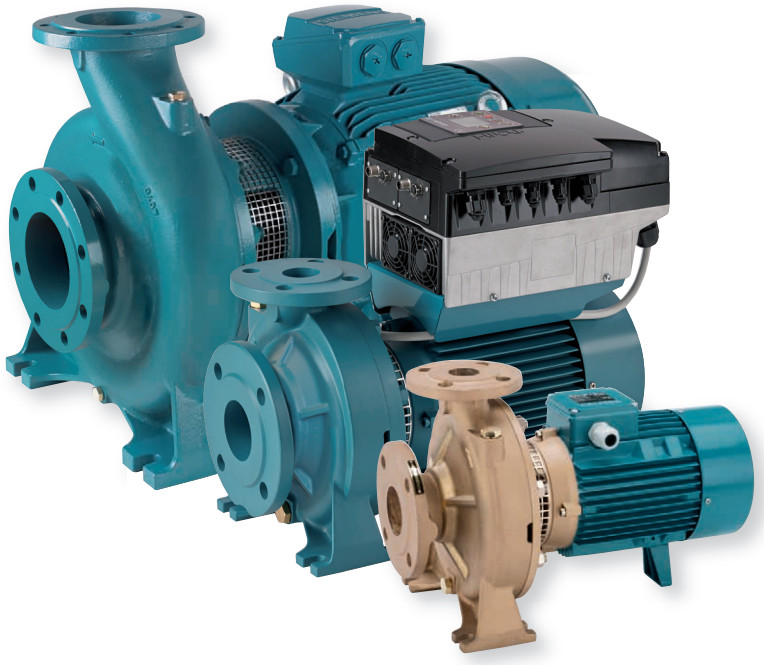

The electropumps NM, B-NM, NMS, B-NMS series comply with the European Regulation no. 547/2012.

Materials

Components	NM, NMS	B-NM, B-NMS
Pump casing Lantern bracket NM Casing cover for NMS	Cast iron GJL 200 EN 1561	Bronze G-Cu Sn 10 EN 1982
Lantern bracket NMS	Cast iron GJL 200 EN 1561	
Impeller	Cast iron GJL 200 EN 1561	Bronze G-Cu Sn 10 EN 1982
	Brass P- Cu Zn 40 Pb 2 UNI 5705 for NM 32/12-16-20, NM 40/20, B-NM 32/125-160-200, B-NM 40/200	
Shaft	Cr-Ni steel AISI 303	Cr Ni Mo steel AISI 316
	AISI 430 from 3 kW to 22 kW	
Mechanical seal	Carbon - Ceramic - NBR	
Counter-flanges	Steel Fe 430B UNI 7070	

Construction
Close-coupled centrifugal pumps; electric motor with extended shaft directly connected to the pump up to 22 kW, new bracket construction for standard motors (stub-shaft construction) from 30 to 75 kW with integrated thrust bearing.
Pump casing with axial suction and radial delivery on top, main dimensions and performance according to EN 733.
NM(S): version with pump casing and lantern bracket in cast iron.
B-NM(S): version with pump casing and lantern bracket/casing cover in bronze. (the pumps are supplied fully painted).
Connections: Flanges according to PN 10, EN 1092-2.
Counter-flanges (on request)

Sizes	Flanges
from NM 32/.. to NM 50/...	Screwed flanges EN 1092-1, PN 16
from NM 65/.. to NMS 100/...	Flanges for welding EN 1092-1, PN 10

Version with frequency converter (on request)

Applications
For clean liquids without abrasives, which are non-aggressive for the pump materials (solids content up to 0,2%). For water supply.
For heating, air conditioning, cooling and circulation plants.
For civil and industrial applications.
For fire fighting applications. For irrigation.

Operating conditions
Liquid temperature from -10 °C to +90 °C.
Ambient temperature up to 40° C.
Total suction lift up to 7 m.
Maximum permissible working pressure up to 10 bar (16 bar for NM 40/16,20; NM 50/12,16; NM 65/12,16,20,25; NM 80/16).
Continuous duty.

Motor
2-pole induction motor, 50 Hz (n ≈ 2900 rpm).
NM, NMS: three-phase 230/400 V ± 10% up to 3 kW;
400/690 V ± 10% from 4 to 75 kW.
Insulation class F. Protection IP 54 (IP 55 for NMS).
Motor suitable for operation with frequency converter from 1,1 kW.
Classification scheme IE3 for three-phase motors from 0,75 kW.
Constructed in accordance with: EN 60034-1; EN 60034-30-1.

Special features on request
- Other voltages. - Frequency 60 Hz (as per 60 Hz data sheet).
- Protection IP 55.- Special mechanical seal.
- Packed gland (only for NM standard construction).
- Single-phase motor (NMM) up to 1,5 kW.
- Higher or lower liquid or ambient temperatures.
- Motor suitable for operation with frequency converter up to 0,75 kW.

Coverage chart n ≈ 2900 rpm

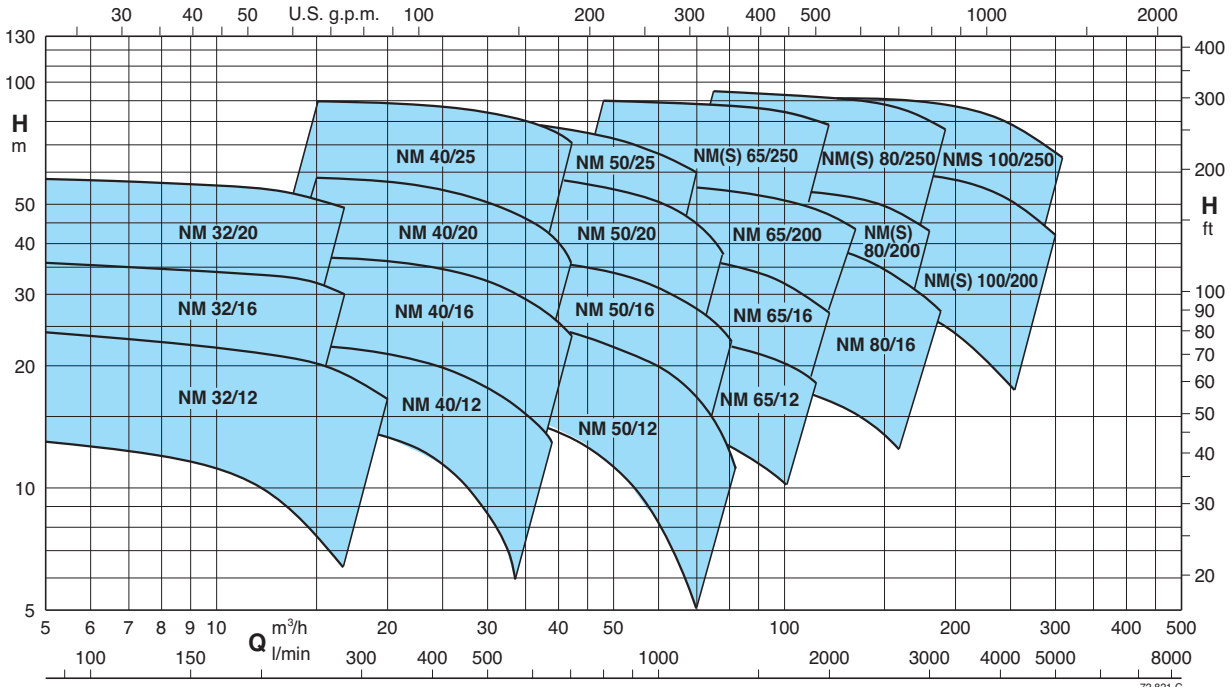

CALPEDA ROMANIA - INFINITY PUMPS SRL
Tel: 0268.33.47.47 / 0722.244.944
vanzari@calpeda.ro | www.calpeda.ro

NM EI

Close Coupled Centrifugal Pumps
with flanged connections

Pumps with frequency converter

The **NM EI** pumps are available with power from 0,55 kW up to 22 kW, the pumps are equipped with **I-MAT** installed on board which allows to realize a variable-speed system extremely compact and efficient, ideal in applications of water supply and in the distribution of hot and cold water.
The pump is equipped with transducers suitable for operation and is already programmed at the factory.

Advantages
- Energy saving
- Compact design
- Easy to use
- Programmable to suit the system requirements
- Reliability

Costruction
The system comprises of:
- Pump
- Induction motor
- I-MAT Frequency converter
- Motor adapter for the motor mounting of the frequency converter
- Connection cable between frequency converter and induction motor
- Transducers

Main features
Rated motor power output from 0,55 kW to 22 kW
Control range from 1750 to 2900 rpm (2-pole)
Protection against dry running
Protection against operations with closed valve ports
Protection against system leakages
Protection against overcurrent in the motor
Protection agains overvoltage and undervoltage of the power supply
Protection against current unbalances between phases

Operating modes

Constant pressure mode
with pressure transducer

In this mode, the system maintains the preset pressure when the flow required by the installation changes.

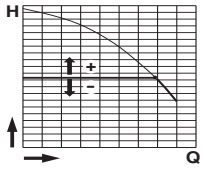

Proportional pressure mode
with pressure transducer

In this mode the system changes the working pressure according to the required flow rate.

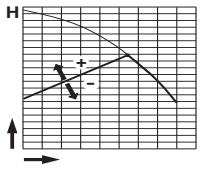

Constant flow mode
with flow meter

In this mode the system maintains a constant flow rate value in a point of the installation according to the required pressure.

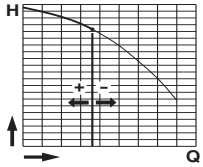

Fixed speed mode
with setting of the speed preferential rotation.

In this mode, by changing the working frequency, you may choose any operational curve included within the working range.

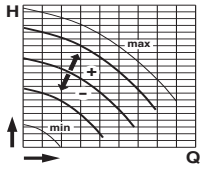

Constant temperature mode
with temperature transducer

In this mode the system keeps the temperature constant inside a system by changing the speed of the pump.

CALPEDA ROMANIA - INFINITY PUMPS SRL
Tel: 0268.33.47.47 / 0722.244.944
vanzari@calpeda.ro | www.calpeda.ro

NM, NMS

Close Coupled Centrifugal Pumps
with flanged connections

Performance n ≈ 2900 rpm

B-NM	NM	P2 kW	P2 HP	Q m³/h	6,6	7,5	8,4	9,6	10,8	12	13,2	15	16,8	18,9	21	24	27	30
				l/min	110	125	140	160	180	200	220	250	280	315	350	400	450	500
B-NM 32/12F	NM 32/12FE	0,55	0,75	H m	12,5	12,5	12	11,5	11	10	9	7,5						
B-NM 32/12D	NM 32/12DE	0,75	1		18	18	17,5	17	16,5	16	15,5	14						
B-NM 32/12A/A	NM 32/12A/A	1,1	1,5		23	23	22,5	22	21,5	21	20,5	19						
B-NM 32/12S/A	NM 32/12S/A	1,5	2		23,5	23,5	23	22,5	22	21,5	21	20,5	19	18,5	16,5	13		
B-NM 32/16B/A	NM 32/16B/A	1,5	2		29,5	29,5	29	28,5	27,5	27	26	25*	22,5*					
B-NM 32/16A/B	NM 32/16A/B	2,2	3		35,5	35,5	35	34,5	34	33,5	33	32*	30*					
B-NM 32/20D/B	NM 32/20D/B	2,2	3		38	37,5	37	36	35	33,5	32							
B-NM 32/20C/A	NM 32/20C/A	3	4		45	44,5	44	43,5	42,5	41	40	38	36					
B-NM 32/20A/B	NM 32/20A/B	4	5,5		57,5	57	56	55,5	55	54,5	53,5	51,5	49					

B-NM	NM	P2 kW	P2 HP	Q m³/h	15	16,8	18,9	21	24	27	30	33	37,8	39	42	45	48	54
				l/min	250	280	315	350	400	450	500	550	630	650	700	750	800	900
B-NM 40/12F/A	NM 40/12F/B	1,1	1,5	H m	14	13,5	13	12	11	9,5	8	6						
B-NM 40/12C/A	NM 40/12C/B	1,5	2		17,5	17	16,5	16	15	13,5	12	10,5	7,5	6,5				
B-NM 40/12A/B	NM 40/12A/C	2,2	3		22	22	21,5	21	20	19	18	16,5	14	13	11,5			
B-NM 40/16C/B	NM 40/16C/C	2,2	3		23	22,5	22	21,5	20	18,5	16,5	14,5	11	10				
B-NM 40/16B/A	NM 40/16B/B	3	4		29	28,8	28	27,5	26,5	25	23,5	21,5	18	17	14			
B-NM 40/16A/B	NM 40/16A/C	4	5,5		37	36,5	36,5	36	35	33,5	32	30,5	27	26	23,5	20	17	
B-NM 40/20D/B	NM 40/20D/B	4	5,5		39	38	37	35,5	33,5	30,5	27	22,5	14					
B-NM 40/20C/B	NM 40/20C/B	4	5,5		41,5	40,5	39,5	38	36	33,5								
B-NM 40/200B/A	NM 40/20B/A	5,5	7,5		50	49,5	48,5	47,5	45,5	43,5	41,5	37,5	30,5					
B-NM 40/200AR/A	NM 40/20AR/A	5,5	7,5		55	54,5	54	53	51	49								
B-NM 40/200A/A	NM 40/20A/A	7,5	10		57,5	57	56,5	55,5	54,5	52,5	50,5	48	42,5	40,5	35			
B-NM 4025/C/C	NM 40/25C/C	9,2	12,5		61	61	60,5	59,5	58,5	56,5	53,5	49,5	41,5	40	33,5			
B-NM 4025/B/C	NM 40/25B/C	11	15		69,5	69,5	69	68,5	67	65,5	63,5	60,5	53,5	51	45			
B-NM 4025/A/C	NM 40/25A/C	15	20		90	90	89,5	89	88,5	87	85	83	77,5	76	70,5			

B-NM	NM	P2 kW	P2 HP	Q m³/h	24	27	30	33	37,8	42	48	54	60	66	69	72	75	78	81	84
				l/min	400	450	500	550	630	700	800	900	1000	1100	1150	1200	1250	1300	1350	1400
B-NM 50/12F/B	NM 50/12F/C	2,2	3	H m			15,5	15	14	13,5	12	10	8	6						
B-NM 50/12D/A	NM 50/12D/B	3	4				20	19,5	18,5	18	16,5	14,5	13	10,5	9	8				
B-NM 50/12A/B	NM 50/12A/C	4	5,5				24	24	23	22,5	21	19,5	17,5	15	14	12,5	11,5	10		
B-NM 50/12S/B	NM 50/12S/C	4	5,5				26,5	26	25,5	24,5	23,5	22	20	18	**16,5**	15,5	14	13	11	
B-NM 50/160B/B	NM 50/16B/B	5,5	7,5				31	30,5	29,5	28	26	24	21,5	19	17,5	15,5	13,5	11,5	9,5	
B-NM 50/160A/B	NM 50/16A/B	7,5	10				38,5	38	37,5	36,5	34,5	32,5	30	27	25,5	24	22,5	20,5	19	
B-NM 50/200B/C	NM 50/20B/C	9,2	12,5		48	47,5	47,5	47	45,5	44,5	42,5	40	37	33	30,5	28	25,5	23		
B-NM 50/200A/C	NM 50/20A/C	11	15		55	55	54,5	54,5	53,5	52	50	48	45	41,5	39,5	37	35	32,5		
B-NM 50/200S/C	NM 50/20S/C	15	20		60	60	59,5	59,5	58,5	57,5	55,5	53,5	50,5	47	45	43	40,5	37		
B-NM 5025/C/C	NM 50/25C/C	11	15		55	54,5	54	53	51,5	49,5	46	41,5	35,5	28,5	24,5					
B-NM 5025/B/C	NM 50/25B/C	15	20		69	68,5	68	67,5	66	64	61	57	52,5	46,5	43					
B-NM 50/25A	NM 50/25A/D	18,5	25		80,5	80,5	80	79,5	78,5	77	74,5	71,5	67	61,5	58,5					

B-NM - B-NMS	NM - NMS	P2 kW	P2 HP	Q m³/h	37,8	42	48	54	60	66	75	84	96	108	120	132	141	150
				l/min	630	700	800	900	1000	1100	1250	1400	1600	1800	2000	2200	2350	2500
B-NM 65/12E/A	NM 65/12E/C	4	5,5	H m	16,5	16,4	16,2	15,9	15,5	15,1	14,3	13,2	11,4	9,2				
B-NM 65/125C/B	NM 65/12C/B	5,5	7,5		21,1	21	20,8	20,6	20,3	19,9	19,1	18,2	16,5	14,4	11,8			
B-NM 65/125A/B	NM 65/12A/B	7,5	10		25,9	25,8	25,6	25,4	25,1	24,8	24,1	23,3	21,9	20	17,6			
B-NM 65/160D/B	NM 65/16D/B	7,5	10				24,3	24,1	23,9	23,6	23,1	22,3	20,8	18,8	16,3			
B-NM 65/160C/C	NM 65/16C/C	9,2	12,5				28,1	28,0	27,8	27,6	27,1	26,3	24,9	23,1	20,7	17,7		
B-NM 65/160B/C	NM 65/16B/C	11	15				32,6	32,5	32,3	32	31,5	30,8	29,5	27,9	25,7	23,0		
B-NM 65/160AR	NM 65/16AR	15	20				36,4	36,3	36,2	35,9	35,5	34,8	33,7	32,1	30,0	27,5		
B-NM 65/160A/C	NM 65/16A/C	15	20				40,5	40,4	40,2	40	39,5	38,8	37,6	36,1	34,2	31,7		
B-NM 65/200C/C	NM 65/20C/C	15	20				44	43,8	43,5	43,1	42,3	41,2	39,4	37,1	34,4	31,4	28,8	
B-NMS 65/200B	NM 65/20B/D	18,5	25				50,5	50,4	50,2	49,9	49,2	48,3	46,8	44,8	42,5	39,8	37,5	
B-NMS 65/200A	NM 65/20A/A	22	30				57	57	57	56,5	56	55,5	54	52,5	50	47,5	45,5	
B-NMS 65/250C	NM 65/25C/A	22	30				61	61	60,5	60	58,5	57	54,5	51,5	47,5	43		
B-NMS 65/250B/A	NMS 65/250B/A	30	40				73,5	73,5	73,5	73,5	73	71,5	69,5	66,5	63	59		
B-NMS 65/250A/B	NMS 65/250A/B	37	50				86,5	86,5	87	86,5	86	85,5	83,5	81	78	74,5		

CALPEDA ROMANIA - INFINITY PUMPS SRL
Tel: 0268.33.47.47 / 0722.244.944
vanzari@calpeda.ro | www.calpeda.ro

NM, NMS

Close Coupled Centrifugal Pumps
with flanged connections

Performance n ≈ 2900 rpm

B-NM - B-NMS	NM - NMS	P2		Q m³/h	75	84	96	108	120	132	150	168	180	192	210	240	270	300
		kW	HP	l/min	1250	1400	1600	1800	2000	2200	2500	2800	3000	3200	3500	4000	4500	5000
B-NM 80/160E/B	NM 80/16E/B	7,5	10	H m	21,5	20,9	19,9	18,7	17,4	15,9	13,4	10,6						
B-NM 80/160D/C	NM 80/16D/C	9,2	12,5		25,2	24,5	23,5	22,4	21,1	19,6	17,2	14,4						
B-NM 80/160C/C	NM 80/16C/C	11	15		28,7	28,2	27,4	26,4	25,1	23,8	21,3	18,5	16,4					
B-NM 80/160B/C	NM 80/16B/C	15	20		34,8	34,5	33,8	33	32,1	30,9	28,9	26,4	24,5	22,4				
B-NM 80/16A	NM 80/16A/D	18,5	25		39,9	39,6	39	38,2	37,4	36,4	34,5	32,2	30,3	28,1				
B-NMS 80/200B/A	NM 80/20B	22	30		46,5	46	45,5	44,5	43,5	42	39*	35,5*	32*					
B-NMS 80/200A/A	NMS 80/200A	30	40		56	55,5	55	54	53	52	49,5*	46*	43*					
B-NMS 80/250E/A	NM 80/25E	22	30		51	50	48,5	46,5	44,5	42	38*	33*	29*					
B-NMS 80/250D/A	NMS 80/250D	30	40		65	64	62,5	61	59	56,5	53*	49*	45,5*	41*				
B-NMS 80/250C/A	NMS 80/250C/A	37	50		73,5	73	72	70,5	69	67	63*	59*	55,5*	51,5*				
B-NMS 80/250B/A	NMS 80/250B/A	45	60		84	83,5	82,5	81,5	80	78	74,5*	70,5*	67*	63*				
B-NMS 80/250A/A	NMS 80/250A/A	55	75		95	94,5	93,5	92,5	91,5	90	87,5*	84*	80,5*	76,5*				
B-NMS 100/200E/B	NM 100/20E/A	18,5	25					30	29,5	29	28	27	26	25	23	19*		
B-NMS 100/200D/A	NM 100/20D	22	30					36	35,5	35	34	33	32	31	29	24,5*	19*	
B-NMS 100/200C/A	NMS 100/200C	30	40					45	44,5	44	43,5	42,5	41,5	40,5	39	34,5*	29*	22°
B-NMS 100/200B/A	NMS 100/200B/A	37	50					54	53,5	53	52,5	51,5	50,5	49,5	48	44*	38,5*	32°
B-NMS 100/200A/A	NMS 100/200A/A	45	60					61,5	61	60,5	60	59,5	58,5	58	56,5	53*	48*	42°
B-NMS 100/250B/A	NMS 100/250B/A	55	75					73,5	73	72,5	71,5	70	68,5	67	65	61*	55,5*	48,5°
B-NMS 100/250A/A	NMS 100/250A/A	75	100					91	90,5	90	89,5	88,5	88	87	85	81*	75*	67°

NM(S) Standard construction.
B-NM(S) Bronze construction.

P2 Rated motor power output.
H Total head in m.

* Maximum suction lift 1-2 m.
° With 1 m suction head.
Tolerances according to UNI EN ISO 9906:2012

Rated currents

P2		230V Δ / 400V Y	400V Δ / 690V Y		
kW	HP	IN A	IN A	IN A	IA/IN
0,55	0,75	4	2,3		4,8
0,75	1	4	2,3		6,1
1,1	1,5	4,6	2,7		5,5
1,5	2	7,5	4,3		6,1
2,2	3	9,2	5,3		8,4
3	4	11,5	6,6		8,2
4	5,5		9,6	5,5	8,9
5,5	7,5		10,8	6,2	9,1
7,5	10		14,3	8,3	9,1
9,2	12,5		18,5	10,7	8,2
11	15		21,5	12,4	8,5
15	20		27,3	15,8	9,5
18,5	25		34	19,6	9,5
22	30		41	23,7	9,5
30	40		54	31,2	8,8
37	50		64	36,9	7,2
45	60		77	44,5	7,3
55	75		93	53,7	6,8
75	100		128	73,9	7

P2 Rated motor power output.
IA/IN D.O.L. starting current / Nominal current

CALPEDA ROMANIA - INFINITY PUMPS SRL
Tel: 0268.33.47.47 / 0722.244.944
vanzari@calpeda.ro | www.calpeda.ro

NM, NMS

Close Coupled Centrifugal Pumps
with flanged connections

Characteristic curves n ≈ 2900 rpm

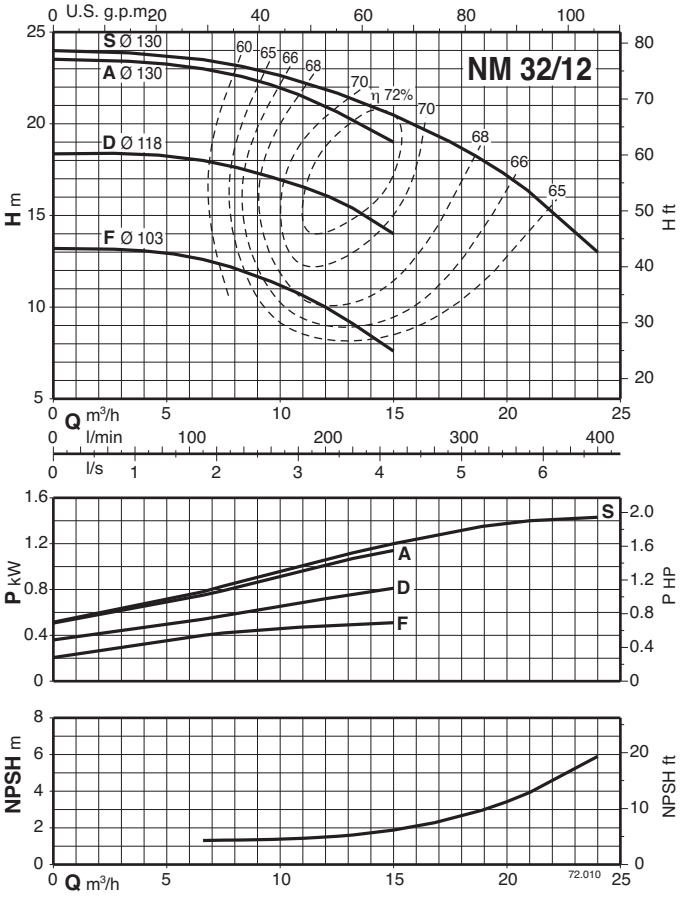

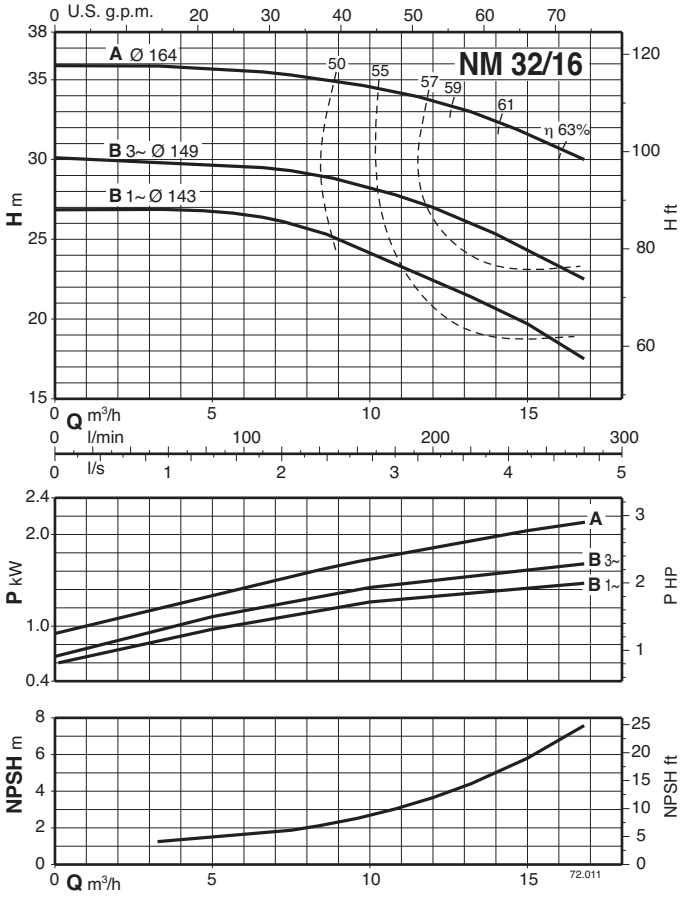

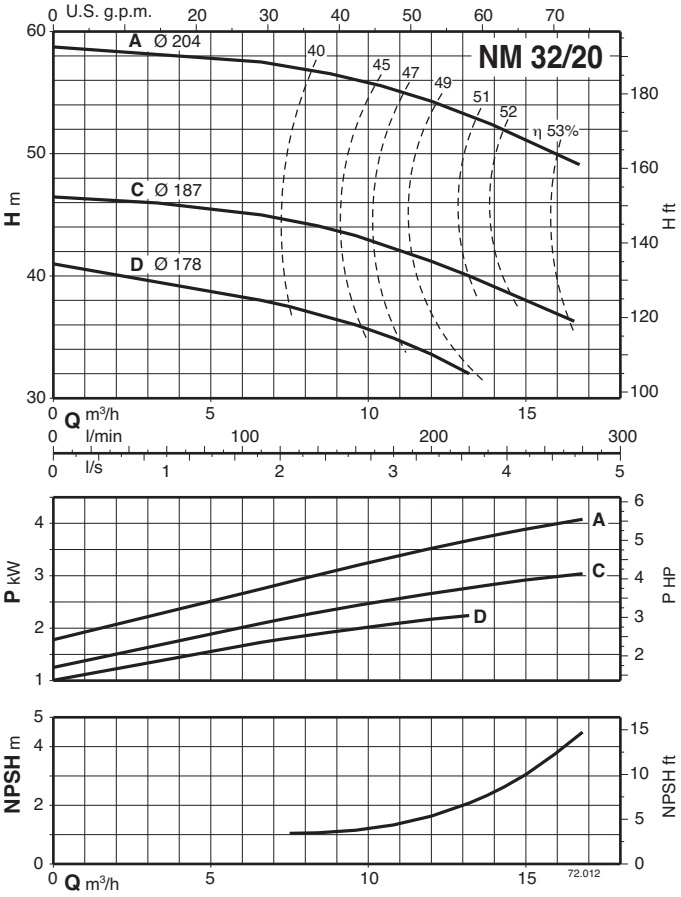

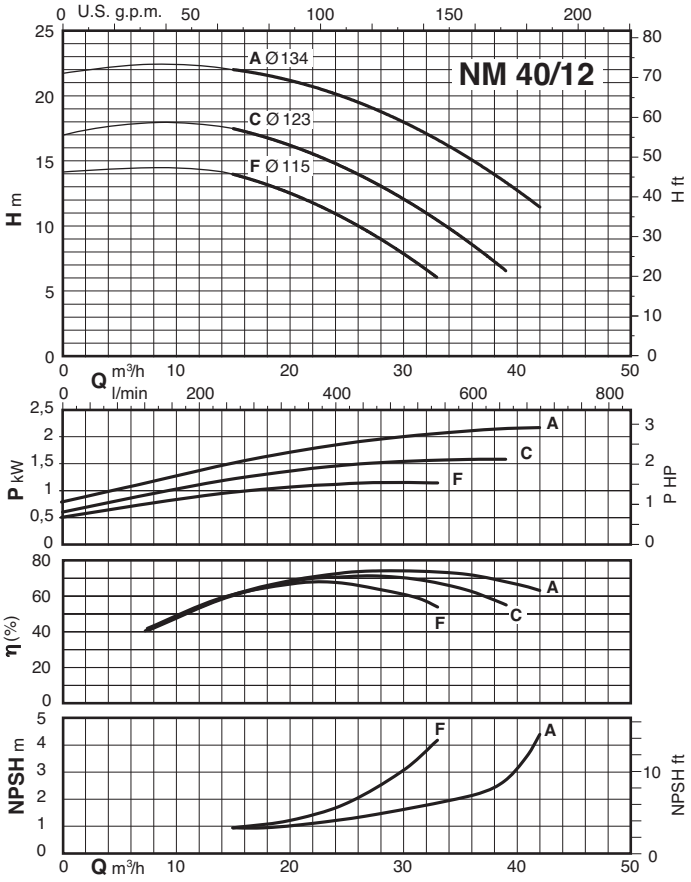

CALPEDA ROMANIA - INFINITY PUMPS SRL
Tel: 0268.33.47.47 / 0722.244.944
vanzari@calpeda.ro | www.calpeda.ro

NM, NMS

Close Coupled Centrifugal Pumps
with flanged connections

Characteristic curves n ≈ 2900 rpm

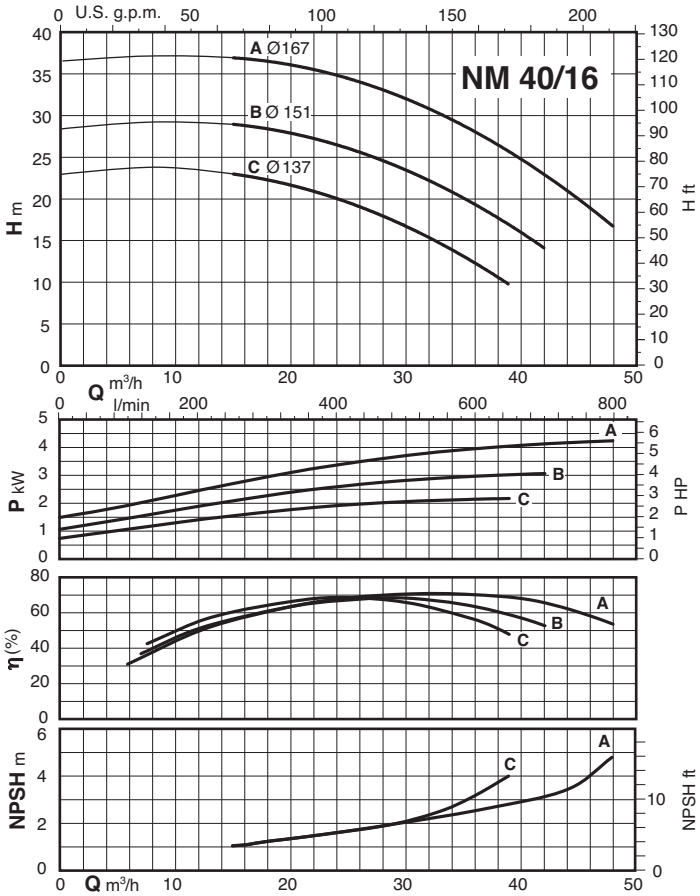

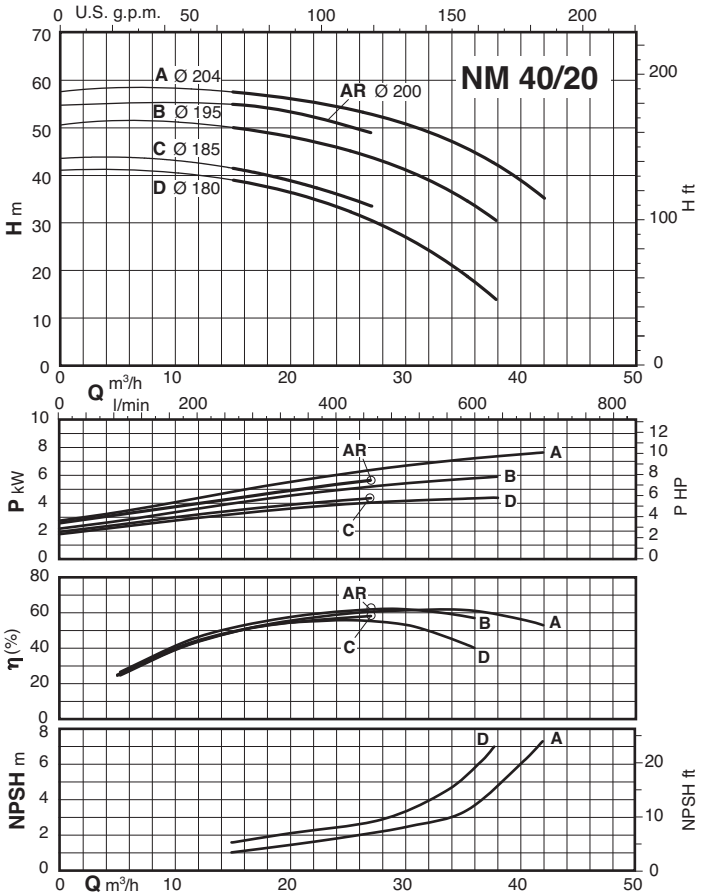

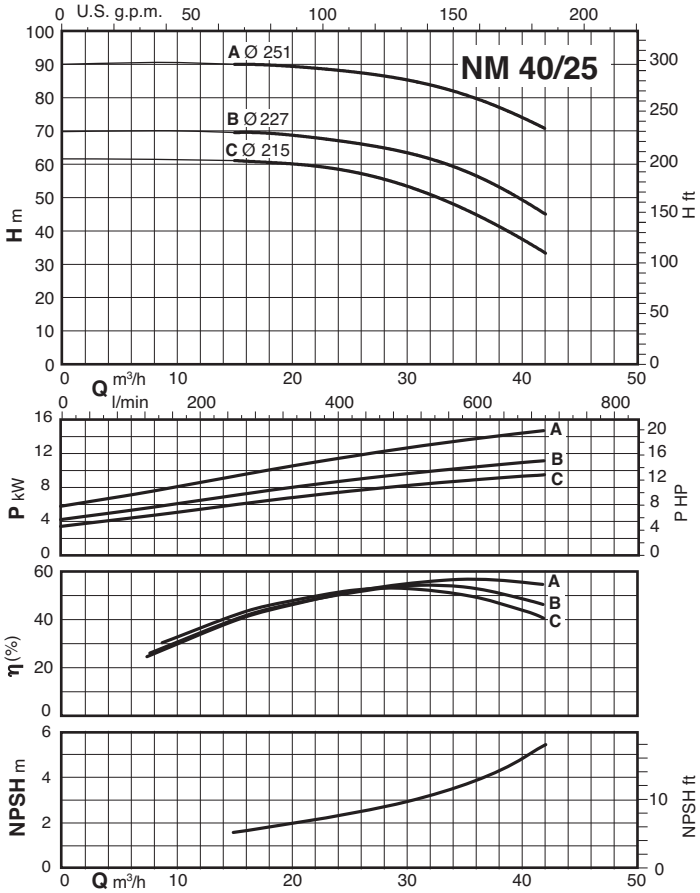

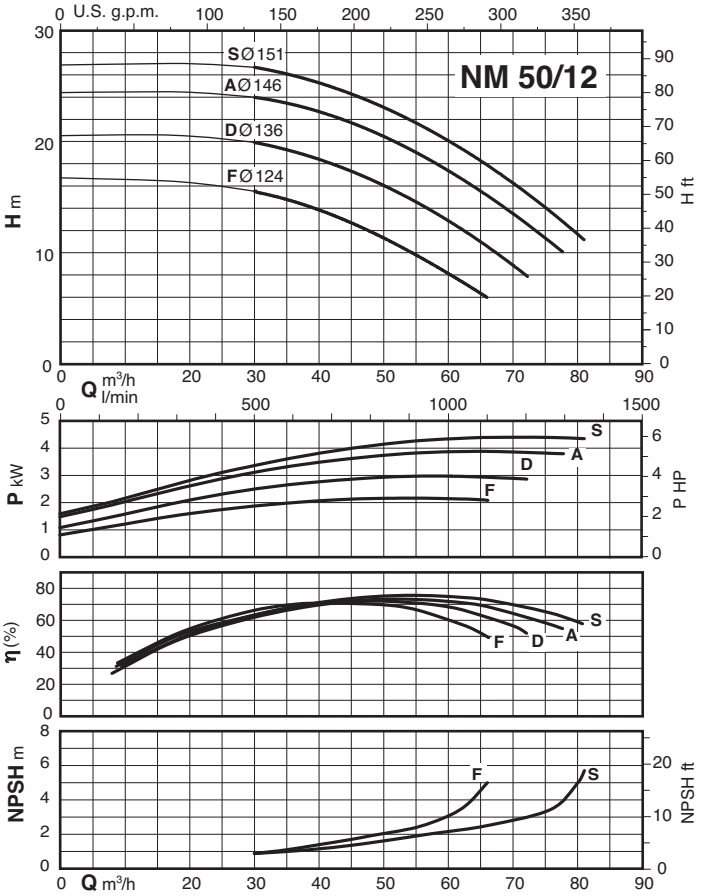

CALPEDA ROMANIA - INFINITY PUMPS SRL
Tel: 0268.33.47.47 / 0722.244.944
vanzari@calpeda.ro | www.calpeda.ro

NM, NMS

Close Coupled Centrifugal Pumps
with flanged connections

Characteristic curves n ≈ 2900 rpm

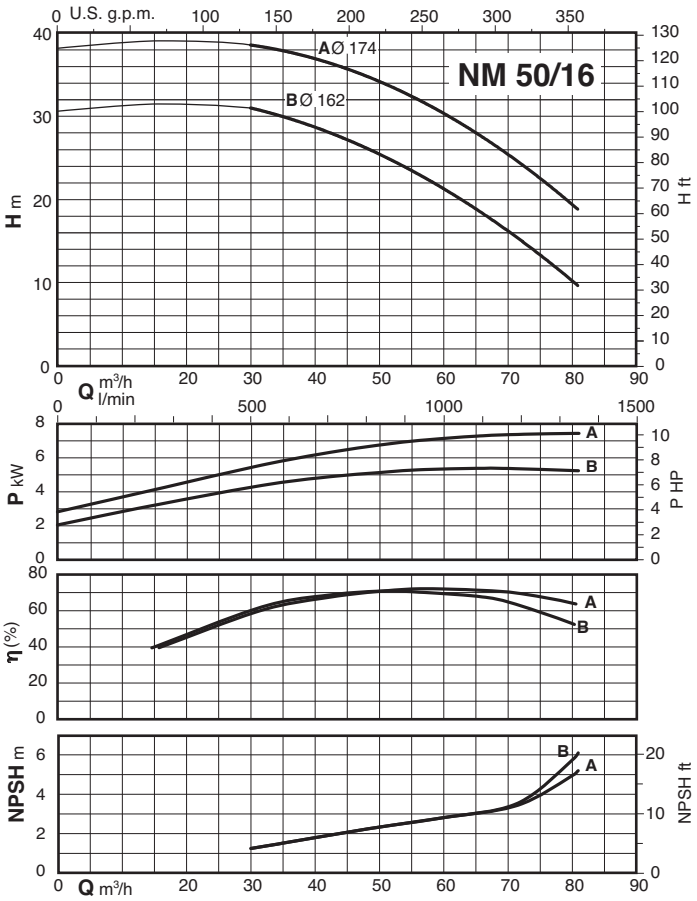

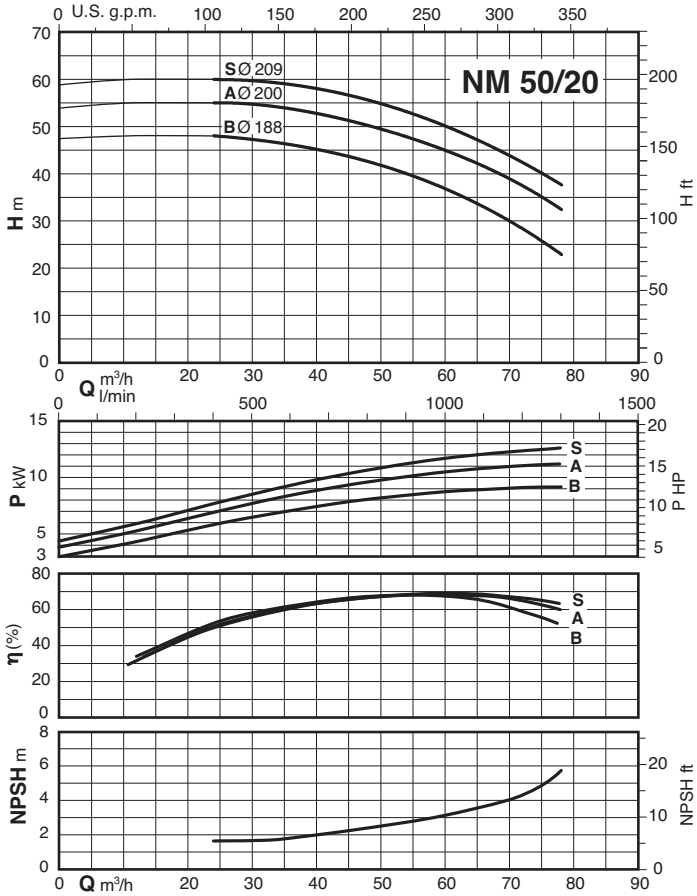

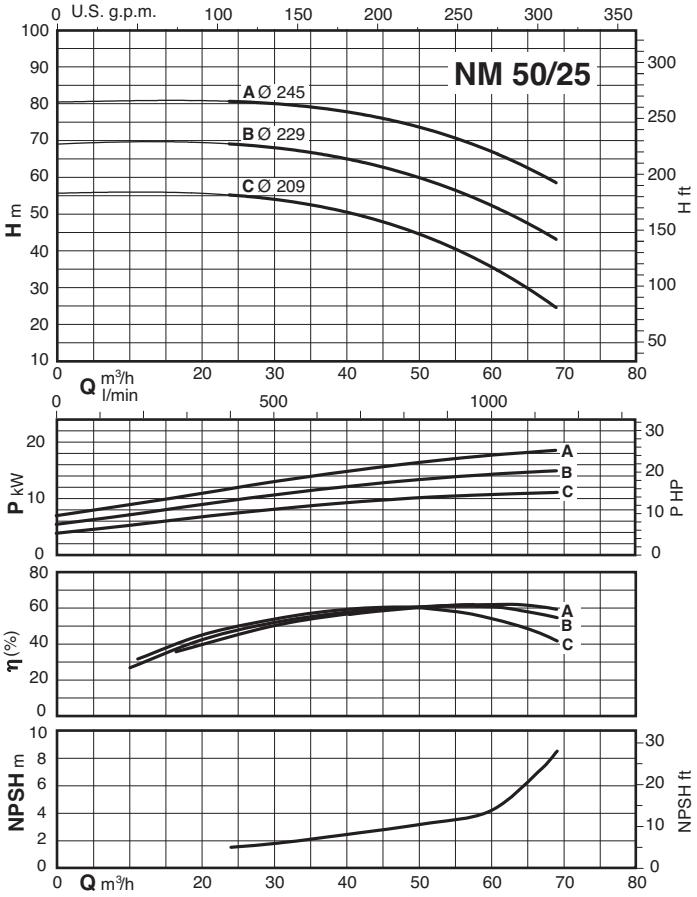

CALPEDA ROMANIA - INFINITY PUMPS SRL
Tel: 0268.33.47.47 / 0722.244.944
vanzari@calpeda.ro | www.calpeda.ro

NM, NMS

Close Coupled Centrifugal Pumps
with flanged connections

Characteristic curves n ≈ 2900 rpm

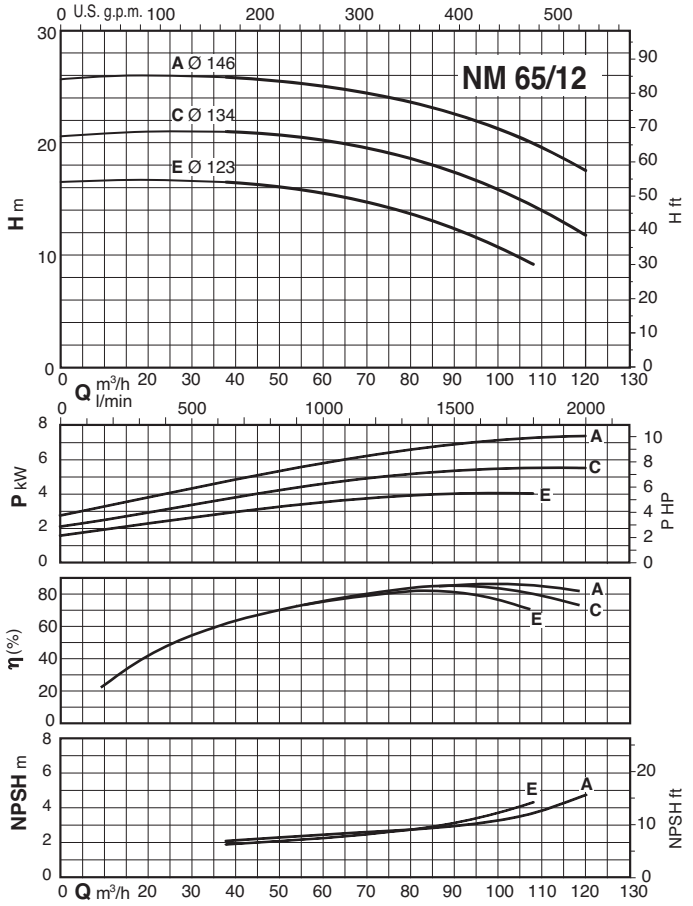

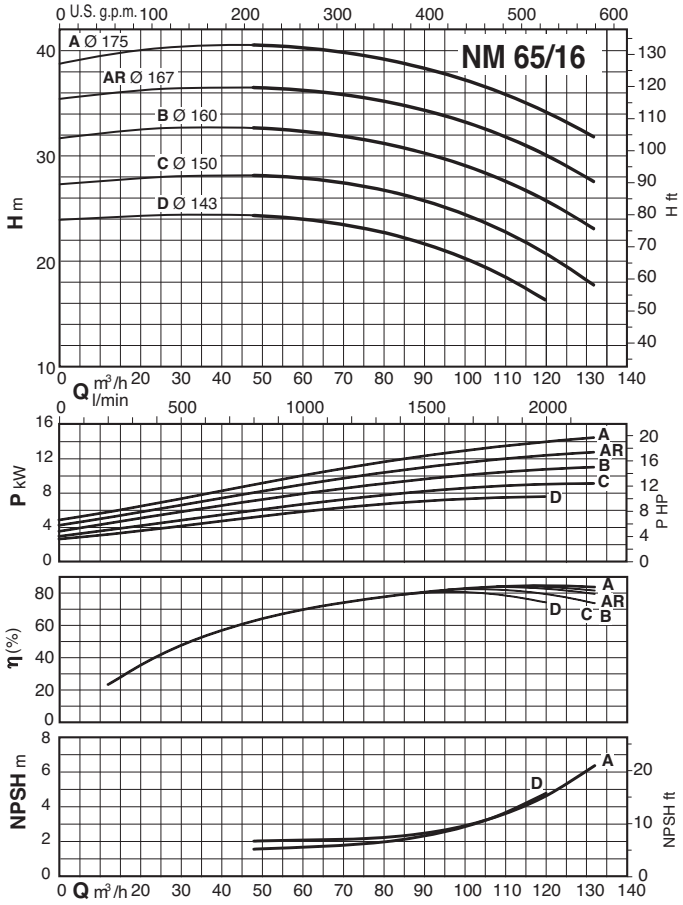

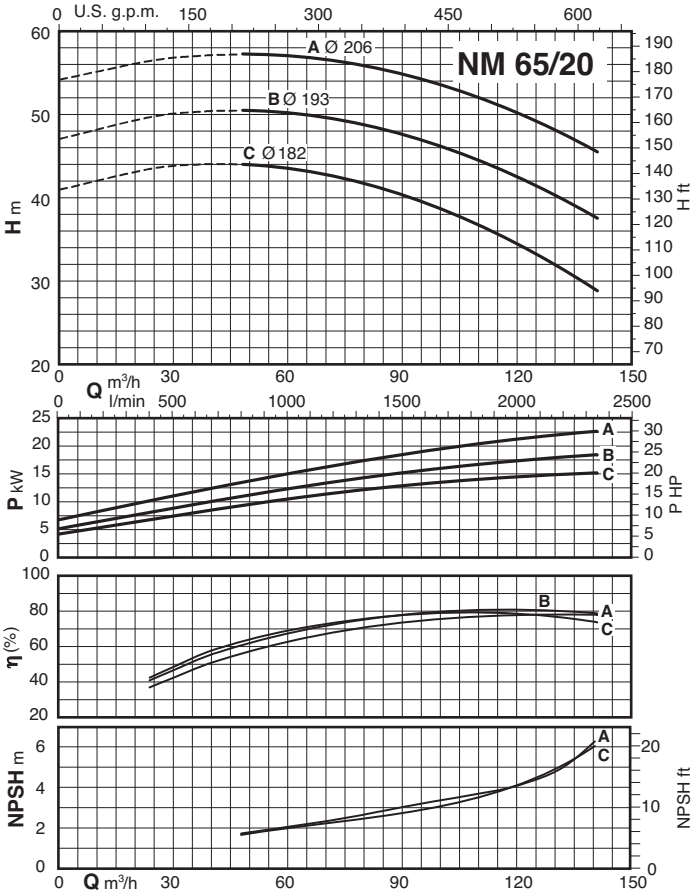

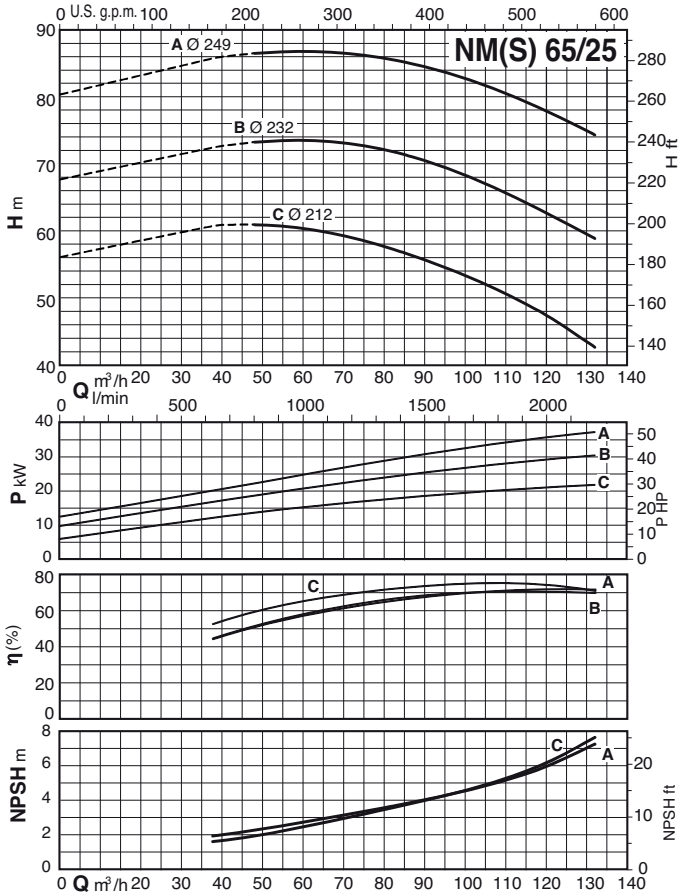

CALPEDA ROMANIA - INFINITY PUMPS SRL
Tel: 0268.33.47.47 / 0722.244.944
vanzari@calpeda.ro | www.calpeda.ro

NM, NMS

Close Coupled Centrifugal Pumps
with flanged connections

Characteristic curves n ≈ 2900 rpm

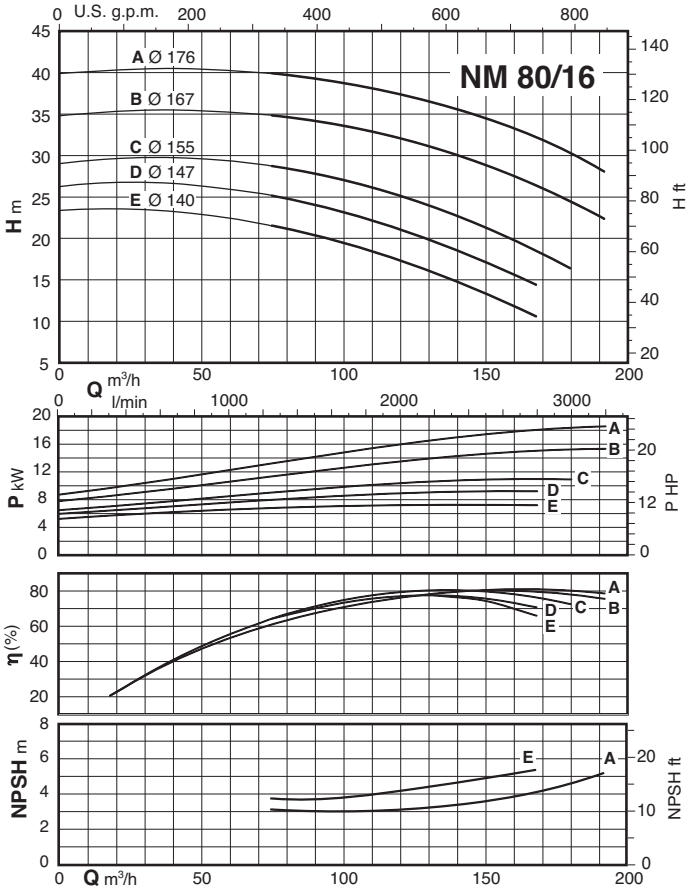

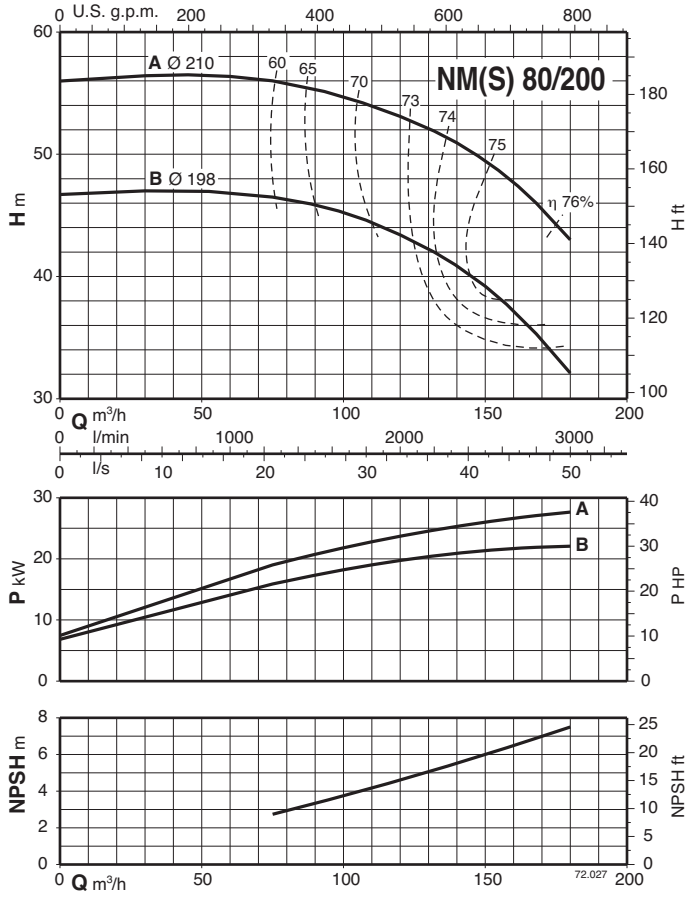

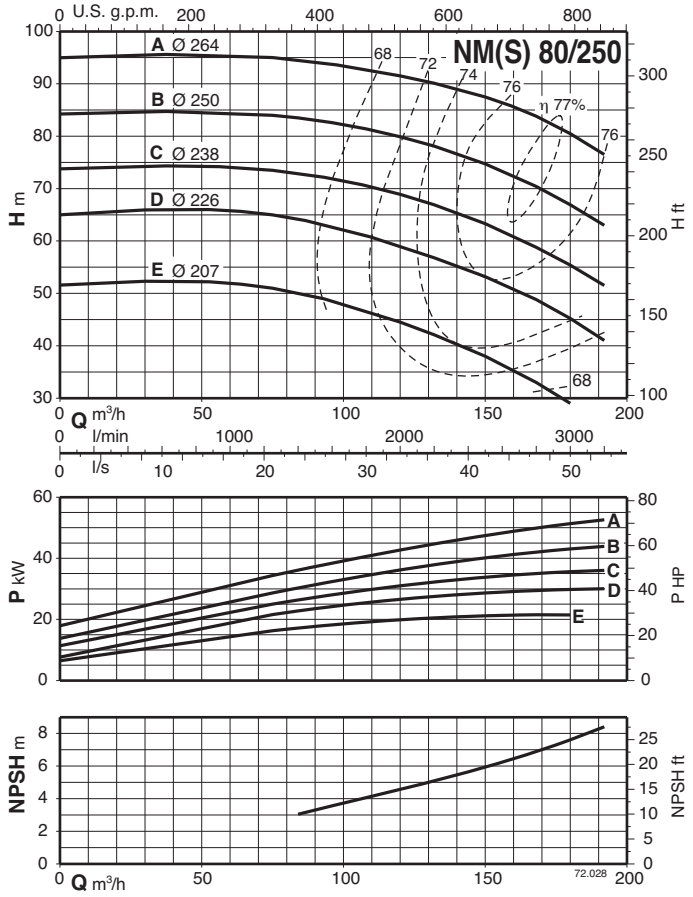

CALPEDA ROMANIA - INFINITY PUMPS SRL
Tel: 0268.33.47.47 / 0722.244.944
vanzari@calpeda.ro | www.calpeda.ro

NM, NMS

Close Coupled Centrifugal Pumps
with flanged connections

Characteristic curves n ≈ 2900 rpm

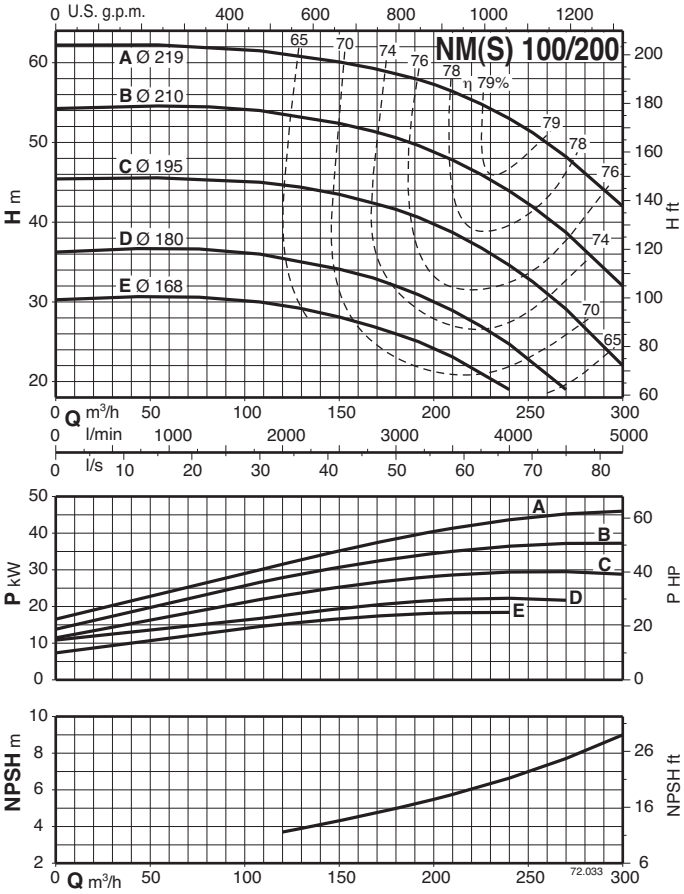

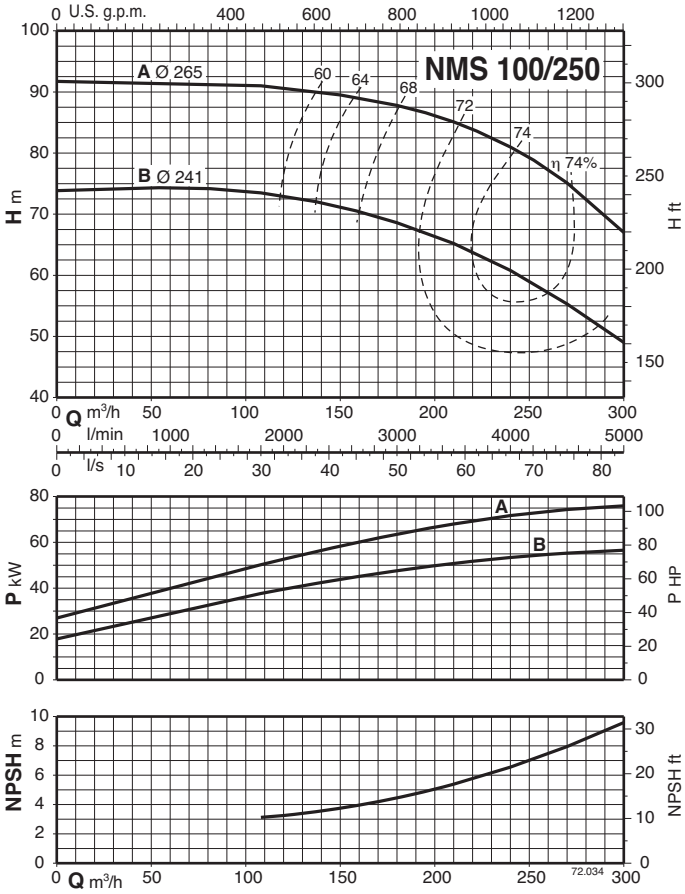

CALPEDA ROMANIA - INFINITY PUMPS SRL
Tel: 0268.33.47.47 / 0722.244.944
vanzari@calpeda.ro | www.calpeda.ro

NM, NMS

Close Coupled Centrifugal Pumps
with flanged connections

Dimensions and weights

1

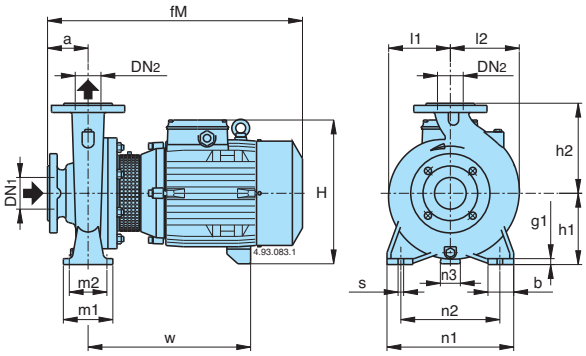

2

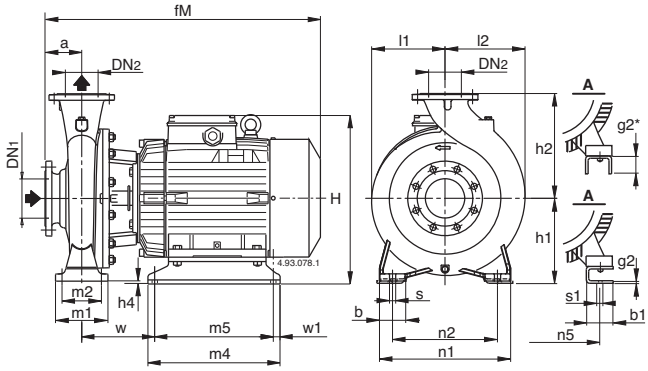

Picture	NM	mm																									kg
		DN1	DN2	a	fM	h1	h2	H	h4	m1	m2	n1	n2	n3	n5	w1	b	b1	s	s1	l1	l2	w	m4	m5	g1	g2	
1	NM 32/12DE-FE NM 32/12S/A-A/A	50	32	80	405	112	140	240	-	100	70	190	140	37	-	-	50	-	14	-	93	97	245	-	-	12	-	24-24 27-26
1	NM 32/16B/A NM 32/16A/B	50	32	80	410 450	132	160	260	-	100	70	240	190	47	-	-	50	-	14	-	120	120	250 290	-	-	12	-	34 39
1	NM 32/20D/B NM 32/20C/A NM 32/20A/B	50	32	80	450 475 475	160	180	288 298 298	-	100	70	240	190	62 60 60	-	-	50	-	14	-	140	140	290 295 295	-	-	12	-	42 47 51
1	NM 40/12C/B-F/B NM 40/12A/C	65	40	80	410 450	112	140	240	-	100	70	210	160	37	-	-	50	-	14	-	100	113	250 290	-	-	12	-	29-27 32
1	NM 40/16C/C NM 40/16B/B NM 40/16A/C	65	40	80	450 475 475	132	160	260 270 270	-	100	70	240	190	47 45 45	-	-	50	-	14	-	121	122	290 295 295	-	-	10	-	39 46 48
1	NM 40/20C/B-D/B NM 40/20A/A-AR/A-B/A	65	40	100	495 528	160	180	298 320	-	100	70	265	212	60 49	-	-	50	-	14	-	142	142	295 279	-	-	12	-	54-53 73-67-67
1	NM 40/25C/C NM 40/25B/C NM 40/25A/C	65	40	100	640 690 715	180	225	365	-	125	95	320	250	50	-	-	65	-	14	-	175	175	400 460 460	-	-	15	-	108 117 139
1	NM 50/12F/C NM 50/12D/B NM 50/12A/C-S/C	65	50	100	470 495 495	132	160	260 270 270	-	100	70	240	190	47 45 45	-	-	50	-	14	-	122	137	290 295 295	-	-	10	-	40 47 50,5-50,6
1	NM 50/16A/B-B/B	65	50	100	528	160	180	320	-	100	70	265	212	49	-	-	50	-	14	-	126	140	279	-	-	12	-	70,5-64
1	NM 50/20B/C NM 50/20A/C NM 50/20S/C	65	50	100	640 690 720	160	200	345	-	100	70	265	212	40	-	-	50	-	14	-	140	153	400 460 460	-	-	15	-	100 109 131
1	NM 50/25C/C NM 50/25B/C	65	50	100	695 720	180	225	365	-	125	95	320	250	50	-	-	65	-	14	-	175	175	465 465	-	-	15	-	122 145
2	NM 50/25A/D	65	50	100	766	180	225	386	-	125	95	320	250	-	254	20	65	60	14	15	175	175	166	394	354	-	20*	-
1	NM 65/12E/C NM 65/12A/B-C/B	80	65	100	500 533	160	180	298 320	-	125	95	280	212	60 49	-	-	65	-	14	-	130	154	300 284	-	-	12	-	51,9 70,7-64,7
1	NM 65/16D/B NM 65/16C/C NM 65/16B/C NM 65/16A/C-AR	80	65	100	528 640 690 715	160	200	320 345 345 345	-	125	95	280	212	49 40 40 40	-	-	65	-	14	-	140	161	279 410 410 460	-	-	12	-	70,5 93 112 127
1	NM 65/20C/C	80	65	100	715	180	225	365	-	125	95	320	250	50	-	-	65	-	14	-	159	179	460	-	-	12	-	134
2	NM 65/20A/A-B/D	80	65	100	762	180	225	386	-	125	95	320	250	-	254	20	65	60	14	15	159	179	175	394	354	-	20*	--
2	NM 65/25C/A	80	65	100	762	202	250	408	2	160	120	360	280	-	254	20	80	90	18	14	179	185	182	400	360	-	42*	187
1	NM 80/16E/B NM 80/16D/C NM 80/16C/C NM 80/16B/C	100	80	125	553 670 720 745	180	225	340 365 365 365	-	125	95	320	250	60 50 50 50	-	-	65	-	14	-	153	181	279 415 465 465	-	-	12	-	77,5 101 120 132
2	NM 80/16A/D	100	80	125	789	180	225	386	-	125	95	320	250	-	254	20	65	60	14	15	153	181	164	394	354	-	20*	-
2	NM 80/20B	100	80	125	787	202	250	408	22	125	95	345	280	-	254	20	65	90	18	14	170	194	182	400	360	-	42*	180
2	NM 80/25E	100	80	125	787	202	280	408	2	160	120	400	315	-	254	20	80	90	18	14	191	210	182	400	360	-	42*	193
2	NM 100/20D-E/A	125	100	125	787	200	280	406	-	160	120	360	280	-	254	20	80	90	18	15	180	212	162	394	354	-	40*	--

Pumps with packed gland, dimensions available on request (excluded NMS).

CALPEDA ROMANIA - INFINITY PUMPS SRL
Tel: 0268.33.47.47 / 0722.244.944
vanzari@calpeda.ro | www.calpeda.ro

NM EI

Close Coupled Centrifugal Pumps
with flanged connections

Dimensions and weights

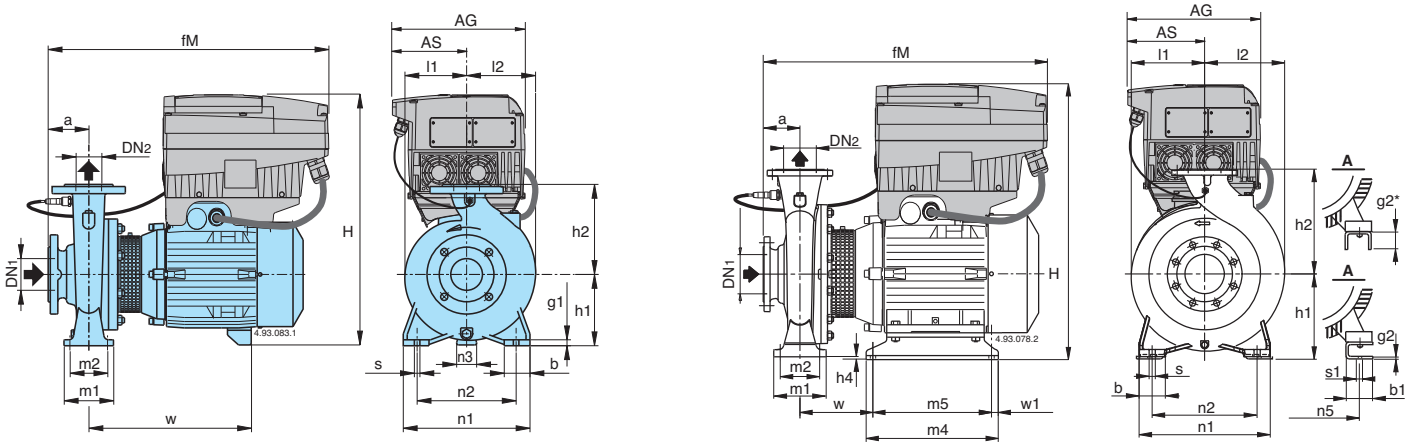

Picture	NM EI	mm																												kg
		DN1	DN2	a	fM	AG	AS	h1	h2	H	h4	m1	m2	n1	n2	n3	n5	w1	b	b1	s	s1	l1	l2	w	m4	m5	g1	g2	
1	NM EI 32/12DE-FE NM EI 32/12S/A-A/A	50	32	80	435	190	105	112	140	398	-	100	70	190	140	37	-	-	50	-	14	-	93	97	245	-	-	12	-	30,4-30,4 32,4-33,4
1	NM EI 32/16B/A NM EI 32/16A/B	50	32	80	440 470	190 210	105 118	132	160	418	-	100	70	240	190	47	-	-	50	-	14	-	120	120	250 290	-	-	12	-	40,4 46,5
1	NM EI 32/20D/B NM EI 32/20C/A NM EI 32/20A/B	50	32	80	470 485 485	210	118	160	180	446 454 454	-	100	70	240	190	62 60 60	-	-	50	-	14	-	140	140	290 295 295	-	-	12	-	49,5 54,5 59
1	NM EI 40/12C/B-F/B NM EI 40/12A/C	65	40	80	440 470	190 210	105 118	112	140	398	-	100	70	210	160	37	-	-	50	-	14	-	100	113	250 290	-	-	12	-	33,4-35,4 39,5
1	NM EI 40/16C/C NM EI 40/16B/B NM EI 40/16A/C	65	40	80	470 485 485	210	118	132	160	418 426 426	-	100	70	240	190	47 45 45	-	-	50	-	14	-	121	122	290 295 295	-	-	10	-	46,5 53,5 56
1	NM EI 40/20C/B-D/B NM EI 40/20AR/A-B/A NM EI 40/20A/A	65	40	100	505 528 535	210 281 281	118 153 153	160	180	454 482 528	-	100	70	265	212	60 49 49	-	-	50	-	14	-	142	142	295 279 279	-	-	12	-	61-62 75-75 87,8
1	NM EI 40/25C/C NM EI 40/25B/C NM EI 40/25A/C	65	40	100	640 690 738	281 281 350	153 153 190	180	225	573 573 651	-	125	95	320	250	50	-	-	65	-	14	-	175	175	400 460 460	-	-	15	-	122,8 131,8 166,8
1	NM EI 50/12F/C NM EI 50/12D/B NM EI 50/12A/C-S/C	65	50	100	490 505 505	210	118	132	160	418 426 426	-	100	70	240	190	47 45 45	-	-	50	-	14	-	122	137	290 295 295	-	-	10	-	47,5 54,5 57-57
1	NM EI 50/16B/B NM EI 50/16A/B	65	50	100	528 535	281	153	160	180	482 528	-	100	70	265	212	49	-	-	50	-	14	-	126	140	279	-	-	12	-	72 85,3
1	NM EI 50/20B/C NM EI 50/20A/C NM EI 50/20S/C	65	50	100	640 690 738	281 281 350	153 153 190	160	200	553 553 631	-	100	70	265	212	40	-	-	50	-	14	-	140	153	400 460 460	-	-	15	-	114,8 123,8 166
1	NM EI 50/25C/C NM EI 50/25B/C	65	50	100	695 743	281 350	153 190	180	225	533 651	-	125	95	320	250	50	-	-	65	-	14	-	175	175	465 465	-	-	15	-	136,8 180
2	NM EI 50/25A/D	65	50	100	769	350	190	180	225	671	-	125	95	320	250	-	254	20	65	60	14	15	175	175	166	394	354	15	20*	-
	NM EI 65/12E/C NM EI 65/12C/B NM EI 65/12A/B	80	65	100	510 533 540	210 281 281	118 153 153	160	180	482 528 528	-	125	95	280	212	60 49 49	-	-	65	-	14	-	130	154	300 284 284	-	-	12	-	59,9 72,7 85,5
	NM EI 65/16D/B NM EI 65/16C/C NM EI 65/16B/C NM EI 65/16A/C-AR	80	65	100	528 640 690 738	281 281 281 350	153 153 153 190	160	200	582 553 553 631	-	125	95	280	212	49 40 40 40	-	-	65	-	14	-	140	161	279 410 410 460	-	-	12	-	85,3 107,8 126,8 162
	NM EI 65/20C/C	80	65	100	738	350	190	180	225	651	-	125	95	320	250	50	-	-	65	-	14	-	159	179	460	-	-	12	-	171
2	NM EI 65/20A/A-B/D	80	65	100	765	350	190	180	225	671	-	125	95	320	250	-	254	20	80	60	14	15	155	175	175	394	354	-	20*	- -
2	NM EI 65/25C/A	80	65	100	765	350	190	202	250	693	2	160	120	360	280	-	254	20	80	90	18	14	179	185	182	400	360	-	42*	222
1	NM EI 80/16E/B NM EI 80/16D/C NM EI 80/16C/C NM EI 80/16B/C	100	80	125	555 670 720 768	281 281 350 350	153 153 190 190	180	225	548 573 573 651	-	125	95	320	250	60 50 50 50	-	-	65	-	14	-	165	193	279 415 465 465	-	-	15	-	92,3 115,8 134,8 167
2	NM EI 80/16A/D	100	80	125	792	350	190	180	225	671	-	125	95	345	280	-	254	20	80	60	18	15	170	194	164	394	354	-	20*	-
2	NM EI 80/20B	100	80	125	790	350	190	202	250	693	22	125	95	345	280	-	254	20	80	90	18	14	170	194	182	400	360	-	42*	215
2	NM EI 80/25E	100	80	125	790	350	190	202	280	693	2	160	120	400	315	-	254	20	80	90	18	14	191	210	182	400	360	-	42*	228
2	NM EI 100/20D-E/A	125	100	125	790	350	190	200	280	691	-	160	120	360	280	-	254	20	80	60	18	15	180	212	162	394	354	-	40*	- -

CALPEDA ROMANIA - INFINITY PUMPS SRL
Tel: 0268.33.47.47 / 0722.244.944
vanzari@calpeda.ro | www.calpeda.ro

NM, NMS

Close Coupled Centrifugal Pumps
with flanged connections

Dimensions and weights

1

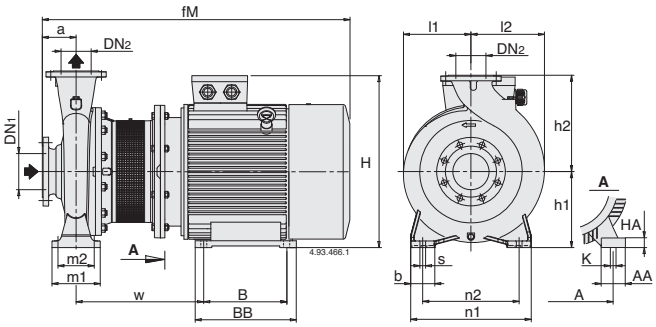

1°

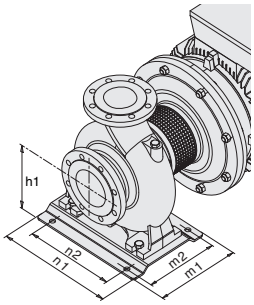

2

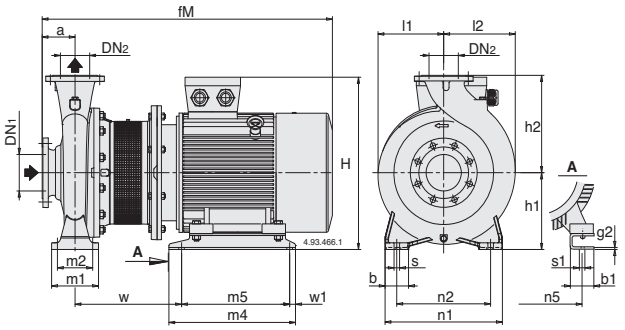

2°

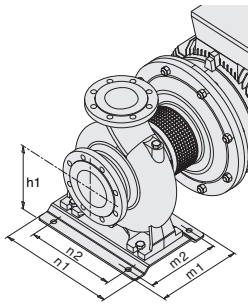

Picture	NMS	mm																													kg
		DN1	DN2	a	fM	h1	h2	H	m1	m2	n1	n2	A	n5	w1	b	AA	b1	s	K	s1	l1	l2	w	BB	m4	B	m5	HA	g2	
2	NMS 65/250B/A	80	65	100	961	200	250	486	160	120	360	280	-	279	20	80	-	70	18	-	15	179	195	333	-	440	-	400	-	20	236
1	NMS 65/250A/B	80	65	100	1009	200	250	515	160	120	360	280	318	-	-	80	70	-	18	19	-	200	200	406	355	-	305	-	25	-	321
1	NMS 80/200A	100	80	125	986	180	250	466	125	95	345	280	279	-	-	65	65	-	14	19	-	170	194	394	328	-	279	-	20	-	222
2	NMS 80/250D	100	80	125	986	200	280	486	160	120	400	315	-	279	20	80	-	70	18	-	15	191	211	333	-	440	-	400	-	20	242
1	NMS 80/250C/A	100	80	125	1034	200	280	515	160	120	400	315	318	-	-	80	70	-	18	19	-	200	210	406	355	-	305	-	25	-	345
1°	NMS 80/250B/A	100	80	125	1129	225	280	563	298	258	410	315	356	-	-	-	80	-	18	19	-	225	225	445	361	-	311	-	34	-	437
2°	NMS 80/250A/A	100	80	125	1198	280	280	690	260	220	410	315	-	406	25	-	-	100	18	-	24	275	275	443	-	500	-	450	-	8	534
2	NMS 100/200C	125	100	125	986	200	280	486	160	120	360	280	-	279	20	80	-	70	18	-	15	180	212	333	-	440	-	400	-	20	236
1	NMS 100/200B/A	125	100	125	1034	200	280	515	160	120	360	280	318	-	-	80	70	-	18	19	-	200	212	406	355	-	305	-	25	-	338
1°	NMS 100/200A/A	125	100	125	1129	225	280	563	298	258	410	315	356	-	-	-	80	-	18	19	-	225	225	445	361	-	311	-	34	-	426
2°	NMS 100/250B/A	125	100	140	1213	280	280	690	260	220	410	315	-	440	25	-	-	100	18	-	24	275	275	443	-	500	-	450	-	8	545
1°	NMS 100/250A/A	125	100	140	1286	280	280	713	260	220	410	315	457	-	-	-	100	-	18	24	-	275	275	516	479	-	368	-	40	-	648

Flanges EN 1092-2

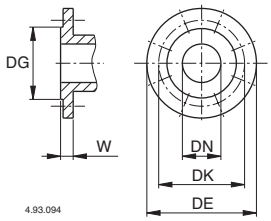

mm						
DN	DG	DK	DE	Holes		W
				N°	Ø	
32	76	100	140	4	19	18
40	84	110	150	4	19	18
50	99	125	165	4	19	20
65	118	145	185	4	19	20
80	132	160	200	8	19	22
100	156	180	220	8	19	24
125	184	210	250	8	19	24

CALPEDA ROMANIA - INFINITY PUMPS SRL
Tel: 0268.33.47.47 / 0722.244.944
vanzari@calpeda.ro | www.calpeda.ro

B-NM, B-NMS

Close Coupled Centrifugal Pumps
with flanged connections

Dimensions and weights

1

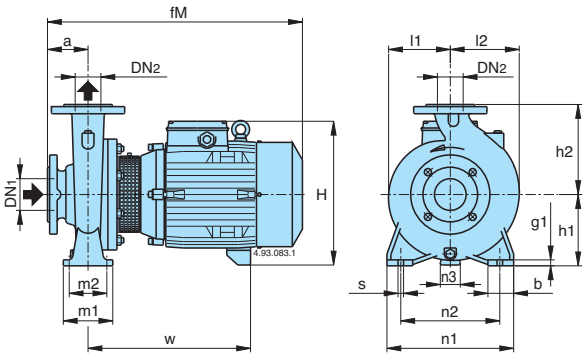

2

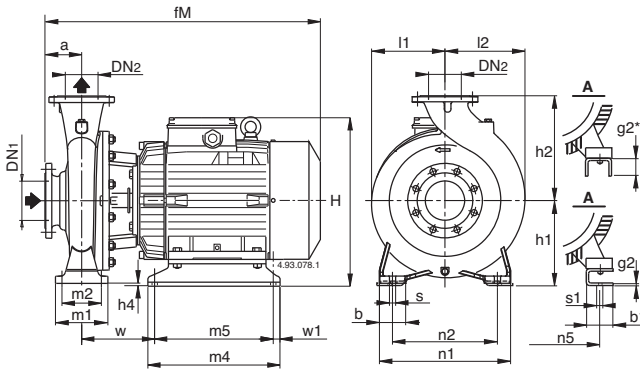

Picture	B- NM	mm																									kg
		DN1	DN2	a	fM	h1	h2	H	h4	m1	m2	n1	n2	n3	n5	w1	b	b1	s	s1	l1	l2	w	m4	m5	g1	g2	B-NM
1	B-NM 32/12D-F B-NM 32/12S/A-A/A	50	32	80	405	112	140	240	-	100	70	190	140	37	-	-	50	-	14	-	93	97	245	-	-	12	-	27-27 30-28
1	B-NM 32/16B/A B-NM 32/16A/B	50	32	80	410 450	132	160	260	-	100	70	240	190	47	-	-	50	-	14	-	120	120	250 290	-	-	12	-	38,5 42
1	B-NM 32/20D/B B-NM 32/20C/A B-NM 32/20A/B	50	32	80	450 475 475	160	180	288 298 298	-	100	70	240	190	45 60 60	-	-	50	-	14	-	140	140	290 295 295	-	-	12	-	47,5 56,5 58
1	B-NM 40/12C/A-F/A B-NM 40/12A/B	65	40	80	410 450	112	140	240	-	100	70	210	160	37	-	-	50	-	14	-	100	113	250 290	-	-	12	-	33-31 36
1	B-NM 40/16C/B B-NM 40/16B/A B-NM 40/16A/B	65	40	80	450 475 475	132	160	260 270 270	-	100	70	240	190	47 45 45	-	-	50	-	14	-	121	122	290 295 295	-	-	10	-	43 50 53
1* 1	B-NM 40/20C/B-D/B B-NM 40/200A/A-AR/A-B/A	65	40	100	495 583	160	180	298 320	-	100	70	265	212	60 49	-	-	50	-	14	-	142	142	295 334	-	-	12	-	59,5-59 80,5-75
2	B-NM 4025/C/C B-NM 4025/B/C B-NM 4025/A/C	65	40	100	635 685 710	192	225	377	12	125	95	320	250	-	216	20	65	69	14	12	175	175	174	298	258	-	6	124 130 159,5
1	B-NM 50/12F/B B-NM 50/12D/A B-NM 50/12A/B-S/B	65	50	100	470 495 495	132	160	260 270 270	-	100	70	240	190	47 45 45	-	-	50	-	14	-	122	137	290 295 295	-	-	10	-	44 52 54,5-54
1*	B-NM 50/160A/B-B/B	65	50	100	583	160	180	320	-	100	70	265	212	49	-	-	50	-	14	-	126	140	334	-	-	12	-	80-74,5
2	B-NM 50/200B/C B-NM 50/200A/C B-NM 50/200S/C	65	50	100	695 745 769	192	200	377	32	100	70	265	212	-	216	20	50	69	14	12	140	153	234	298	258	-	6	123 132 154
2	B-NM 5025/C/C B-NM 5025/B/C	65	50	100	685 710	192	225	377	12	125	95	320	250	-	216	20	65	69	14	12	175	175	174	298	258	-	6	135 156
2	B-NM 50/25A	65	50	100	766	180	225	386	-	125	95	320	250	-	254	20	65	60	14	15	175	175	166	394	354	-	20*	-
1	B-NM 65/12E/A	80	65	100	500	160	180	298	-	125	95	280	212	60	-	-	65	-	14	-	130	154	300	-	-	12	-	57,3
1*	B-NM 65/125A/B-C/B	80	65	100	588	160	180	320	-	125	95	280	212	49	-	-	65	-	14	-	130	154	339	-	-	12	-	80,5-74,5
1*	B-NM 65/160D/B B-NM 65/160C/C	80	65	100	583 660	160	200	320 345	-	125	95	280	212	49 40	-	-	65	-	14	-	140	179	334 430	-	-	12	-	80,2 101
2	B-NM 65/160B/C B-NM 65/160A/C-AR	80	65	100	745 770	192	200	377	32	125	95	280	212	-	216	20	65	69	14	12	140	179	234	298	258	-	6	140 152
2	B-NM 65/200C/C	80	65	100	775	192	225	377	12	125	95	320	250	-	216	20	65	69	14	12	159	179	239	298	258	-	6	160
2	B-NM 65/250C/B	80	65	100	825	202	250	408	2	160	120	360	280	-	254	20	80	90	18	14	179	195	245	400	360	-	42*	210
1*	B-NM 80/160E/B B-NM 80/160D/C	100	80	125	608 685	180	225	340 365	-	125	95	320	250	60 50	-	-	65	-	14	-	153	181	334 430	-	-	12	-	89,4 109
2	B-NM 80/160C/C B-NM 80/160B/C	100	80	125	775 800	192	225	377	12	125	95	320	250	-	216	20	65	69	14	12	153	181	239	298	258	-	6	149 161
2	B-NM 80/16A	100	80	125	789	180	225	386	-	125	95	320	250	-	254	20	65	60	14	15	153	181	164	394	354	-	20*	-

* Version without coupling guard

CALPEDA ROMANIA - INFINITY PUMPS SRL
Tel: 0268.33.47.47 / 0722.244.944
vanzari@calpeda.ro | www.calpeda.ro

B-NM, B-NMS

Close Coupled Centrifugal Pumps
with flanged connections

Dimensions and weights

1

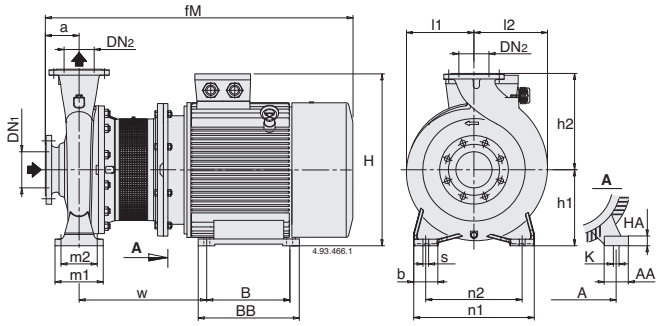

1°

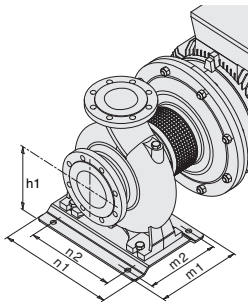

2

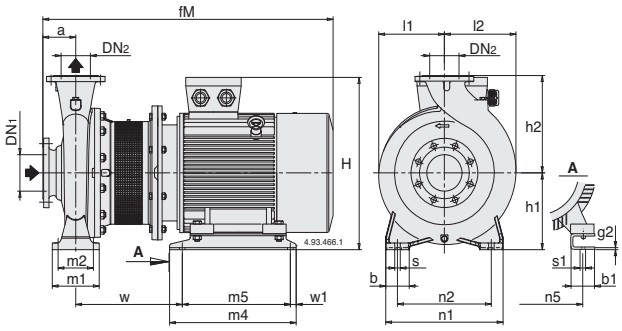

2°

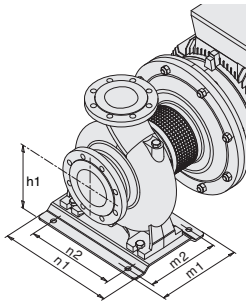

Picture	B-NMS	mm																												kg
		DN1	DN2	a	fM	h1	h2	H	m1	m2	n1	n2	A	n5	w1	b	AA	b1	s	K	s1	l1	l2	w	BB	m4	B	m5	HA	g2	
2	B-NMS 65/200A-B	80	65	100	864	180	225	386	125	95	320	350	-	254	20	65	-	60	14	-	15	159	179	331	-	394	-	354	-	20	
2	B-NMS 65/250B/A	80	65	100	961	200	250	486	160	120	360	280	-	279	20	80	-	70	18	-	15	179	195	333	-	440	-	400	-	20	
1	B-NMS 65/250A/B	80	65	100	1009	200	250	515	160	120	360	280	318	-	-	80	70	-	18	19	-	200	200	406	355	-	305	-	25	-	353
2	B-NMS 80/200B/A	100	80	125	936	180	250	387	125	95	345	280	-	254	20	65	-	60	14	-	15	175	194	331	-	350	-	310	-	5	
1	B-NMS 80/200A/A	100	80	125	986	180	250	466	125	95	345	280	279	-	-	65	65	-	14	15	-	170	194	394	328	-	279	-	20	-	266
2	B-NMS 80/250E/A	100	80	125	936	200	280	407	160	120	400	315	-	254	20	80	-	60	18	-	15	191	210	331	-	394	-	354	-	6	
2	B-NMS 80/250D/A	100	80	125	986	200	280	486	160	120	400	315	-	279	20	80	-	70	18	-	15	191	212	333	-	440	-	400	-	20	287
1	B-NMS 80/250C/A	100	80	125	1034	200	280	515	160	120	400	315	318	-	-	80	70	-	18	19	-	200	210	406	355	-	305	-	25	-	
1°	B-NMS 80/250B/A	100	80	125	1129	225	280	563	298	258	410	315	356	-	-	-	80	-	18	19	-	225	225	445	361	-	311	-	34	-	
2°	B-NMS 80/250A/A	100	80	125	1198	280	280	690	260	220	410	315	-	406	25	-	-	100	18	-	24	275	275	443	-	500	-	450	-	8	
2	B-NMS 100/200D/A-E/B	125	100	125	936	200	280	407	160	120	360	280	-	254	20	80	-	60	18	-	15	180	212	331	-	394	-	354	-	6	
2	B-NMS 100/200C/A	125	100	128	1034	200	280	535	160	120	360	280	-	279	20	80	-	70	18	-	15	180	212	345	-	440	-	400	-	20	
1	B-NMS 100/200B/A	125	100	125	1034	200	280	515	160	120	360	280	318	-	-	80	70	-	18	19	-	200	212	406	355	-	305	-	25	-	352
1°	B-NMS 100/200A/A	125	100	125	1129	225	280	563	298	258	410	315	356	-	-	-	80	-	18	19	-	225	225	445	361	-	311	-	34	-	
2°	B-NMS 100/250B/A	125	100	140	1213	280	280	690	260	220	410	315	-	440	25	-	-	100	18	-	24	275	275	443	-	500	-	450	-	8	
1°	B-NMS 100/250A/A	125	100	140	1286	280	280	713	260	220	410	315	457	-	-	-	100	-	18	24	-	275	275	516	479	-	368	-	40	-	

Flanges EN 1092-2

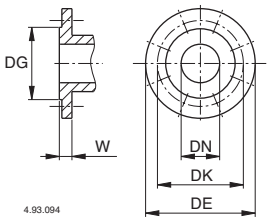

mm						
DN	DG	DK	DE	Holes N°	Holes Ø	W
32	76	100	140	4	19	18
40	84	110	150	4	19	18
50	99	125	165	4	19	20
65	118	145	185	4	19	20
80	132	160	200	8	19	22
100	156	180	220	8	19	24
125	184	210	250	8	19	24

CALPEDA ROMANIA - INFINITY PUMPS SRL
Tel: 0268.33.47.47 / 0722.244.944
vanzari@calpeda.ro | www.calpeda.ro

NM, NMS

Close Coupled Centrifugal Pumps
with flanged connections

Features

NM

Cutting edge hydraulics
The geometry of the impeller and the pump casing are optimized to achieve maximum efficiency and the best suction capability.

Flexible
The option to choose between cast iron and bronze materias for the hydraulic parts in contact with the pumped liquid allows NM series pumps to be selected for use with different types of liquids.

Compact Design
The compact design allows for easy installtion even in confined spaces.

Exclusive design
An innovative, patented guard prevents contact with rotating parts, proving protection to the end user whilst allowing for inspection of the mechanical seal.

Reliable
The bearing and shaft are designed to ensure the reduction of the stress, providing high reliability under all operating conditions.

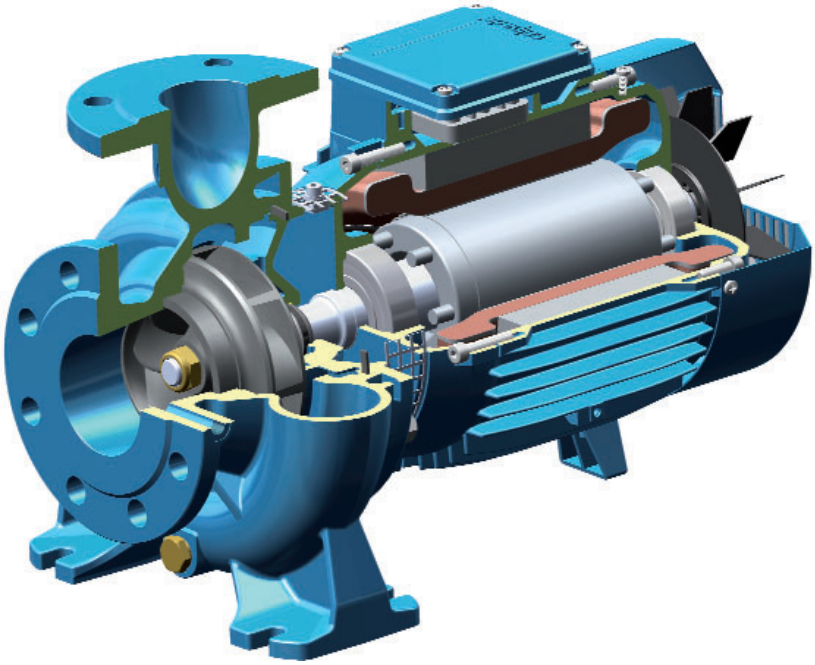

NMS

Cutting edge hydraulics
The geometry of the impeller and the pump casing are optimized to achieve maximum efficiency and the best suction capability.

Flexible
The option to choose between cast iron and bronze materias for the hydraulic parts in contact with the pumped liquid allows NMS series pumps to be selected for use with different types of liquids.

New lantern bracket construction
The lantern brackets incorporate a thrust bearing on the hydraulic side which guarantees the elimination of additional loads on the motor bearings. The flange is sized to be used with standard motors B35.

Exclusive design
An innovative, patented guard prevents contact with rotating parts, proving protection to the end user whilst allowing for inspection of the mechanical seal.

Simplified motor maintenance
The presence of the thrust bearing on the hydraulic side makes it easier to remove the motor, facilitating maintenance operations and eliminating the risks of damage to the hydraulic parts.

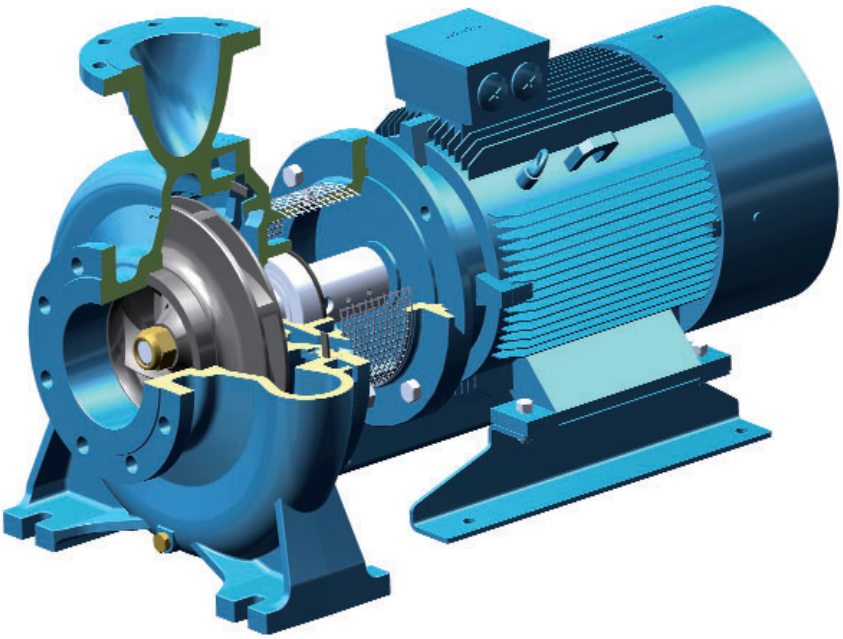

CALPEDA ROMANIA - INFINITY PUMPS SRL
Tel: 0268.33.47.47 / 0722.244.944
vanzari@calpeda.ro | www.calpeda.ro

NM4, NMS4

Close Coupled Centrifugal Pumps
n ≈ 1450 rpm

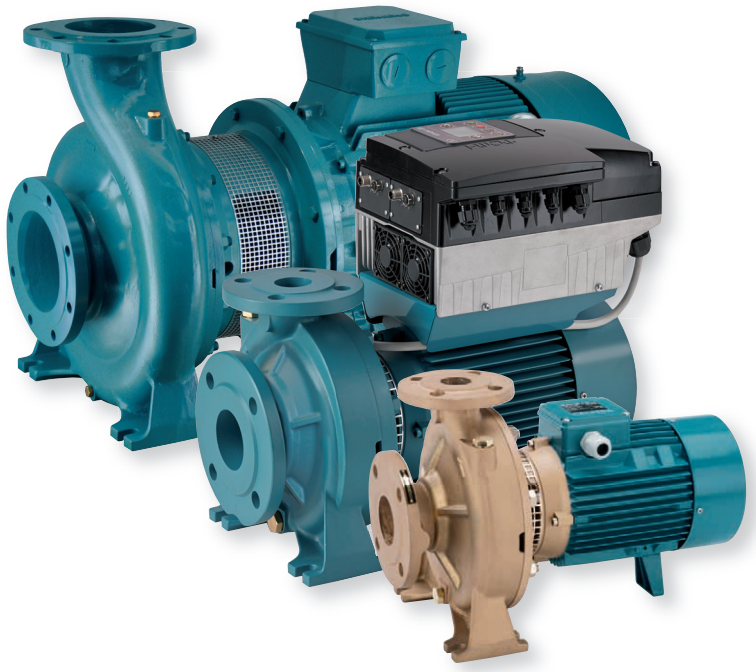

The electropumps NM4, B-NM4, NMS4, B-NMS4 series comply with the European Regulation no. 547/2012.

Materiali

Components	NM4, NMS4	B-NM4, B-NMS4
Pump casing Lantern bracket NM4 Casing cover for NMS4	Cast iron GJL 200 EN 1561	Bronze G-Cu Sn 10 EN 1982
Lantern bracket NMS4	Cast iron GJL 200 EN 1561	
Impeller	Cast iron GJL 200 EN 1561	Bronze G-Cu Sn 10 EN 1982
	Brass P- Cu Zn 40 Pb 2 UNI 5705 For NM4 25/125 - 25/160 - 25/200 - NM4 32/16 - 32/20 - 40/20	
Shaft	Cr-Ni steel AISI 303	Cr Ni Mo steel AISI 316
	AISI 430 from 1,5 kW to 15 kW	
Mechanical seal	Carbon - Ceramic - NBR	
Counter-flanges	Steel Fe 430B UNI 7070	

Construction
Close-coupled centrifugal pumps; electric motor with extended shaft directly connected to the pump up to 15 kW, new bracket construction for standard motors (Stub-shaft construction) from 18,5 to 75 kW with integrated thrust bearing. Pump casing with axial suction and radial delivery on top, main dimensions and performance according to EN 733 with additional sizes for completion.
NM(S)4: version with pump casing and lantern bracket in cast iron.
B-NM(S)4: version with pump casing and lantern bracket/casing cover in bronze. (the pumps are supplied fully painted).

Connections

Sizes	Connections
NM4 25/...	Threaded ports ISO 228
from NM4 32/.. to NMS4 150/..	Flanges according to PN 10, EN 1092-2

Counter-flanges (on request)

Sizes	Flanges
from NM4 32/.. to NM4 50/..	Screwed flanges EN 1092-1, PN 16
from NM4 32/.. to NMS4 150/..	Flanges for welding EN 1092-1, PN 10

Version with frequency converter (on request)

Applications
For clean liquids without abrasives, which are non-aggressive for the pump materials (contents of solids up to 0,2%).
For water supply. For heating, air conditioning, cooling and circulation plants. For civil and industrial applications.
When low noise operating is required. For irrigation.

Operating conditions
Liquid temperature from -10 °C to +90 °C.
Ambient temperature up to 40 °C.
Total suction lift up to 7 m.
Maximum permissible working pressure up to 10 bar (16 bar for NM4 40/16,20; NM4 50/16; NM4 65/16,20,25; NM(S)4 80/16,31,400).
Continuous duty.

Motor
4-pole induction motor, 50 Hz (n ≈ 1450 rpm).
NM4, NMS4: three-phase 230/400 V ± 10% up to 3 kW;
400/690 V ± 10% from 4 to 75 kW.
Insulation class F. Protection IP 54 (IP 55 for NMS4).
Motor suitable for operation with frequency converter from 0,75 kW.
Classification scheme IE3 for three-phase motors from 0,75 kW.
Constructed in accordance with: EN 60034-1; EN 60034-30-1.

Special features on request
- Other voltages. - Frequency 60 Hz (as per 60 Hz data sheet).
- Protection IP 55. - Special mechanical seal.
- Higher or lower liquid or ambient temperatures.
- Motor suitable for operation with frequency converter up to 0,55 kW.

Coverage chart n ≈ 1450 rpm

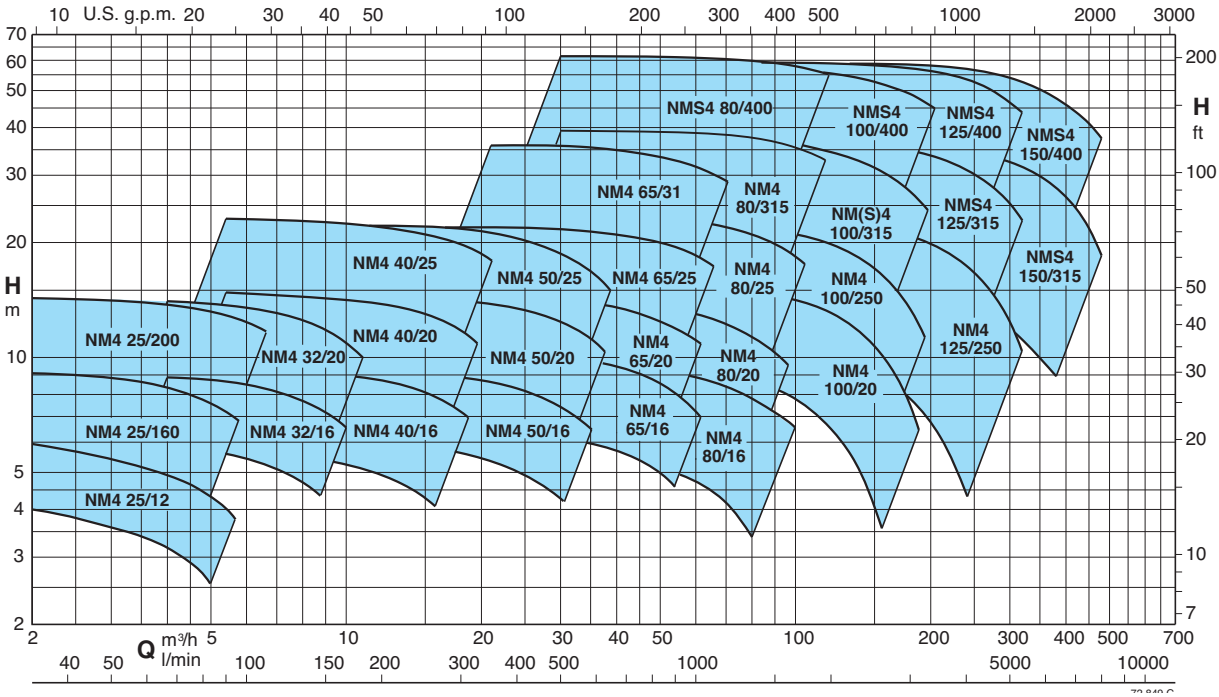

CALPEDA ROMANIA - INFINITY PUMPS SRL
Tel: 0268.33.47.47 / 0722.244.944
vanzari@calpeda.ro | www.calpeda.ro

NM4 EI

Close Coupled Centrifugal Pumps
with flanged connections

Pumps with frequency converter

The **NM4 EI** pumps are available with power from 0,25 kW up to 15 kW, the pumps are equipped with **I-MAT** installed on board which allows to realize a variable-speed system extremely compact and efficient, ideal in applications of water supply and in the distribution of hot and cold water.
The pump is equipped with transducers suitable for operation and is already programmed at the factory.

Advantages
- Energy saving
- Compact design
- Easy to use
- Programmable to suit the system requirements
- Reliability

Costruction
The system comprises of:
- Pump
- Induction motor
- I-MAT Frequency converter
- Motor adapter for the motor mounting of the frequency converter
- Connection cable between frequency converter and induction motor
- Transducers

Main features
Rated motor power output from 0,25 kW to 15 kW
Control range from 870 to 1450 rpm (4-pole)
Protection against dry running
Protection against operations with closed valve ports
Protection against system leakages
Protection against overcurrent in the motor
Protection agains overvoltage and undervoltage of the power supply
Protection against current unbalances between phases

Operating modes

Constant pressure mode
with pressure transducer

In this mode, the system maintains the preset pressure when the flow required by the installation changes.

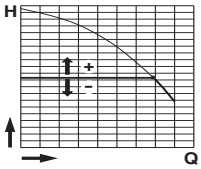

Proportional pressure mode
with pressure transducer

In this mode the system changes the working pressure according to the required flow rate.

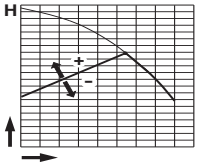

Constant flow mode
with flow meter

In this mode the system maintains a constant flow rate value in a point of the installation according to the required pressure.

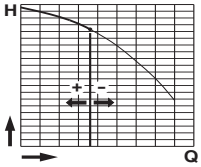

Fixed speed mode
with setting of the speed preferential rotation.

In this mode, by changing the working frequency, you may choose any operational curve included within the working range.

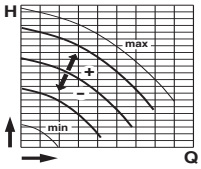

Constant temperature mode
with temperature transducer

In this mode the system keeps the temperature constant inside a system by changing the speed of the pump.

CALPEDA ROMANIA - INFINITY PUMPS SRL
Tel: 0268.33.47.47 / 0722.244.944
vanzari@calpeda.ro | www.calpeda.ro

NM4, NMS4

Close Coupled Centrifugal Pumps

Performance n ≈ 1450 rpm

B - NM4	NM4	P2		Q m³/h	1	1,2	1,5	1,89	2,4	3	3,6	4,2	4,8	5,4	6	6,6	7,5	8,4	9,6	10,8	12	13,2	15
		kW	HP	l/min	16	20	25	31,5	40	50	60	70	80	90	100	110	125	140	160	180	200	220	250
	NM4 25/12A/A	0,25	0,34		6,1	6,05	6	5,9	5,8	5,5	5,2	4,8	4,4	3,9	3,3								
B- NM4 25/160BE	NM4 25/160BE	0,37	0,5		7,7	7,65	7,6	7,55	7,5	7,2	6,9	6,6	6,1	5,5	4,6	3,6							
B- NM4 25/160AE	NM4 25/160AE	0,37	0,5	H	9,2	9,15	9,1	9,05	9	8,7	8,5	8,2	7,8	7,2	6,5	5,6	3,7						
B- NM4 25/200C/A	NM4 25/200C/A	0,37	0,5	m	11,5	11,4	11,4	11,3	11,2	11,1	10,9	10,7	10,5	10,2	9,9	9,5	8,7	7,8	6,2	4,1			
B- NM4 25/200B/A	NM4 25/200B/A	0,55	0,75		13,2	13,2	13,2	13,1	13,1	13	12,9	12,7	12,5	12,3	12	11,6	11,1	10,4	9,1	7,4	4,8		
B- NM4 25/200A/C	NM4 25/200A/C	0,75	1		14,5	14,5	14,5	14,5	14,5	14,4	14,3	14,2	14	13,8	13,6	13,3	12,8	12,2	11,2	9,7	7,5	4,1	

B - NM4	NM4	P2		Q m³/h	2,4	3	3,6	4,8	5,4	6	7,5	8,4	9,6	10,8	12	13,2	15	16,8	18,9	21	24	27	30
		kW	HP	l/min	40	50	60	80	90	100	125	140	160	180	200	220	250	280	315	350	400	450	500
B-NM4 32/16B	NM4 32/16BE	0,37	0,5		7,6	7,5	7,4	7,2	7,1	6,9	6,3	5,9	5,2	4,2									
B-NM4 32/16A	NM4 32/16AE	0,37	0,5		9	8,95	8,9	8,7	8,6	8,5	7,9	7,5	6,8	6	5,1								
B-NM4 32/20B	NM4 32/20BE	0,55	0,75		12,5	12,4	12,3	12	11,8	11,6	10,6	10	8,9	7,6	6,2	4,7							
B-NM4 32/20A/B	NM4 32/20A/B	0,75	1		14,3	14,2	14,1	13,9	13,7	13,5	12,9	12,3	11,3	10,2	8,9	7,5							
B-NM4 40/16C	NM4 40/16C/A	0,37	0,5						6,1	6	5,9	5,8	5,6	5,4	5,2	5	4,5	3,9	3,1	2,3			
B-NM4 40/16B	NM4 40/16B/A	0,55	0,75	H					7,6	7,6	7,6	7,6	7,3	7,1	6,9	6,6	6,3	5,7	5	4	2,7		
B-NM4 40/16A/B	NM4 40/16A/C	0,75	1	m					9,6	9,6	9,6	9,4	9,3	9,1	9	8,8	8,4	7,9	7,2	6,4	5,1	3,5	
B-NM4 40/20B/B	NM4 40/20B/B	1,1	1,5						13	12,9	12,7	12,6	12,4	12,2	12	11,5	10,8	10	8,6	7			
B-NM4 40/20A/B	NM4 40/20A/B	1,1	1,5						14,8	14,7	14,5	14,4	14,2	14	13,8	13,6	13	12,2	11,3	10			
B-NM4 4025/C/C	NM4 40/25C/C	1,5	2						17,4	17,3	17,2	17	16,8	16,6	16,3	16	15,1	13,8	12,1	10,4	7,2	2,8	
B-NM4 4025/B/C	NM4 40/25B/C	2,2	3						21,4	21,5	21,3	21,2	21	20,9	20,8	20,5	20	19,5	18,3	16,4	13,3	10	5
B-NM4 4025/A/B	NM4 40/25A/B	3	4						22,9	22,8	22,9	22,8	22,5	22,5	22,2	22	21,8	21,4	20,4	18,9	16	12,6	8

B - NM4	NM4	P2		Q m³/h	10,8	12	13,2	15	16,8	18,9	21	24	27	30	33	37,8	42	48	54	60	66	75	84	96
		kW	HP	l/min	180	200	220	250	280	315	350	400	450	500	550	630	700	800	900	1000	1100	1250	1400	1600
B-NM4 50/16B/B	NM4 50/16B/C	1,1	1,5		8,2	8,2	8,2	8,1	8	7,8	7,6	7,2	6,7	6,2	5,5	4,4	3,3							
B-NM4 50/16A/B	NM4 50/16A/C	1,1	1,5		9,6	9,6	9,6	9,5	9,5	9,3	9,1	8,8	8,3	7,8	7,2	6,1	4,9	3,1						
	NM4 50/20C/C	1,1	1,5		11,8	11,8	11,7	11,7	11,5	11,3	10,9	10,4	9,8	9	8,1	6,3	4,7							
	NM4 50/20B/C	1,5	2		13,4	13,4	13,4	13,3	13,1	12,9	12,6	12,1	11,5	10,8	9,9	8,2	6,4	3,7						
	NM4 50/20A/C	2,2	3		14,9	14,9	14,9	14,9	14,8	14,6	14,4	14	13,4	12,8	12	10,4	8,6	6						
B-NM4 5025/D/B	NM4 50/25D/B	2,2	3		14,5	14,4	14,3	14	13,7	13,4	13	12,2	11,2	9,7	8,1	5,4	2,3							
B-NM4 5025/C/C	NM4 50/25C/C	2,2	3		17,8	17,8	17,7	17,5	17,2	16,8	16,4	15,7	14,9	13,8	12,4	9,7	6,8							
B-NM4 5025/B/B	NM4 50/25B/B	3	4		20,7	20,7	20,7	20,6	20,4	20	19,5	18,9	18,2	17,1	15,9	13,2	10,6	5,8						
B-NM4 5025/A/B	NM4 50/25A/B	4	5,5		22,7	22,7	22,6	22,5	22,4	22,1	21,6	21	20,2	19,4	18,3	16,4	13,6	9						
B-NM4 65/16C/C	NM4 65/16C/C	1,1	1,5	H							6,1	6,1	6	6	5,9	5,8	5,6	5,3	4,8	4,2				
B-NM4 65/16B/C	NM4 65/16B/C	1,1	1,5	m							7,2	7,1	7,1	7	7	6,8	6,6	6,3	5,8	5,2	4,5			
B-NM4 65/16A/C	NM4 65/16A/C	1,5	2								8,8	8,8	8,7	8,7	8,6	8,5	8,3	8	7,6	7,1	6,4	5,2		
B-NM4 65/16S/A	NM4 65/16S/A	2,2	3								10,2	10,2	10,1	10,1	10	9,9	9,7	9,4	9,1	8,6	8	7	5,7	
B-NM4 65/20B/A	NM4 65/20B/C	2,2	3								11,7	11,7	11,6	11,6	11,5	11,3	11,0	10,6	10,1	9,5	8,7	7,4	5,8	3,3
B-NM4 65/20A/A	NM4 65/20A/B	3	4								14,2	14,2	14,2	14,1	14,1	13,9	13,7	13,4	13,0	12,5	11,8	10,7	9,3	7
B-NM4 65/25B/B	NM4 65/25B/B	4	5,5								17,9	18	18	18	18	17,8	17,5	17	16,3	15,4	14,4	12,5	10,4	7
B-NM4 65/25A/C	NM4 65/25A/C	5,5	7,5								22,2	22,3	22,4	22,4	22,4	22,2	22	21,6	21	20,2	19,3	17,6	15,7	12,6
B-NM4 65/31C/B	NM4 65/31C/B	5,5	7,5								25,8	25,7	25,5	25,3	25	24,4	23,8	22,8	21,5	20	18,2	15	11	
B-NM4 65/31B/B	NM4 65/31B/B	7,5	10								31	31	30,9	30,8	30,6	30,2	29,7	28,8	27,8	26,5	25	22,2	18,6	
B-NM4 65/31A/B	NM4 65/31A/B	9,2	12,5								35,9	35,9	35,8	35,7	35,5	35,1	34,6	33,8	32,8	31,6	30,2	27,8	25	

B-NMS4	NM4 - NMS4	P2		Q m³/h	30	33	37,8	42	48	54	60	66	75	84	96	108	120	132	150	168	180	192	210
		kW	HP	l/min	500	550	630	700	800	900	1000	1100	1250	1400	1600	1800	2000	2200	2500	2800	3000	3200	3500
	NM4 80/16C/C	1,1	1,5		6,1	6,1	5,9	5,8	5,5	5,2	4,9	4,6	4	3,3									
	NM4 80/16B/C	1,5	2		7,8	7,7	7,6	7,5	7,3	7	6,8	6,4	5,9	5,2	4,1								
	NM4 80/16A/C	2,2	3		10	10	9,9	9,8	9,7	9,5	9,3	9	8,5	8	7	5,9							
B- NM4 80/20C	NM4 80/20C/B	2,2	3		10,3	10,2	10,1	10	9,8	9,5	9,1	8,6	7,7	6,6	4,6								
B- NM4 80/20B	NM4 80/20B/A	3	4		12,1	12	11,9	11,8	11,7	11,4	11,1	10,6	9,8	9	7,5	5,7							
B- NM4 80/20A	NM4 80/20A/A	4	5,5		13,9	13,8	13,7	13,6	13,5	13,3	13	12,6	11,8	11	9,6	7,9	6						
B- NM4 80/25C	NM4 80/25C/A	4	5,5		16,9	16,8	16,7	16,6	16,3	15,9	15,4	14,8	13,9	12,7	11,1	9,3	7,2						
B- NMS4 80/250B/A	NM4 80/25B/B	5,5	7,5		20,7	20,6	20,5	20,4	20,3	20	19,6	19,1	18,2	17,1	15,4	13,5	11,4	9*					
B- NMS4 80/250A/A	NM4 80/25A/B	7,5	10	H	23,7	23,7	23,6	23,5	23,3	23	22,7	22,2	21,5	20,5	19	17,2	15,1	12,7*					
B- NM4 80/31C/B	NM4 80/31C/B	9,2	12,5	m	25,7	25,8	25,8	25,8	25,8	25,6	25,4	25	24,4	23,6	22,2	20,4	18,3	15,9					
B- NMS4 80/315B/B	NM4 80/31B	11	15		30,3	30,5	30,6	30,7	30,7	30,7	30,5	30,2	29,6	28,8	27,5	25,9	24,1	22					
B- NMS4 80/315A/B	NM4 80/31A	15	20		36,3	36,4	36,5	36,6	36,6	36,5	36,4	36,1	35,6	35	33,9	32,5	30,9	29	25,3				
B- NMS4 80/315S	NMS4 80/315S	18,5	25		39,1	39,2	39,3	39,4	39,5	39,4	39,3	39,2	38,7	38,1	37,1	35,7	34,1	32,1	28,3	22,5*			
B- NMS4 80/400C/B	NMS4 80/400C/B	18,5	25		42,8	42,8	42,8	42,8	42,7	42,5	42,2	41,8	41	39,8	37,9	35,4	32,4	29,1					
B- NMS4 80/400B/B	NMS4 80/400B/B	22	30		48,2	48,2	48,2	48,2	48,1	47,9	47,7	47,3	46,6	45,7	44,1	42,1	39,5	36,3	30,5				
B- NMS4 80/400A/B	NMS4 80/400A/B	30	40		61,4	61,5	61,5	61,6	61,6	61,5	61,3	61,1	60,7	60,1	59	57,6	55,8	53,7	49,5				
B- NMS4 80/400S	NMS4 80/400S	37	50		61,4	61,5	61,5	61,6	61,6	61,5	61,3	61,1	60,7	60,1	59	57,6	55,8	53,7	49,5	43,9	39,2*		

CALPEDA ROMANIA - INFINITY PUMPS SRL
Tel: 0268.33.47.47 / 0722.244.944
vanzari@calpeda.ro | www.calpeda.ro

NM4, NMS4

Close Coupled Centrifugal Pumps

Performance n ≈ 1450 rpm

B-NMS4	NM4 - NMS4	P2		Q m³/h	48	54	60	66	75	84	96	108	120	132	150	168	180	192	210	240	270	300	330
		kW	HP	l/min	800	900	1000	1100	1250	1400	1600	1800	2000	2200	2500	2800	3000	3200	3500	4000	4500	5000	5500
B- NM4 100/20C/A	NM4 100/20C/A	3	4		9,4	9,3	9,2	9,1	8,9	8,5	8	7,3	6,5	5,6	4								
B- NM4 100/20B/A	NM4 100/20B/A	4	5,5		12	11,9	11,8	11,7	11,5	11,2	10,7	10	9,3	8,4	6,7	4,5							
B- NM4 100/20A/C	NM4 100/20A/C	5,5	7,5		15,2	15,2	15,1	15	14,9	14,7	14,3	13,8	13,1	12,2	10,7	9	7,5*	6*					
B- NMS4 100/250B/A	NM4 100/25B/B	7,5	10		19,5	19,5	19,4	19,3	19	18,7	18,2	17,5	16,6	15,6	13,8	11,7	10	8,4	5,5				
B- NMS4 100/250A/A	NM4 100/25A/B	9,2	12,5		22,3	22,3	22,2	22,1	21,9	21,7	21,2	20,5	19,8	18,8	17,1	15	13,4	11,7	8,9				
B- NMS4 100/315C/A	NM4 100/31C	11	15	H m	26,9	26,9	26,8	26,6	26,2	25,7	24,9	23,8	22,7	21,3	18,9	15,9	13,7	11,3*					
B- NMS4 100/315B/A	NM4 100/31B	15	20		31,5	31,5	31,4	31,3	31,2	30,8	30,2	29,3	28,2	26,9	24,6	21,8	19,8	17,6*	14*				
B- NMS4 100/315A/A	NMS4 100/315A/A	18,5	25		36,9	36,9	36,8	36,7	36,6	36,4	36	35,3	34,5	33,4	31,4	29	27,2	25,3*	22,2*				
B- NMS4 100/400C/A	NMS4 100/400C/A	22	30		41,3	41,2	41,1	41	40,7	40,4	39,8	39	38	36,5	34	31	28,7	26					
B- NMS4 100/400B/A	NMS4 100/400B/A	30	40		50,2	50,1	50	49,9	49,7	49,4	48,8	48	47,1	46	44	41,3	39,5	37	33,5*				
B- NMS4 100/400A/A	NMS4 100/400A/A	37	50		58,2	58,1	58	57,9	57,8	57,6	57,2	56,3	55,7	54,5	52,7	50,5	49	47	44*				

B-NMS4	NM4 - NMS4	P2		Q m³/h	84	96	108	120	132	150	168	180	192	210	240	270	300	330	360	390	420	450	480
		kW	HP	l/min	1400	1600	1800	2000	2200	2500	2800	3000	3200	3500	4000	4500	5000	5500	6000	6500	7000	7500	8000
B- NMS4 125/250E/A	NM4 125/25E/B	5,5	7,5		11	10,8	10,5	10,1	9,7	9,1	8,3	7,8	7,2	6,2	4,4								
B- NMS4 125/250D/A	NM4 125/25D/B	7,5	10		14	13,9	13,7	13,4	13	12,4	11,6	11	10,4	9,4	7,4	5,1							
B- NMS4 125/250C/A	NM4 125/25C/B	9,2	12,5		16,7	16,6	16,4	16,2	15,9	15,4	14,6	14,1	13,5	12,5	10,4	8,2	5,8						
B- NMS4 125/250B/A	NM4 125/25B	11	15		19,3	19,2	19,1	18,9	18,7	18,2	17,5	17	16,3	15,3	13,3	10,9	8,2						
B- NMS4 125/250A/A	NM4 125/25A	15	20		22,7	22,7	22,6	22,4	22,2	21,8	21,2	20,8	20,1	19,3	17,4	15	12,4	9,3					
B- NMS4 125/315C/A	NMS4 125/315C/A	18,5	25		27,9	27,8	27,7	27,6	27,2	26,5	25,6	24,9	24	22,8	20,2	17	13,5	9,5*					
B- NMS4 125/315B/A	NMS4 125/315B/A	22	30		31,8	31,7	31,6	31,5	31,1	30,6	29,7	29,1	28,5	27,3	24,9	22	18,5	14,3*					
B- NMS4 125/315A/A	NMS4 125/315A/A	30	40		36,8	36,8	36,7	36,6	36,4	35,9	35,2	34,7	34,2	33,2	31	28,4	25,3	21,6*					
B- NMS4 125/400C/A	NMS4 125/400C/A	37	50	H m	45,4	45,3	45,2	45,1	44,9	44,4	43,7	43	42	40	37	33	28,5*	23,5*					
B- NMS4 125/400B/A	NMS4 125/400B/A	45	60		51,4	51,3	51,2	51,1	50,9	50,4	49,7	49	48,2	46,8	44	40,5	36*	31,5*					
B- NMS4 125/400A/A	NMS4 125/400A/A	55	75		59,2	59,1	59	58,9	58,7	58,2	57,7	57,2	56,7	55,7	53,5	50,5	46,5*	42,5*					
B- NMS4 150/315D/A	NMS4 150/315D/A	18,5	25						22,8	22,6	22,3	22	21,7	21,1	20	18,6	17	15,1	13	10,6	8*		
B- NMS4 150/315C/A	NMS4 150/315C/A	22	30						25,6	25,4	25,1	24,9	24,7	24,2	23,3	22	20,4	18,5	16,5	14,1	11,6*	8,9*	
B- NMS4 150/315B/A	NMS4 150/315B/A	30	40						30,6	30,6	30,5	30,3	30,1	29,7	29	27,9	26,5	24,9	23	20,8	18,3*	15,4*	
B- NMS4 150/315A/A	NMS4 150/315A/A	37	50						35,6	35,6	35,5	35,4	35,3	35,2	34,6	33,7	32,5	31	29,2	27,1	24,7*	21,8*	18,5*
B- NMS4 150/400C/A	NMS4 150/400C/A	45	60						45	44,9	44,7	44,5	44	43,5	42,5	40,5	38,5	36	33,5	30,5	27*	23,5*	19,5*
B- NMS4 150/400B/A	NMS4 150/400B/A	55	75						50,8	50,7	50,5	50,3	50	49,5	48,5	47	45	43	40,5	38	35*	32*	28,5*
B- NMS4 150/400A/A	NMS4 150/400A/A	75	100						58,8	58,7	58,6	58,5	58,3	57,9	57	55,5	54	52	49,5	47	44*	41*	37,5

NM4, NMS4 Standard construction.
B-NM4, B-NMS4 Bronze construction.

P2 Rated motor power output.
H Total head in m.

* Maximum suction lift 1-2 m.
Tolerances according to UNI EN ISO 9906:2012

Rated currents

P2		230 V Δ / 400 V Y		
kW	HP	IN A	IN A	IA/IN
0,25	0,34	1,4	0,8	3,7
0,37	0,5	1,65	0,95	4,2
0,55	0,75	2,6	1,5	4,8
0,75	1	3,3	1,9	7,2
1,1	1,5	5	2,9	6,6
1,5	2	6	3,5	8,3
2,2	3	8,6	5	8,6
3	4	11,1	6,4	5,8

P2		400 V Δ / 690 V Y		
kW	HP	IN A	IN A	IA/IN
4	5,5	8,3	4,8	7,2
5,5	7,5	12,5	7,2	7,2
7,5	10	16	9,2	7,1
9,2	12,5	19	11	7,4
11	15	22,5	13	9,6
15	20	29	16,7	9,1
18,5	25	34,5	19,9	6,4
22	30	40,5	23,4	6,7
30	40	55	31,8	6,7
37	50	67	38,5	6,8
45	60	81	46,8	6,9
55	75	96	55,4	7,5
75	100	130	75	6,8

P2 Rated motor power output.
IA/IN D.O.L. starting current / Nominal current

CALPEDA ROMANIA - INFINITY PUMPS SRL
Tel: 0268.33.47.47 / 0722.244.944
vanzari@calpeda.ro | www.calpeda.ro

NM4, NMS4

Close Coupled Centrifugal Pumps

Characteristic curves n ≈ 1450 rpm

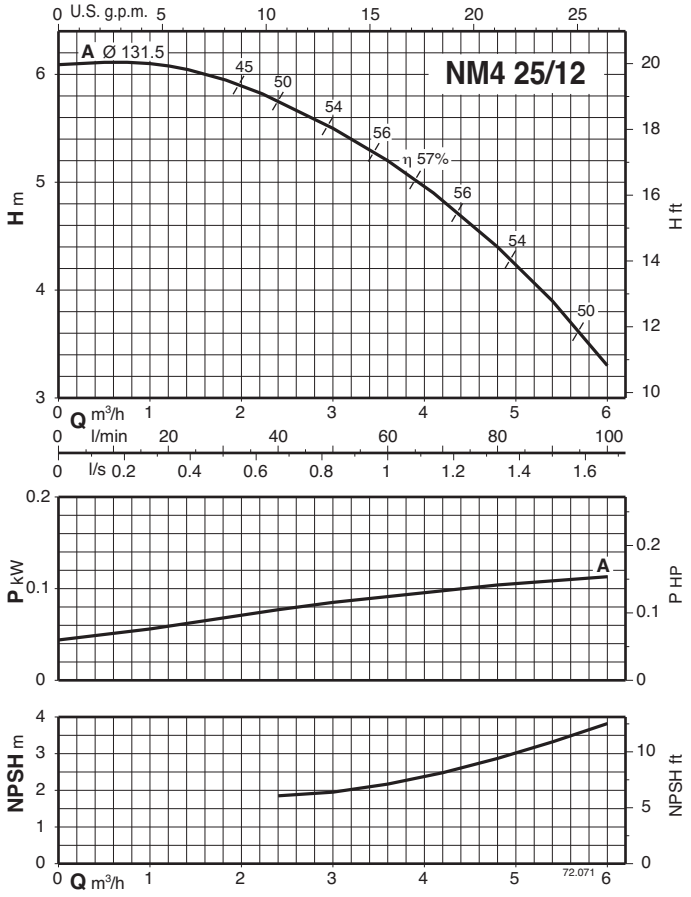

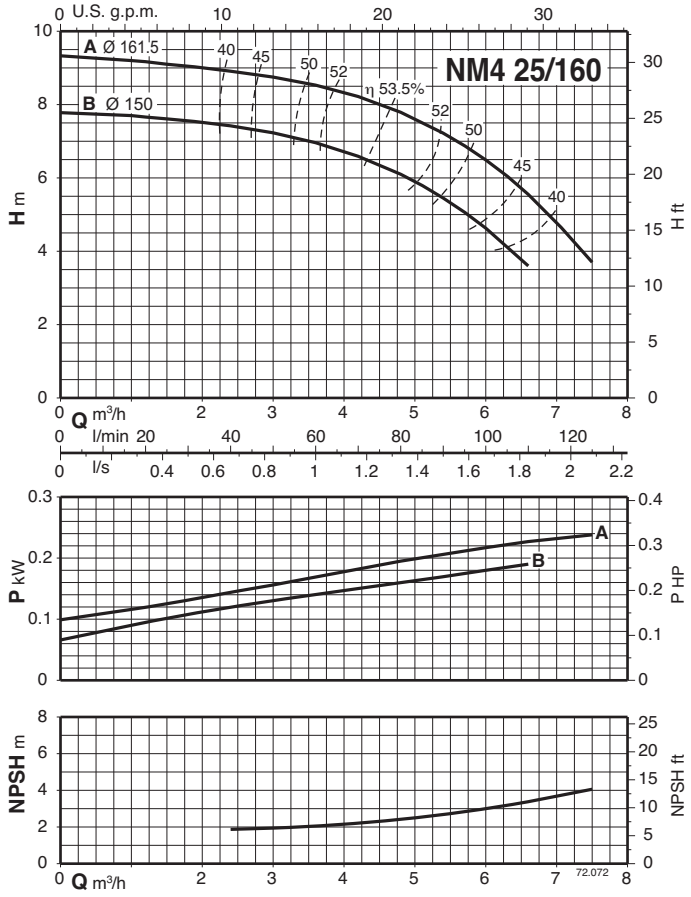

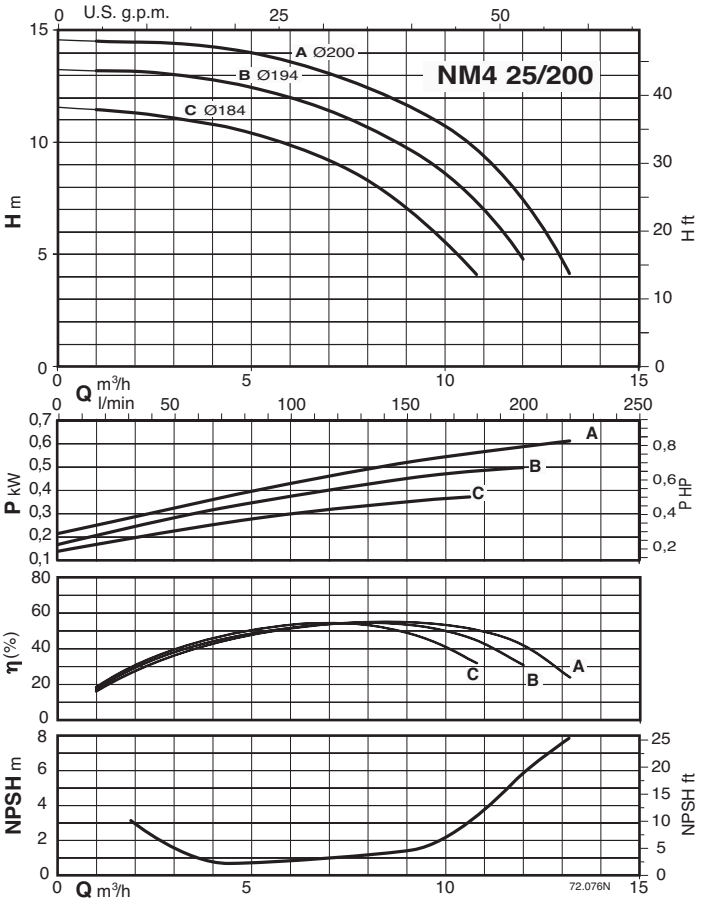

CALPEDA ROMANIA - INFINITY PUMPS SRL
Tel: 0268.33.47.47 / 0722.244.944
vanzari@calpeda.ro | www.calpeda.ro

NM4, NMS4

Close Coupled Centrifugal Pumps

Characteristic curves n ≈ 1450 rpm

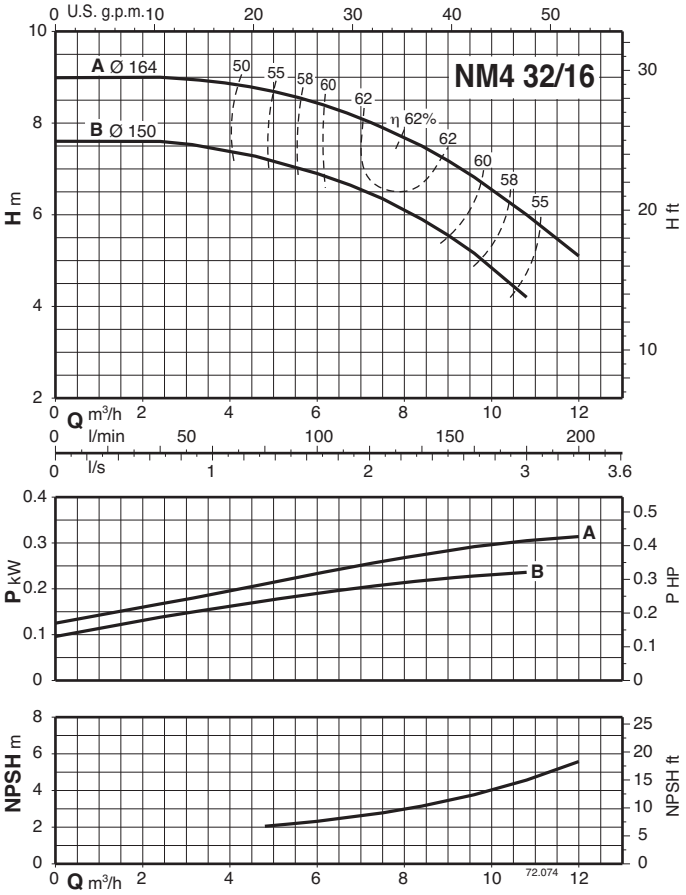

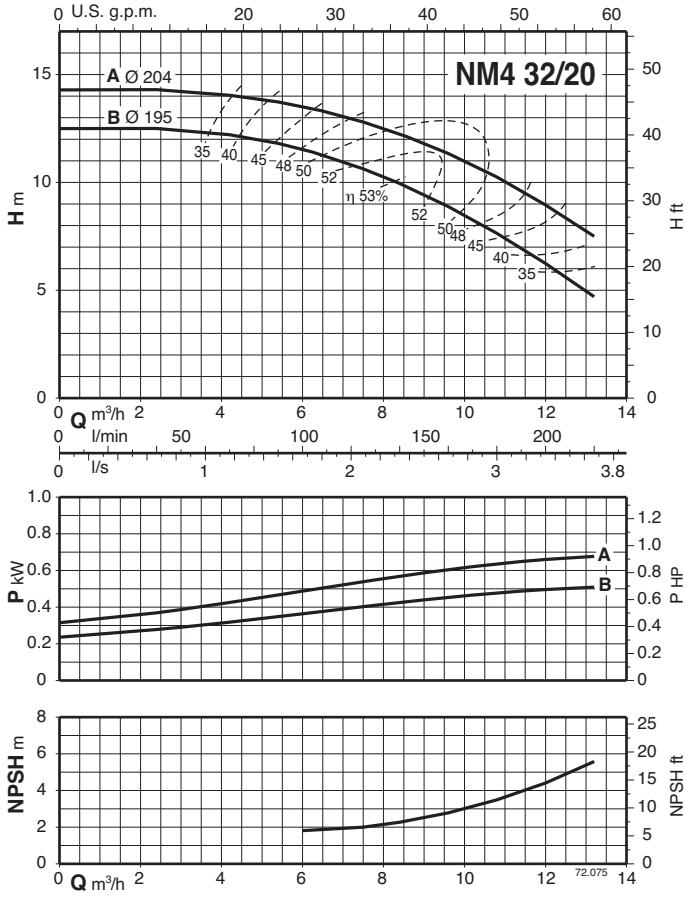

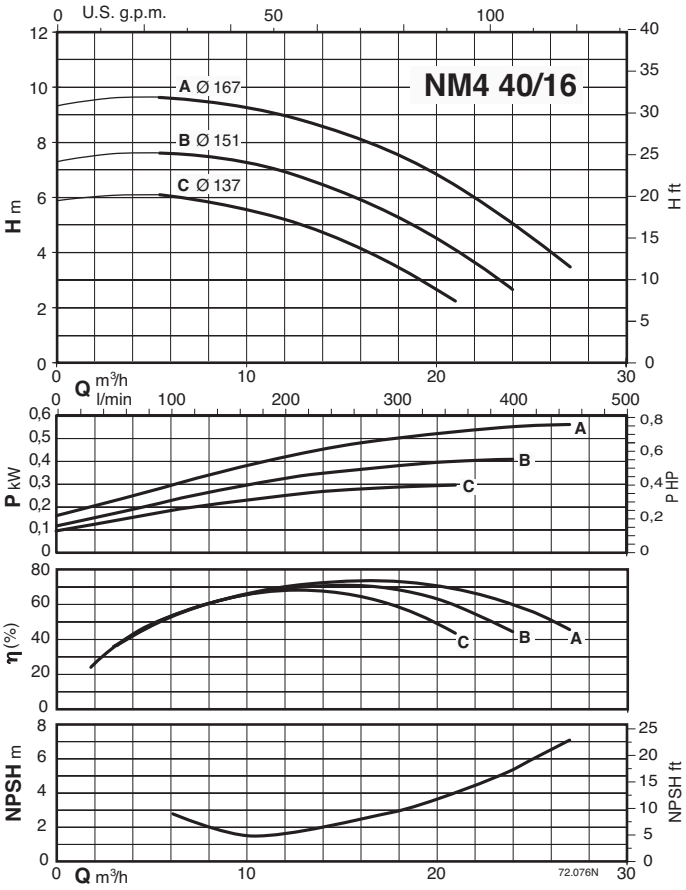

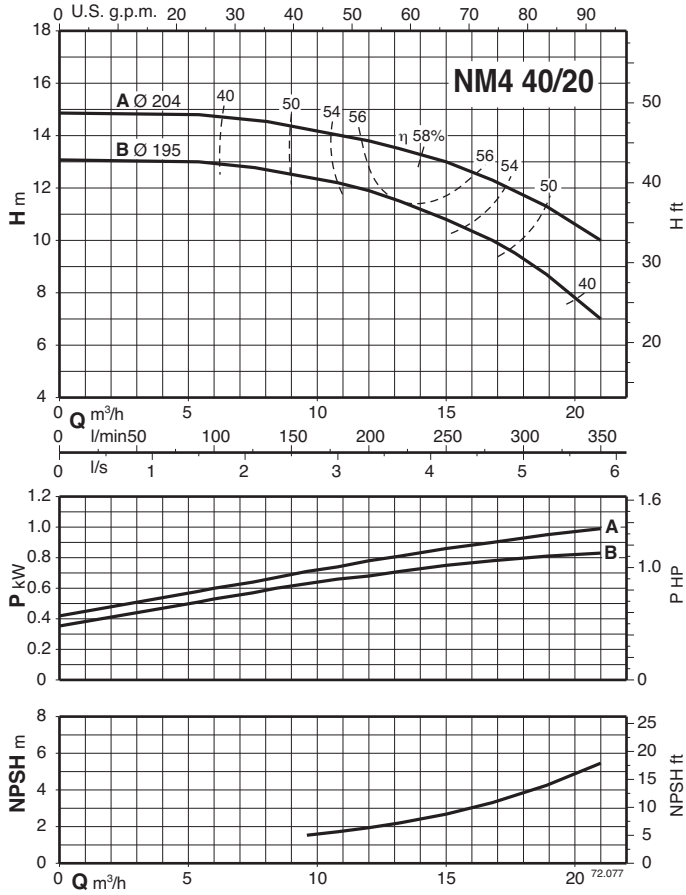

CALPEDA ROMANIA - INFINITY PUMPS SRL
Tel: 0268.33.47.47 / 0722.244.944
vanzari@calpeda.ro | www.calpeda.ro

NM4, NMS4

Close Coupled Centrifugal Pumps

Characteristic curves n ≈ 1450 rpm

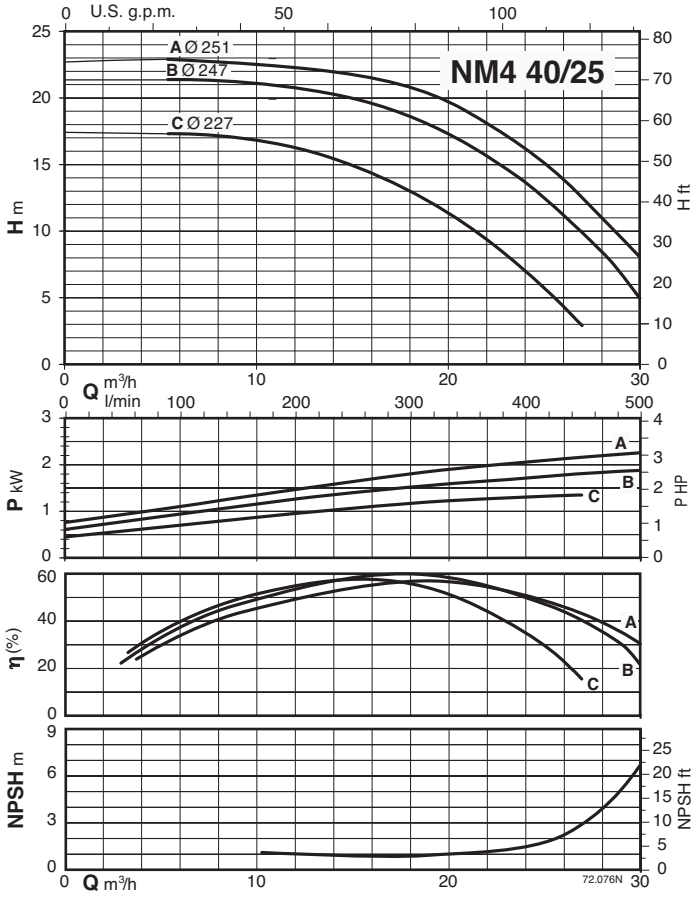

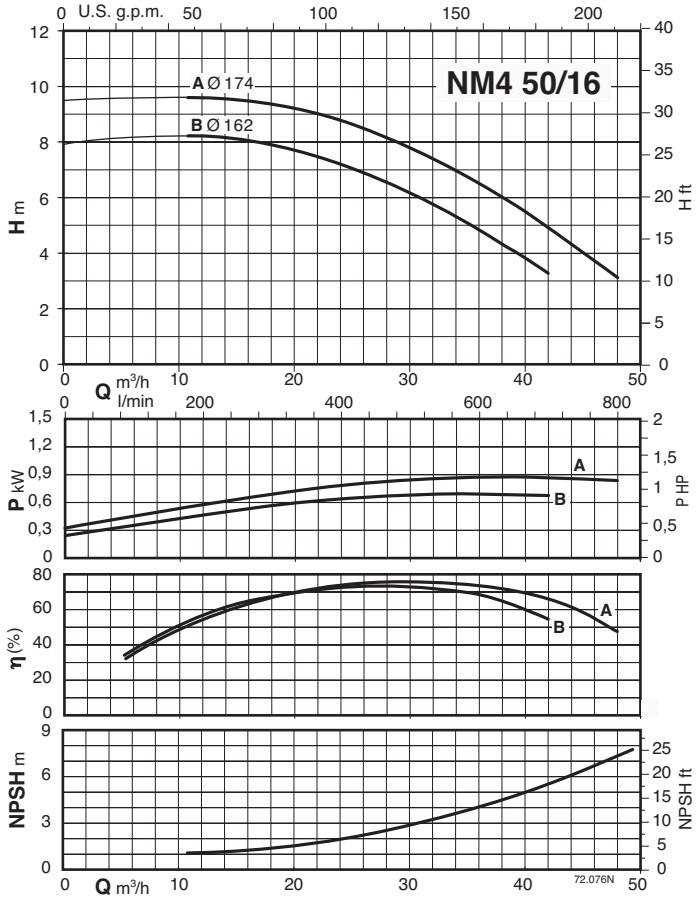

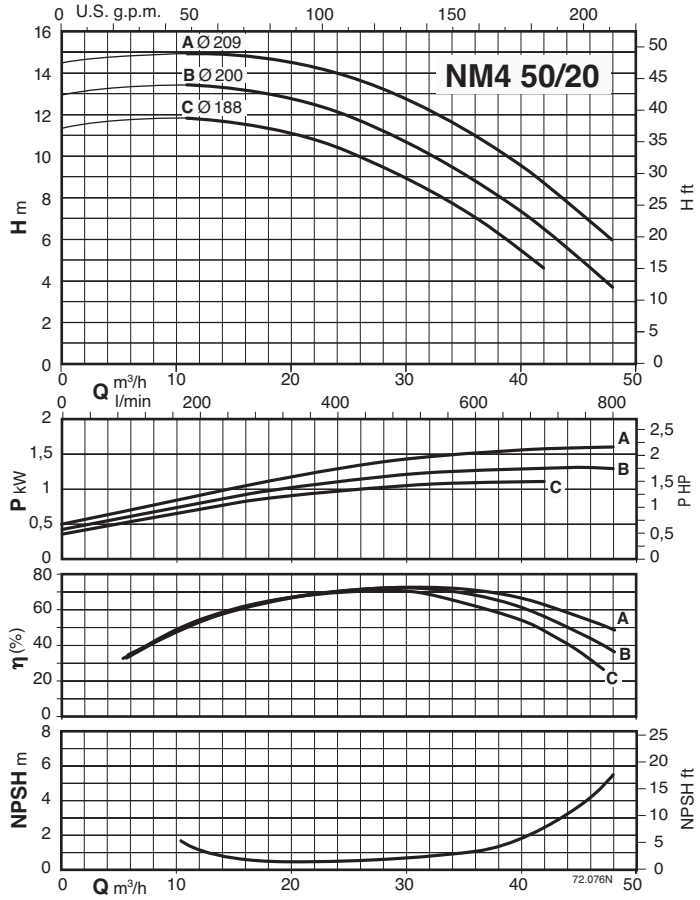

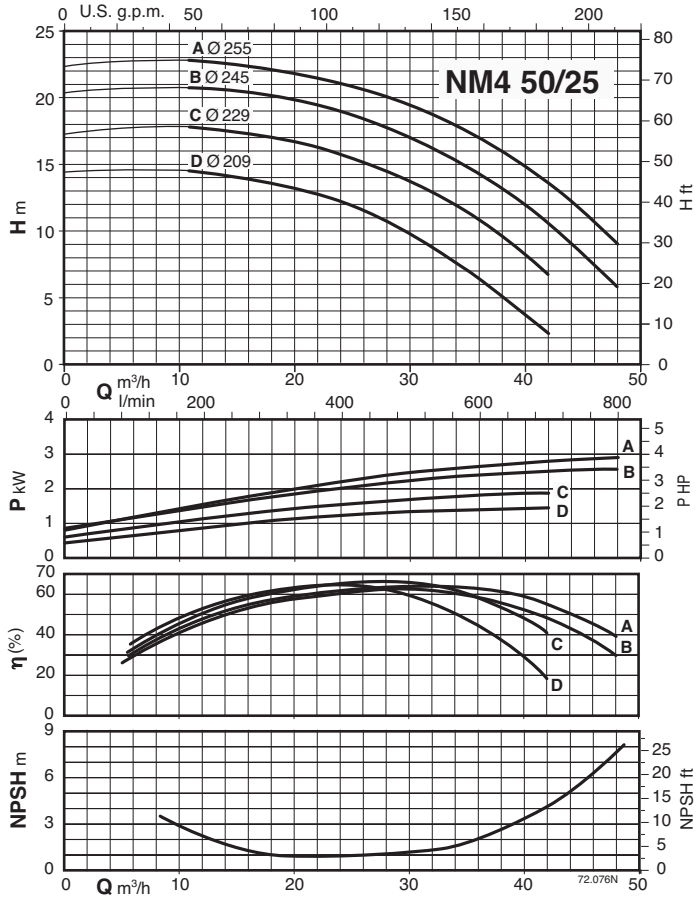

CALPEDA ROMANIA - INFINITY PUMPS SRL
Tel: 0268.33.47.47 / 0722.244.944
vanzari@calpeda.ro | www.calpeda.ro

NM4, NMS4

Close Coupled Centrifugal Pumps

Characteristic curves n ≈ 1450 rpm

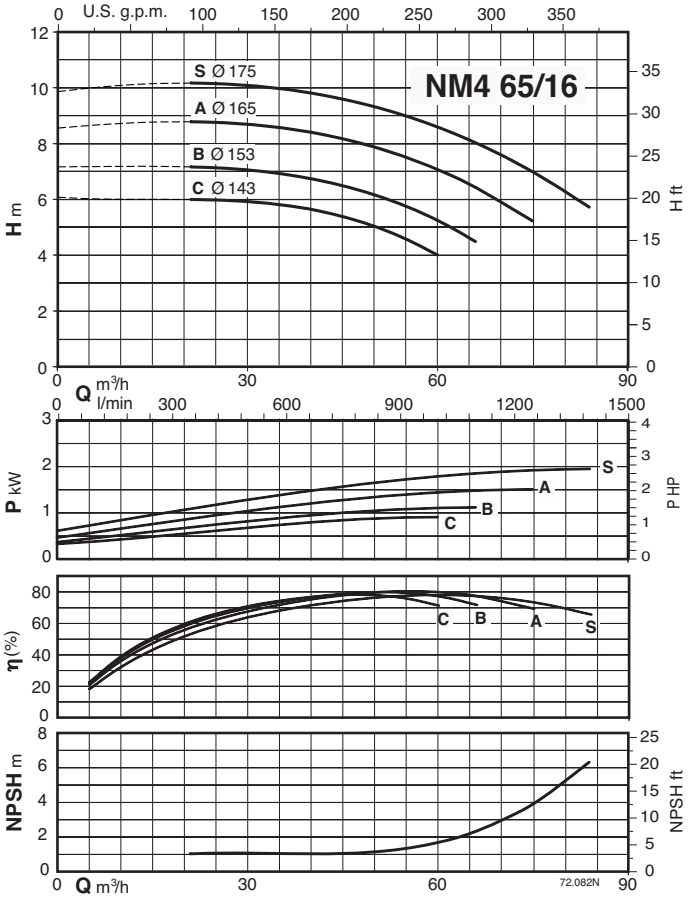

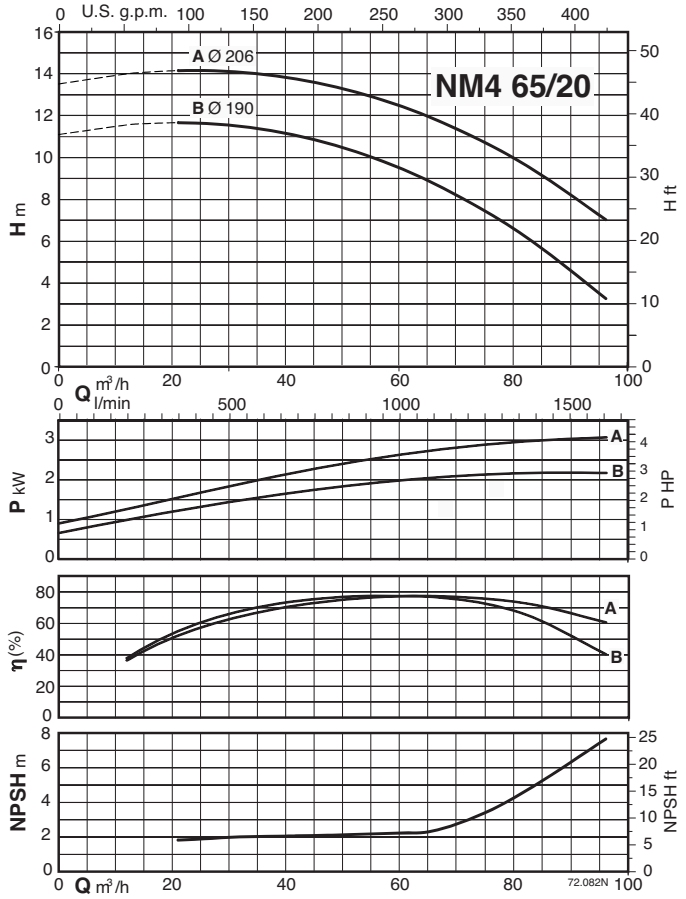

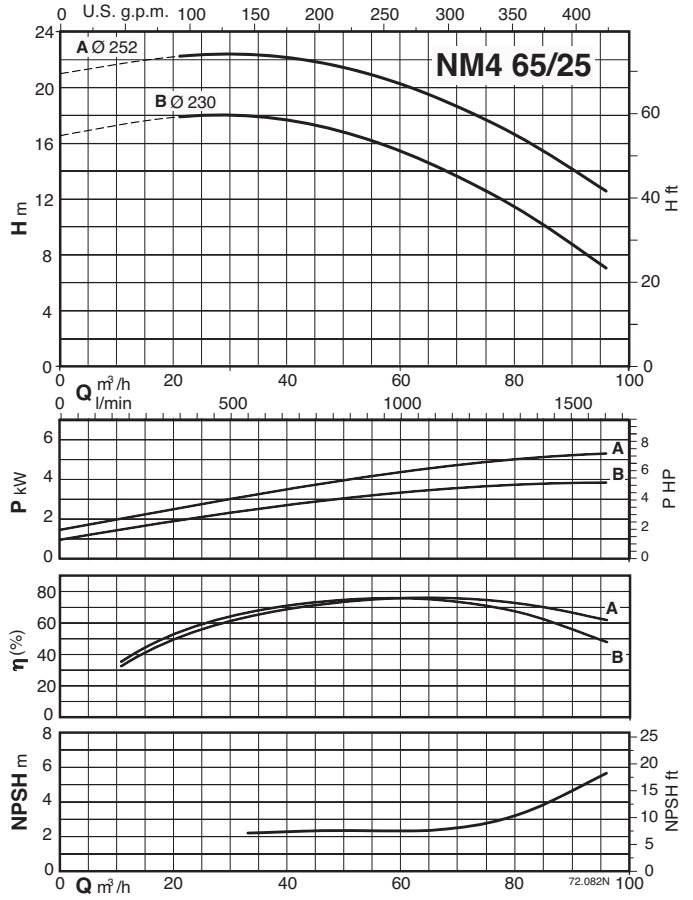

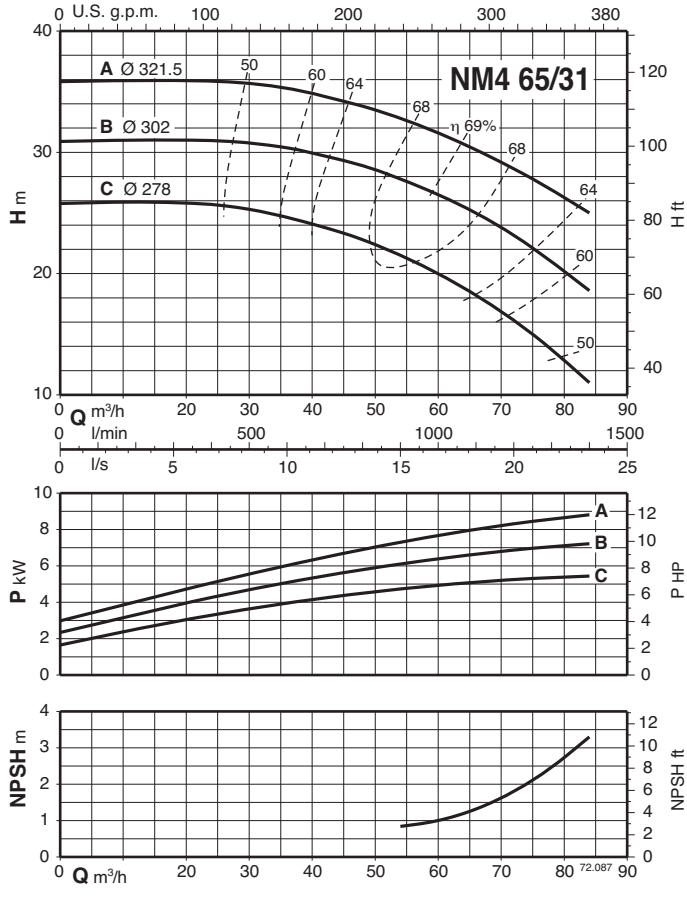

CALPEDA ROMANIA - INFINITY PUMPS SRL
Tel: 0268.33.47.47 / 0722.244.944
vanzari@calpeda.ro | www.calpeda.ro

NM4, NMS4

Close Coupled Centrifugal Pumps

Characteristic curves n ≈ 1450 rpm

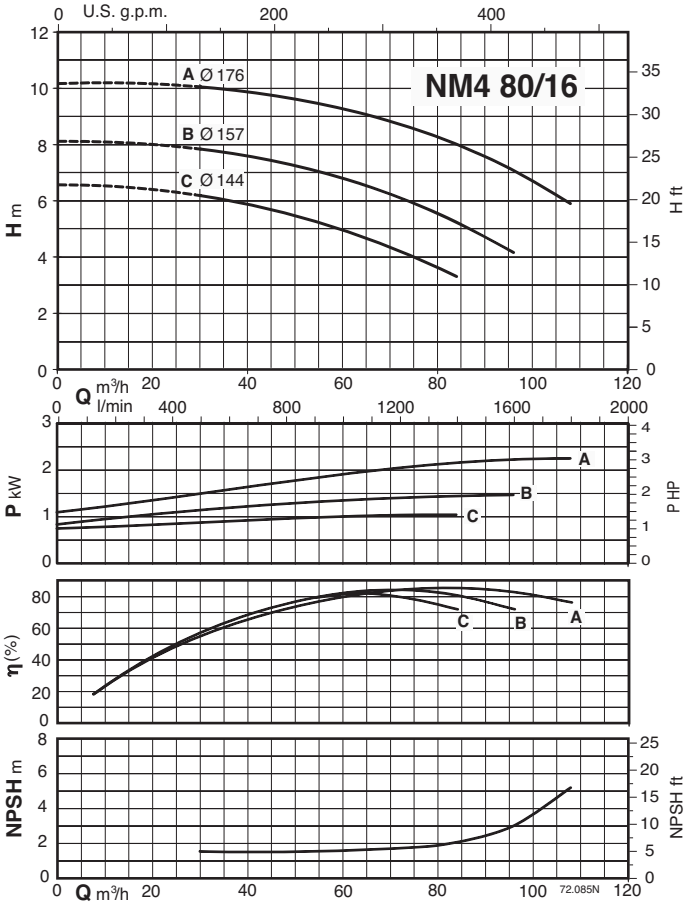

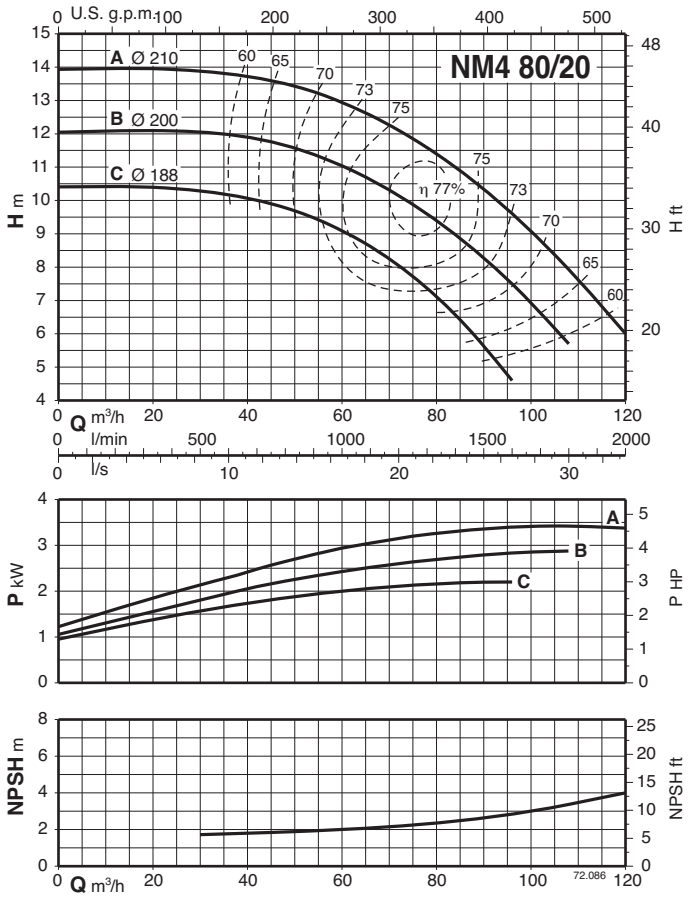

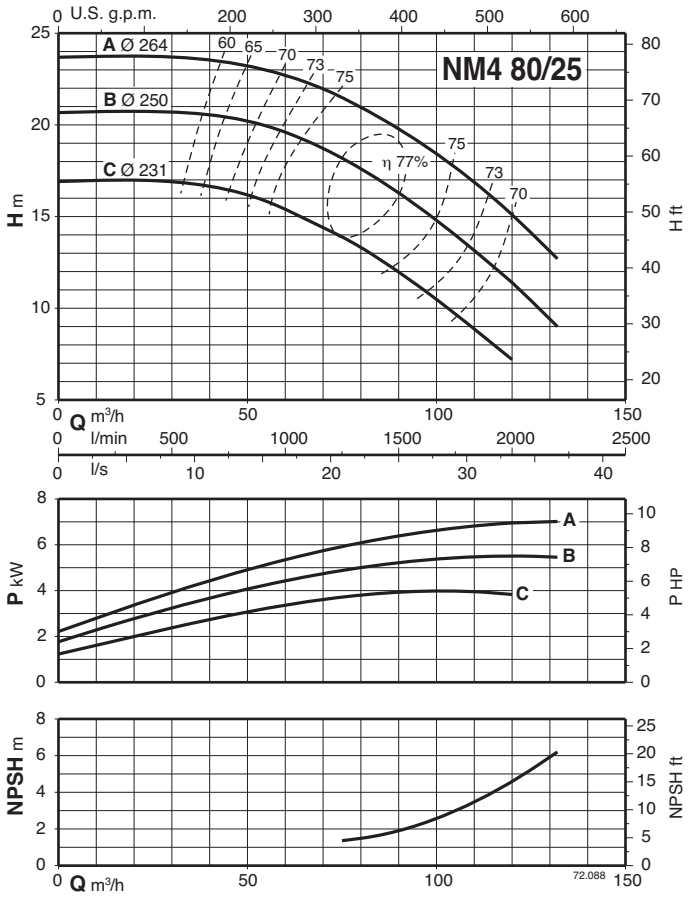

CALPEDA ROMANIA - INFINITY PUMPS SRL
Tel: 0268.33.47.47 / 0722.244.944
vanzari@calpeda.ro | www.calpeda.ro

NM4, NMS4

Close Coupled Centrifugal Pumps

Characteristic curves n ≈ 1450 rpm

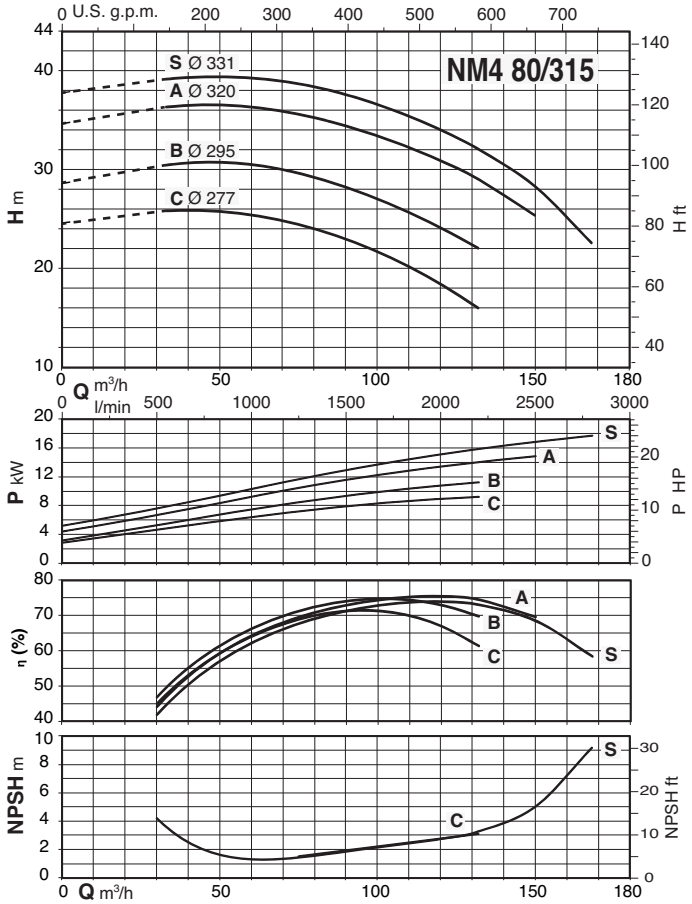

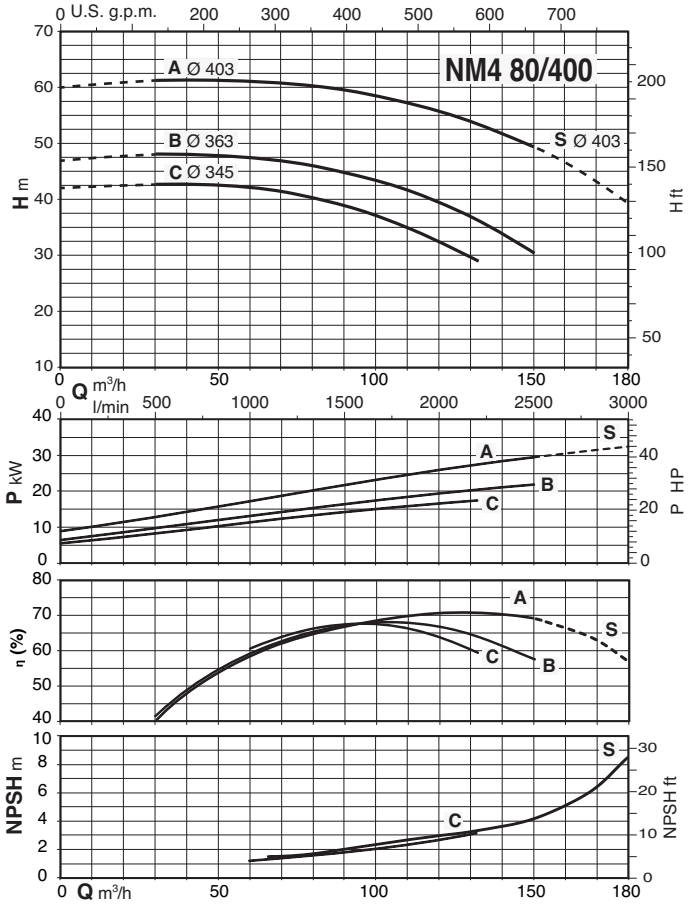

CALPEDA ROMANIA - INFINITY PUMPS SRL
Tel: 0268.33.47.47 / 0722.244.944
vanzari@calpeda.ro | www.calpeda.ro

NM4, NMS4

Close Coupled Centrifugal Pumps

Characteristic curves n ≈ 1450 rpm

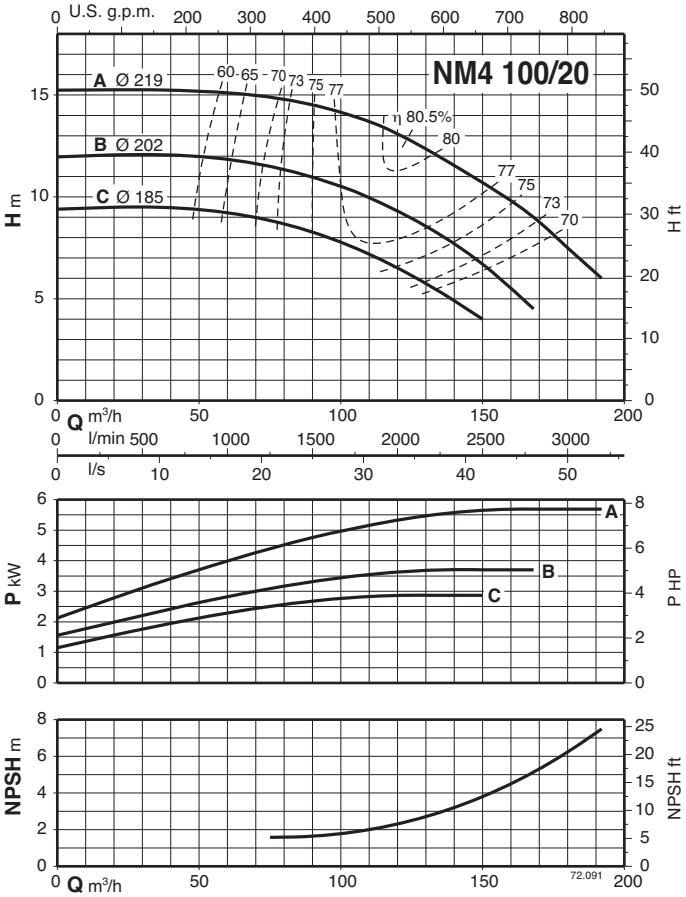

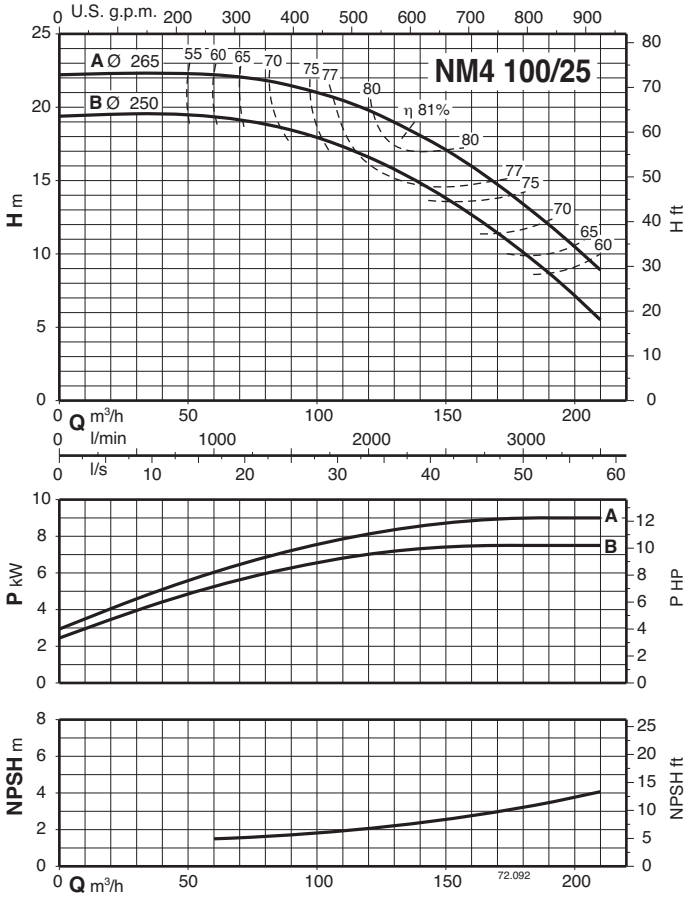

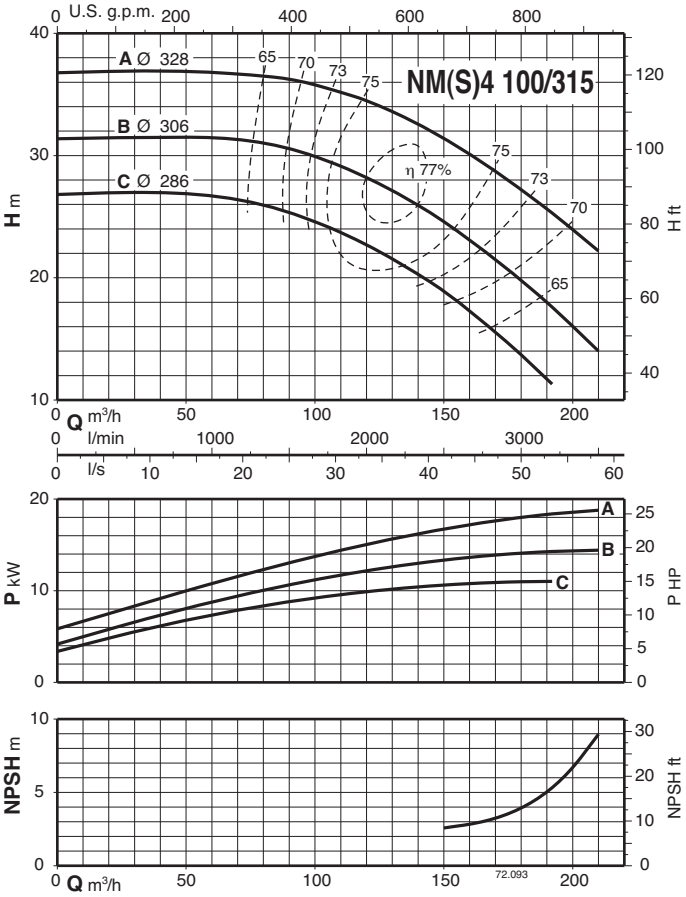

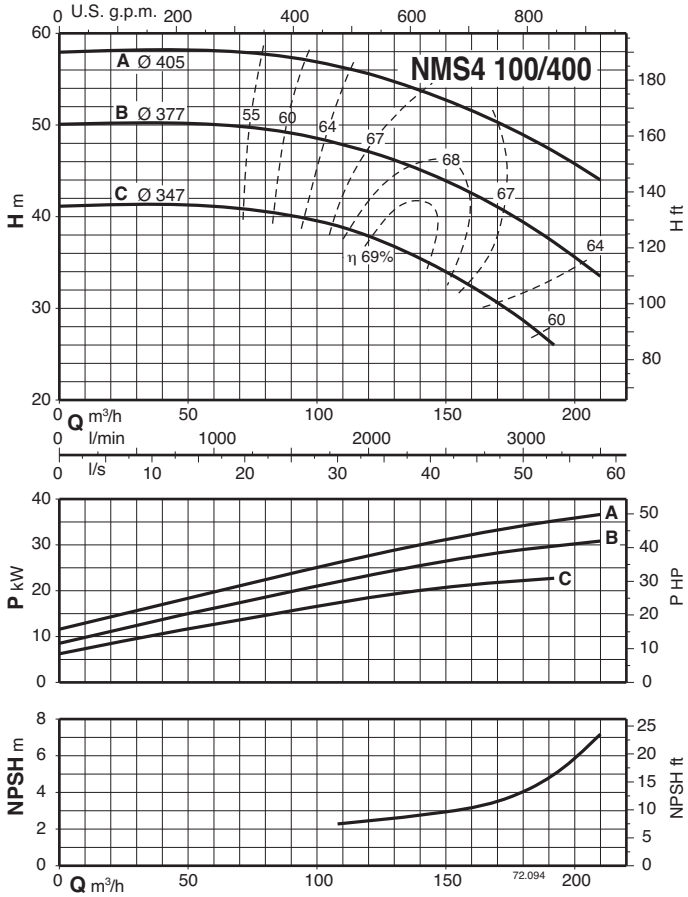

CALPEDA ROMANIA - INFINITY PUMPS SRL
Tel: 0268.33.47.47 / 0722.244.944
vanzari@calpeda.ro | www.calpeda.ro

NM4, NMS4

Close Coupled Centrifugal Pumps

Characteristic curves n ≈ 1450 rpm

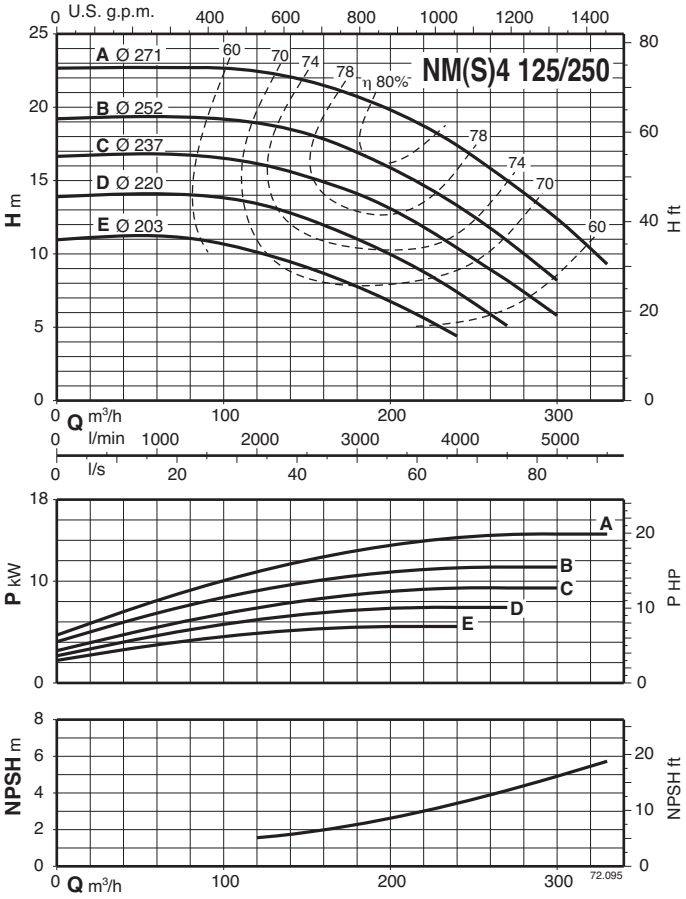

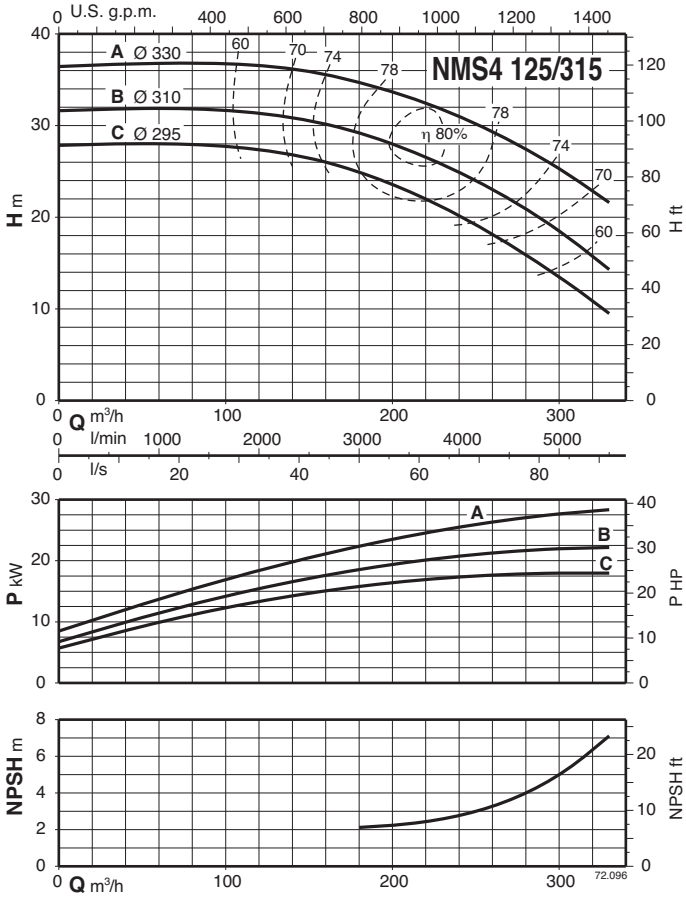

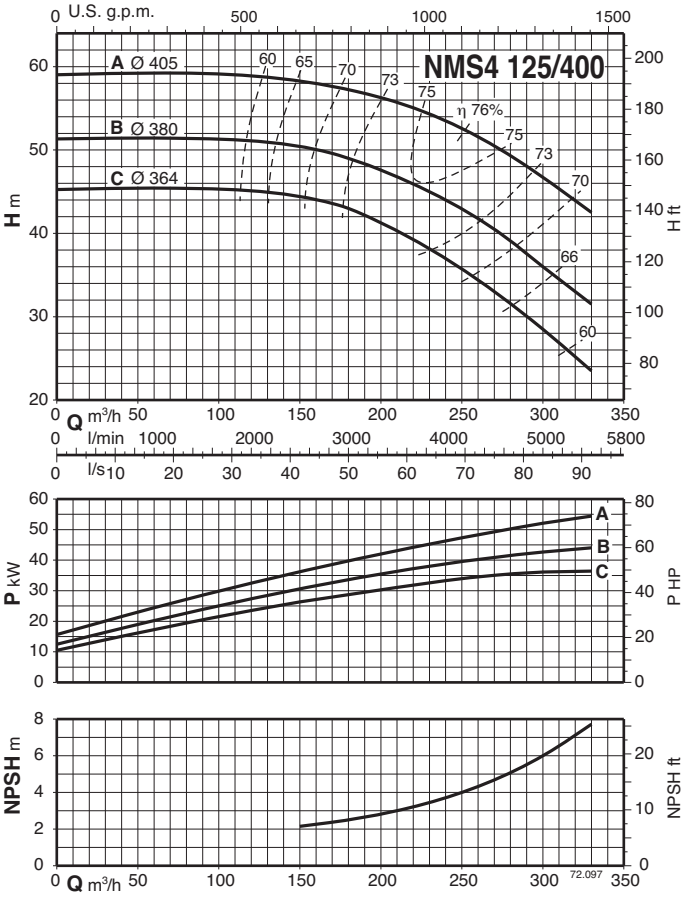

CALPEDA ROMANIA - INFINITY PUMPS SRL
Tel: 0268.33.47.47 / 0722.244.944
vanzari@calpeda.ro | www.calpeda.ro

NM4, NMS4

Close Coupled Centrifugal Pumps

Characteristic curves n ≈ 1450 rpm

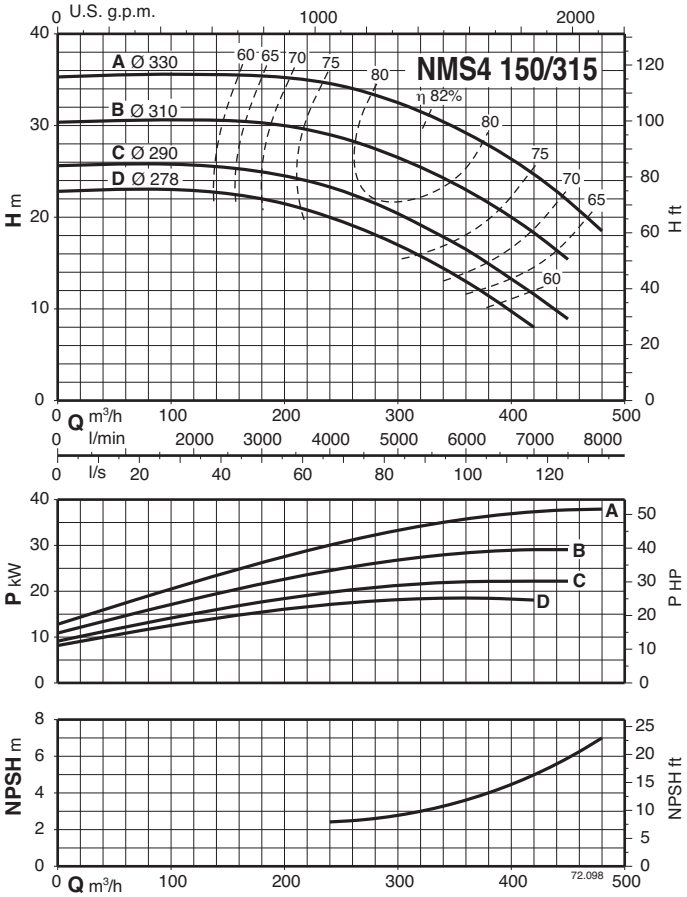

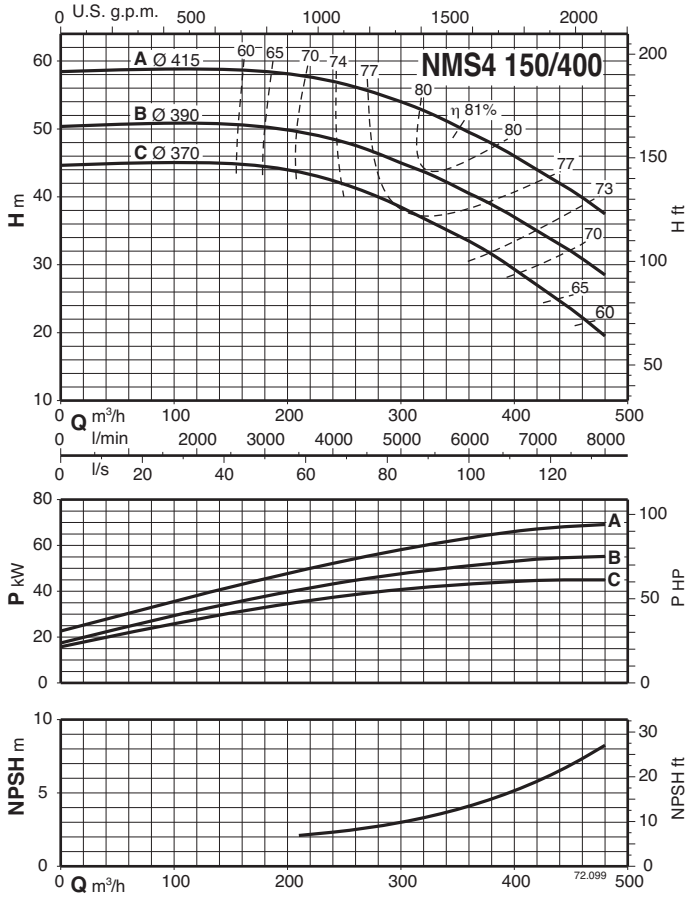

CALPEDA ROMANIA - INFINITY PUMPS SRL
Tel: 0268.33.47.47 / 0722.244.944
vanzari@calpeda.ro | www.calpeda.ro

NM4 Close Coupled Centrifugal Pumps

Dimensions and weights

1

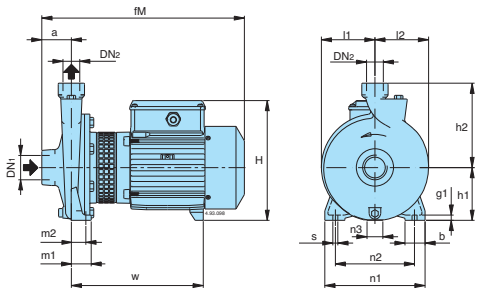

Standard construction

Picture	NM4	DN1	DN2	mm																kg
		ISO 228		a	fM	h1	h2	H	m1	m2	n1	n2	n3	b	s	l1	l2	w	g	
1	NM4 25/12A/A	G 1½	G 1	56	313	90	140	199	37,5	27,5	170	130	9	38	9,5	85	88	250	10	13,5
	NM4 25/160AE-BE			56	380	100	160	228	37,5	27,5	190	150	30	38	9,5	102	102	250	10	17,5
	NM4 25/200B/A-C/A			63	385	125	180	253	45	32,5	245	200	49	45	11,5	125	125	250	11	23-21,5
	NM4 25/200A/C			63	425	125	180	253	45	32,5	245	200	49	45	11,5	125	125	250	11	27

2

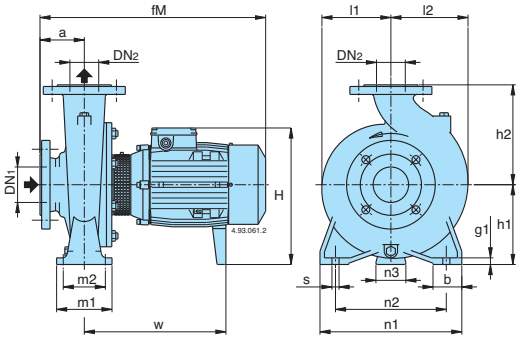

3

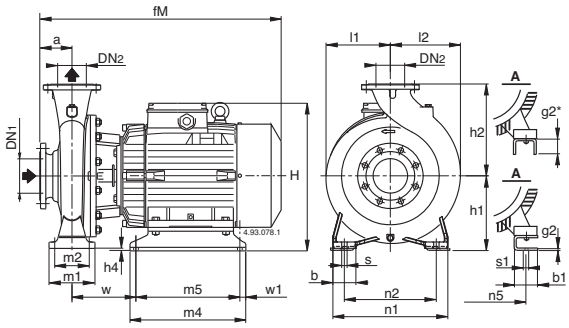

Standard construction

Picture	NM4	mm																										kg
		DN1	DN2	a	fM	h1	h2	H	h4	m1	m2	n1	n2	n3	n5	w1	b	b1	s	s1	l1	l2	w	m4	m5	g1	g2	
2	NM4 32/16AE-BE	50	32	80	410	132	160	260	-	100	70	240	190	47	-	-	50	–	14	-	120	120	255	-	-	12	-	30,5-30
	NM4 32/20BE NM4 32/20A/B	50	32	80	410 450	160	180	288	-	100	70	240	190	62	-	-	50	-	14	-	140	140	255	-	-	12	-	35 42
	NM4 40/16B/A-C/A NM4 40/16A/C	65	40	80	410 450	132	160	268	-	100	70	240	190	47	-	-	50	-	14	-	121	121	255	-	-	10	-	32,4-30,6 39
	NM4 40/20A/B-B/B	65	40	100	495	160	180	298	-	100	70	265	212	62	-	-	50	-	14	-	142	142	295	-	-	12	-	49,6-49
	NM4 40/25C/C NM4 40/25A/B-B/C	65	40	100	495 528	180	225	308 340	-	125	95	320	250	60	-	-	65	-	14	-	175	175	300 279	-	-	15	-	67,7 78-76,6
	NM4 50/16A/C-B/C	65	50	100	495	160	180	298	-	100	70	265	212	62	-	-	50	-	14	-	126	140	295	-	-	12	-	40-39,5
	NM4 50/20B/C-C/C NM4 50/20A/C	65	50	100	505 528	160	200	288 320	-	100	70	265	212	62 60	-	-	50	-	14	-	140	153	310 279	-	-	14	-	52,5-44,5 57
	NM4 50/25C/C-D/B NM4 50/25A/B-B/B	65	50	100	528	180	225	340	-	125	95	320	250	60	-	-	65	-	14	-	175	175	279	-	-	15	-	68 85,5-78
	NM4 65/16A/C-B/C-C/C NM4 65/16S/A	80	65	100	495 528	160	200	288 320	-	125	95	280	212	62 60	-	-	65	-	14	-	140	161	300 279	-	-	12	-	53-49,3-48,7 62,3
	NM4 65/20A/B-B/C	80	65	100	528	180	225	340	-	125	95	320	250	60	-	-	65	-	14	-	159	178	279	-	-	12	-	69-68,7
	NM4 65/25B/C NM4 65/25A/B	80	65	100	543 645	200	250	360 385	-	160	120	360	280	60	-	-	80	-	18	-	179	195	294 405	-	-	15	-	97,4 118
	NM4 65/31C/B-B/B NM4 65/31A/B	80	65	125	670 720	225	280	410	-	160	120	400	315	75	-	-	80	-	18	-	220	220	415 465	-	-	20	-	153-164 176
	NM4 80/16B/C-C/B NM4 80/16A/C	100	80	125	520 553	180	225	308 340	-	125	95	320	250	62 60	-	-	65	-	14	-	153	181	300 279	-	-	12	-	59,6-55,6 69,8
	NM4 80/20A/A-B/A-C/B	100	80	125	563	180	250	340	-	125	95	345	280	60	-	-	65	-	14	-	170	194	289	-	-	15	-	91-82-74,5
	NM4 80/25C/A NM4 80/25B/B-A/B	100	80	125	563 670	200	280	360 385	-	160	120	400	315	60	-	-	80	-	18	-	191	210	289 415	-	-	20	-	102 124-135
	NM4 80/31C/B	100	80	125	720	250	315	435	-	160	120	400	315	90	-	-	80	-	18	-	222	234	465	-	-	17	-	181
3	NM4 80/31A-B	100	80	125	787	260	315	466	10	160	120	400	315	-	254	20	80	74	18	14	222	234	147	435	395	-	6	269-248
2	NM4 100/20B/A-C/A NM4 100/20A/C	125	100	125	563 665	200	280	360 385	-	160	120	360	280	60	-	-	80	-	18	-	180	212	289 400	-	-	20	-	99-90 109
	NM4 100/25B/B NM4 100/25A/B	125	100	140	685 735	225	280	410	-	160	120	400	315	75	-	-	80	-	18	-	205	233	415 465	-	-	20	-	143 152
3	NM4 100/31B-C	125	100	140	802	260	315	466	10	160	120	400	315	-	254	20	80	74	18	14	230	250	147	435	395	-	6	280-261
2	NM4 125/25E/B-D/B NM4 125/25C/B	150	125	140	685 735	250	355	435	-	160	120	400	315	90	-	-	80	-	18	-	235	268	415 465	-	-	20	-	149-161 173
3	NM4 125/25A-B	150	125	140	802	260	355	466	10	160	120	400	315	-	254	20	80	74	18	14	235	268	147	435	395	-	6	261-243

CALPEDA ROMANIA - INFINITY PUMPS SRL
Tel: 0268.33.47.47 / 0722.244.944
vanzari@calpeda.ro | www.calpeda.ro

NM4 Close Coupled Centrifugal Pumps

Dimensions and weights

1

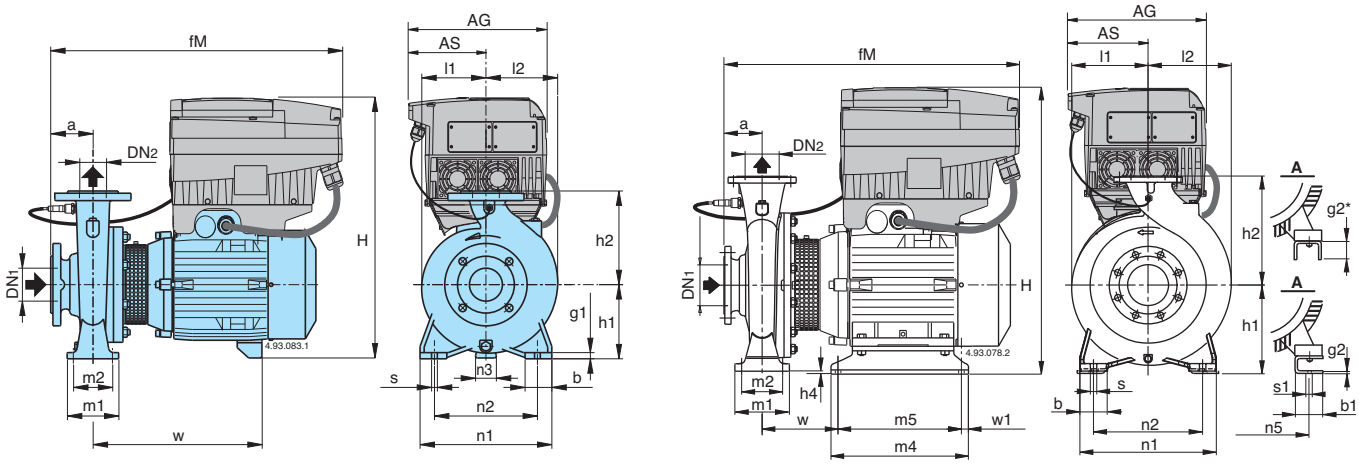

Picture	NM4 EI	mm																												kg
		DN1	DN2	a	fM	AG	AS	h1	h2	H	h4	m1	m2	n1	n2	n3	n5	w1	b	b1	s	s1	l1	l2	w	m4	m5	g1	g2	
1	NM4 EI 32/16AE-BE	50	32	80	440	190	105	132	160	418	-	100	70	240	190	47	-	-	50	-	14	-	120	120	255	-	-	12	-	37-36,4
1	NM4 EI 32/20BE NM4 EI 32/20A/B	50	32	80	440 450	190	105	160	180	466	-	100	70	240	190	62	-	-	50	-	14	-	140	140	255	-	-	12	-	40,9 48,4
1	NM4 EI 40/16B/A-C/A NM4 EI 40/16A/C	65	40	80	440 450	190	105	132	160	418	-	100	70	240	190	47	-	-	50	-	14	-	121	121	255	-	-	10	-	38,4-36,4 45,4
1	NM4 EI 40/20A/B-B/B	65	40	100	495	190	105	160	180	547	-	100	70	265	212	62	-	-	50	-	14	-	142	142	295	-	-	12	-	57,4-56,9
1	NM4 EI 40/25C/C NM4 EI 40/25A/B-B/C	65	40	100	495 528	190 210	105 118	180	225	474 502	-	125	95	320	250	60	-	-	65	-	14	-	175	175	300 279	-	-	15	-	74 85,5-85
1	NM4 EI 50/16A/C-B/C	65	50	100	495	190	105	160	180	454	-	100	70	265	212	62	-	-	50	-	14	-	126	140	295	-	-	12	-	46,4-46
1	NM4 EI 50/20B/C-C/C NM4 EI 50/20A/C	65	50	100	505 528	190 210	105 118	160	200	454 482	-	100	70	265	212	62 60	-	-	50	-	14	-	140	153	310 279	-	-	14	-	59-51 63,4
1	NM4 EI 50/25C/C-D/B NM4 EI 50/25A/B-B/B	65	50	100	528	210	118	180	225	502	-	125	95	320	250	60	-	-	65	-	14	-	175	175	279	-	-	15	-	74,4-74,4 93,0-85,5
1	NM4 EI 65/16B/C-C/C NM4 EI 65/16A/C NM4 EI 65/16S/A	80	65	100	495 495 528	190 190 210	105 105 118	160	200	454 454 528	-	125	95	280	212	62 62 60	-	-	65	-	14	-	140	161	300 300 279	-	-	15	-	54,4-54,4 60,9 61,4
1	NM4 EI 65/20A/B-B/C	80	65	100	528	210	118	180	225	502	-	125	95	320	250	60	-	-	65	-	14	-	159	179	279	-	-	12	-	81 -67,4
1	NM4 EI 65/25B/C NM4 EI 65/25A/B	80	65	100	543 645	210 281	118 153	200	250	522 593	-	160	120	360	280	60	-	-	80	-	18	-	179	195	294 405	-	-	15	-	104,5 130,8
1	NM4 EI 65/31C/B-B/B NM4 EI 65/31A/B	80	65	125	670 720	281 281	153 153	225	280	618	-	160	120	400	315	75	-	-	80	-	18	-	220	220	415 465	-	-	20	-	179-168 190,8
1	NM4 EI 80/16B/C-C/B NM4 EI 80/16A/C	100	80	125	520 553	190 210	105 118	180	225	454 545	-	125	95	320	250	62 60	-	-	65	-	14	-	153	181	300 279	-	-	12	-	67,4-59,4 71,9
1	NM4 EI 80/20A/A-B/A-C/B	100	80	125	563	210	118	180	250	502	-	125	95	345	280	60	-	-	65	-	14	-	170	194	289	-	-	15	-	99-90-81
1	NM4 EI 80/25C/A NM4 EI 80/25B/B-A/B	100	80	125	563 670	210 281	118 153	200	280	522 593	-	160	120	400	315	60	-	-	80	-	18	-	191	210	289 415	-	-	20	-	109,5 150-139
1	NM4 EI 80/31C/B	100	80	125	745	281	153	250	315	613	-	160	120	400	315	90	-	-	80	-	18	-	222	234	465	-	-	17	-	195,8
2	NM4 EI 80/31B NM4 EI 80/31A	100	80	125	790	281 350	153 190	260	315	671 751	10	160	120	400	315	-	254	20	80	74	18	14	222	234	147	435	395	-	6	283 304
1	NM4 EI 100/20B/A-C/A NM4 EI 100/20A/C	125	100	125	563 665	210 281	118 153	200	280	522 593	-	160	120	360	280	60	-	-	80	-	18	-	180	212	289 400	-	-	20	-	107-97,5 123,8
1	NM4 EI 100/25B/B NM4 EI 100/25A/B	125	100	140	685 735	281	153	225	280	618	-	160	120	400	315	75	-	-	80	-	18	-	205	233	415 465	-	-	20	-	166,8 157,8
2	NM4 EI 100/31C NM4 EI 100/31B	125	100	140	805	281 350	153 190	260	315	671 751	10	160	120	400	315	-	254	20	80	74	18	14	230	250	147	435	395	-	6	296 315
1	NM4 EI 125/25E/B-D/B NM4 EI 125/25C/B	150	125	140	685 735	281 281	153 153	250	355	643	-	160	120	400	315	90	-	-	80	-	18	-	235	268	415 465	-	-	20	-	164-176 187,8
2	NM4 EI 125/25B NM4 EI 125/25A	150	125	140	805	281 350	153 190	260	355	671 751	10	160	120	400	315	-	254	20	80	74	18	14	235	268	147	435	395	-	6	378 296

CALPEDA ROMANIA - INFINITY PUMPS SRL
Tel: 0268.33.47.47 / 0722.244.944
vanzari@calpeda.ro | www.calpeda.ro

NMS4

Close Coupled Centrifugal Pumps

Dimensions and weights

4

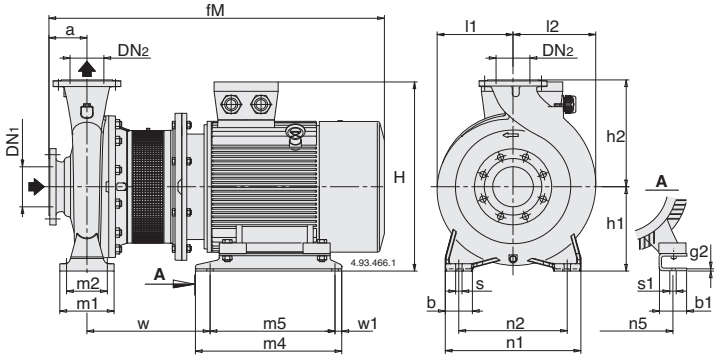

Standard construction

Picture	NMS4	mm																							kg
		DN_1	DN_2	a	fM	h1	h2	H	m1	m2	n1	n2	n5	w1	b	b1	s	s1	l1	l2	w	m4	m5	g2	
4	NMS4 80/315S	100	80	125	968	250	315	536	160	120	400	315	279	25	80	70	18	15	222	234	312	432	382	6	
	NMS4 80/400C/B	125	80	125	973	280	355	566	160	120	435	355	279	25	80	70	18	15	268	269	318	520	435	6	339
	NMS4 80/400B/B	125	80	125	1003	280	355	566	160	120	435	355	279	25	80	70	18	15	268	269	318	520	435	6	355
	NMS4 80/400A/B	125	80	125	1051	280	355	595	160	120	435	355	318	25	80	83	18	19	268	269	334	540	455	6	413
	NMS4 80/400S	125	80	125	1118	280	355	618	160	120	435	355	356	55	80	103	18	19	268	269	380	540	460	8	490
	NMS4 100/315A/A	125	100	140	983	250	315	536	160	120	400	315	279	25	80	70	18	15	230	250	312	432	382	6	308
	NMS4 100/400C/A	125	100	140	1018	280	355	566	200	150	500	400	279	25	100	70	22	15	268	280	318	520	435	6	366
	NMS4 100/400B/A	125	100	140	1066	280	355	595	200	150	500	400	318	25	100	83	22	19	268	280	334	540	455	6	419
	NMS4 100/400A/A	125	100	140	1138	280	355	618	200	150	500	400	356	55	100	103	22	19	268	280	385	540	460	8	506
	NMS4 125/315C/A	150	125	140	988	280	355	566	200	150	500	400	279	25	100	70	22	15	247	278	318	520	435	6	331
	NMS4 125/315B/A	150	125	140	1018	280	355	566	200	150	500	400	279	25	100	70	22	15	247	278	318	520	435	6	350
	NMS4 125/315A/A	150	125	140	1066	280	355	595	200	150	500	400	318	25	100	83	22	19	247	278	334	540	455	6	409
	NMS4 125/400C/A	150	125	140	1138	315	400	653	200	150	500	400	356	25	100	103	22	19	280	305	410	540	461	8	524
	NMS4 125/400B/A	150	125	140	1198	315	400	653	200	150	500	400	356	25	100	103	22	19	280	305	410	540	461	8	574
	NMS4 125/400A/A	150	125	140	1237	315	400	725	200	150	500	400	406	25	100	100	22	24	280	305	454	540	461	8	665
	NMS4 150/315D/A	200	150	160	1008	280	400	566	200	150	550	450	279	25	100	70	22	15	260	298	318	520	435	6	349
	NMS4 150/315C/A	200	150	160	1038	280	400	566	200	150	550	450	279	25	100	70	22	15	260	298	318	520	435	6	374
	NMS4 150/315B/A	200	150	160	1086	280	400	595	200	150	550	450	318	25	100	83	22	19	260	298	334	540	455	6	421
	NMS4 150/315A/A	200	150	160	1158	280	400	618	200	150	550	450	356	55	100	103	22	19	260	298	385	540	460	8	501
	NMS4 150/400C/A	200	150	160	1218	315	450	653	200	150	550	450	356	25	100	103	22	19	295	328	410	540	461	8	594
	NMS4 150/400B/A	200	150	160	1257	315	450	725	200	150	550	450	406	25	100	100	22	24	295	328	454	540	461	8	681
	NMS4 150/400A/A	200	150	160	1330	315	450	748	200	150	550	450	457	45	100	100	22	24	295	328	482	625	535	6	845

Flanges EN 1092-2

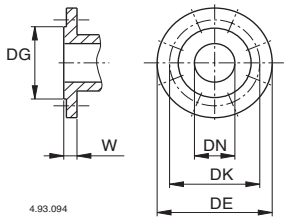

mm						
DN	DG	DK	DE	Holes		W
				N°	Ø	
32	76	100	140	4	19	18
40	84	110	150	4	19	18
50	99	125	165	4	19	20
65	118	145	185	4	19	20
80	132	160	200	8	19	22
100	156	180	220	8	19	24
125	184	210	250	8	19	24
150	211	240	285	8	23	26
200	266	295	340	8	23	30

CALPEDA ROMANIA - INFINITY PUMPS SRL
Tel: 0268.33.47.47 / 0722.244.944
vanzari@calpeda.ro | www.calpeda.ro

B-NM4

Close Coupled Centrifugal Pumps

Dimensions and weights

1

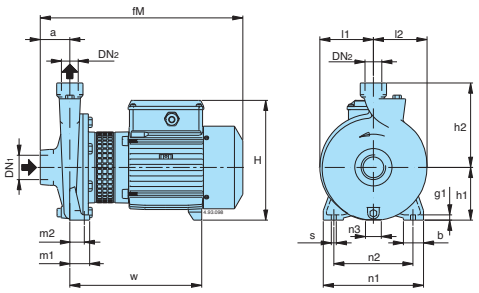

Bronze construction **B-NM4**

Picture	B-NM4	DN1	DN2	mm																kg
		ISO 228		a	fM	h1	h2	H	m1	m2	n1	n2	n3	b	s	l1	l2	w	g	
1	B-NM4 25/160AE-BE	G 1½	G 1	56	380	100	160	228	37,5	27,5	190	150	30	38	9,5	102	102	250	10	19-19
	B-NM4 25/200B/A-C/A			63	400	125	180	253	45	32,5	245	200	49	45	11,5	125	125	250	11	25-23
	B-NM4 25/200A/C			63	440	125	180	253	45	32,5	245	200	49	45	11,5	125	125	250	11	29

2

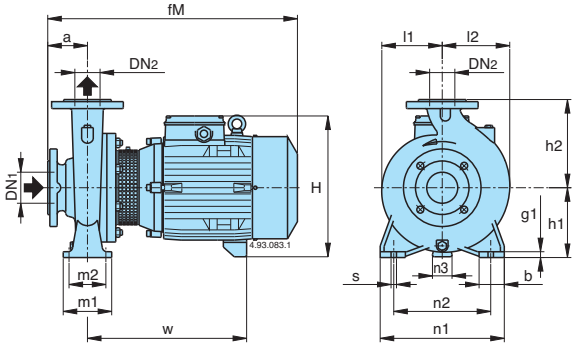

3

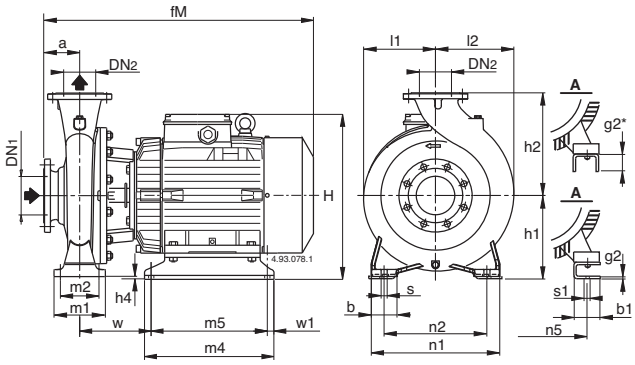

Bronze construction **B-NM4**

Picture	B-NM4	mm																									kg
		DN1	DN2	a	fM	h1	h2	H	h4	m1	m2	n1	n2	n3	n5	w1	b	b1	s	s1	l1	l2	w	m4	m5	g1	g2	
2	B-NM4 32/16A-B	50	32	80	410	132	160	260	-	100	70	240	190	47	-	-	50	-	14	-	120	120	255	-	-	12	-	38-38
	B-NM4 32/20B B-NM4 32/20A/A	50	32	80	410 450	160	180	288	-	100	70	240	190	62	-	-	50	-	14	-	140	140	255	-	-	12	-	41 45
	B-NM4 40/16B-C B-NM4 40/16A/B	65	40	80	410 450	132	160	260	-	100	70	240	190	47	-	-	50	-	14	-	121	121	255	-	-	10	-	36,6-34,7 43
	B-NM4 40/20A/B-B/B	65	40	100	495	160	180	298	-	100	70	265	212	62	-	-	50	-	14	-	142	142	295	-	-	12	-	55-55
3	B-NM4 4025/C/C B-NM4 4025/A/B-B/C	65	40	100	535 560	190	225	318 350	10	125	95	320	250	- -	140 190	15	65	54 60	14	10 12	175	175	156 125	205 280	175 250	-	6	73 89-73
2	B-NM4 50/16A/B-B/B	65	50	100	495	160	180	298	-	100	70	265	212	62	-	-	50	-	14	-	126	140	295	-	-	12	-	55-55
3	B-NM4 5025/C/C-D/B B-NM4 5025/A/B-B/B	65	50	100	560	190	225	350	10	125	95	320	250	-	190	15	65	60	14	12	175	175	125	280	250	-	6	79,5 105-92
2	B-NM4 65/16A/C-B/C-C/C B-NM4 65/16S/A	80	65	100	495 528	160	200	306 320	-	125	95	280	212	62 60	-	-	65	-	14	-	140	161	300 279	-	-	12	-	60-57-66 69,8
	B-NM4 65/20A/A-B/A	80	65	100	528	180	225	340	-	125	95	320	250	60	-	-	65	-	14	-	159	179	279	-	-	12	-	-
	B-NM4 65/25B/B B-NM4 65/25A/C	80	65	100	540 645	200	250	360 385	-	160	120	360	280	60	-	-	80	-	18	-	179	195	345 405	-	-	15	-	109 128
	B-NM4 65/31C/B-B/B B-NM4 65/31A/B	80	65	125	670 720	225	280	410	-	160	120	400	315	75	-	-	80	-	18	-	220	220	415 465	-	-	20	-	170-.. -
	B-NM4 80/20A-B-C	100	80	125	560	180	250	340	-	125	95	345	280	60	-	-	65	-	14	-	170	194	340	-	-	15	-	97,2-89,7-..
	B-NM4 80/25C/A	100	80	125	565	200	280	360	-	160	120	400	315	60	-	-	80	-	18	-	191	210	335	-	-	20	-	115
	B-NM4 80/31C	100	80	125	720	250	315	435	-	160	120	400	315	90	-	-	80	-	18	-	222	234	465	-	-	17	-	-
	B-NM4 100/20B/A-C/A B-NM4 100/20A/C	125	100	125	565 665	200	280	360 385	-	160	120	360	280	60	-	-	80	-	18	-	180	212	330 400	-	-	20	-	109-103 129

CALPEDA ROMANIA - INFINITY PUMPS SRL
Tel: 0268.33.47.47 / 0722.244.944
vanzari@calpeda.ro | www.calpeda.ro

B-NMS4

Close Coupled Centrifugal Pumps

Dimensions and weights

4

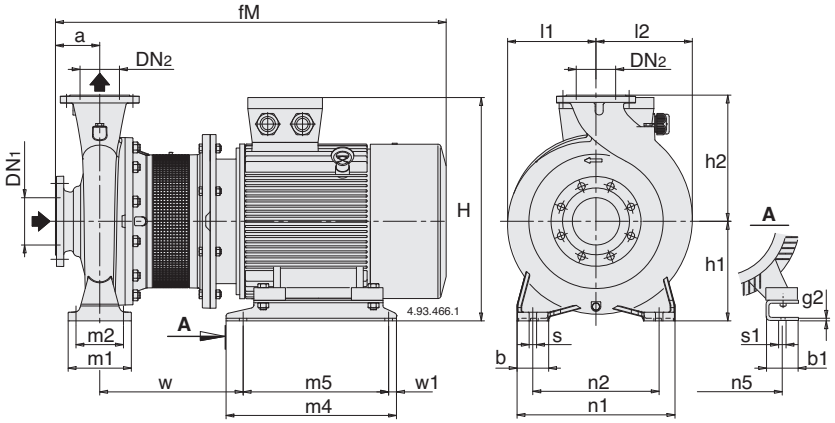

Bronze construction **B-NM4**

Picture	B-NMS4	mm																							kg
		DN1	DN2	a	fM	h1	h2	H	m1	m2	n1	n2	n5	w1	b	b1	s	s1	l1	l2	w	m4	m5	g2	
4	BNMS4 80/250A/A-B/A	100	80	125	807	200	280	387	160	120	400	315	216	20	80	69	18	12	191	210	322	298	258	6	181-171
	BNMS4 80/315B/B	100	80	125	948	250	315	457	160	120	400	315	254	20	80	60	18	15	222	234	271	435	395	6	
	BNMS4 80/315A/B	100	80	125	948	250	315	457	160	120	400	315	254	20	80	60	18	15	222	234	271	435	395	6	
	BNMS4 80/315S	100	80	125	968	250	315	536	160	120	400	315	279	25	80	70	18	15	222	234	312	432	382	6	
	BNMS4 80/400C/B	125	80	125	973	280	355	566	160	120	435	355	279	25	80	70	18	15	268	269	318	520	435	6	
	BNMS4 80/400B/B	125	80	125	1003	280	355	566	160	120	435	355	279	25	80	70	18	15	268	269	318	520	435	6	
	BNMS4 80/400A/B	125	80	125	1051	280	355	595	160	120	435	355	318	25	80	83	18	19	268	269	334	540	455	6	
	BNMS4 80/400S	125	80	125	1118	280	355	618	160	120	435	355	356	55	80	103	18	19	268	269	380	540	460	8	
	BNMS4 100/250B/A	125	100	140	822	225	280	412	160	120	400	315	216	20	80	69	18	12	205	233	322	298	258	6	192
	BNMS4 100/250A/A	125	100	140	872	225	280	412	160	120	400	315	216	20	80	69	18	12	205	233	322	298	258	6	206
	BNMS4 100/315C/A	125	100	140	966	250	315	457	160	120	400	315	254	20	80	60	18	15	230	250	274	435	395	6	284
	BNMS4 100/315B/A	125	100	140	966	250	315	457	160	120	400	315	254	20	80	60	18	15	230	250	274	435	395	6	300
	BNMS4 100/315A/A	125	100	140	983	250	315	536	160	120	400	315	279	25	80	70	18	15	230	250	312	432	382	6	
	BNMS4 100/400C/A	125	100	140	1018	280	355	566	200	150	500	400	279	25	100	70	22	15	268	280	318	520	435	6	
	BNMS4 100/400B/A	125	100	140	1066	280	355	595	200	150	500	400	318	25	100	83	22	19	268	280	334	540	455	6	
	BNMS4 100/400A/A	125	100	140	1138	280	355	618	200	150	500	400	356	55	100	103	22	19	268	280	385	540	460	8	
	BNMS4 125/250D/A-E/A	150	125	140	822	250	355	437	160	120	400	315	216	20	80	69	18	12	235	268	322	298	258	6	
	BNMS4 125/250C/A	150	125	140	872	250	355	437	160	120	400	315	216	20	80	69	18	12	235	268	322	298	258	6	
	BNMS4 125/250B/A	150	125	140	951	250	355	457	160	120	400	315	254	20	80	60	18	15	235	268	259	435	395	6	265
	BNMS4 125/250A/A	150	125	140	951	250	355	457	160	120	400	315	254	20	80	60	18	15	235	268	259	435	395	6	273
	BNMS4 125/315C/A	150	125	140	988	280	355	566	200	150	500	400	279	25	100	70	22	15	247	278	318	520	435	6	383
	BNMS4 125/315B/A	150	125	140	1018	280	355	566	200	150	500	400	279	25	100	70	22	15	247	278	318	520	435	6	395
	BNMS4 125/315A/A	150	125	140	1066	280	355	595	200	150	500	400	318	25	100	83	22	19	247	278	334	540	455	6	
	BNMS4 125/400C/A	150	125	140	1138	315	400	653	200	150	500	400	356	25	100	103	22	19	280	305	410	540	461	8	
	BNMS4 125/400B/A	150	125	140	1198	315	400	653	200	150	500	400	356	25	100	103	22	19	280	305	410	540	461	8	
	BNMS4 125/400A/A	150	125	140	1237	315	400	725	200	150	500	400	406	25	100	100	22	24	280	305	454	540	461	8	
	BNMS4 150/315D	200	150	160	1008	280	400	566	200	150	550	450	279	25	100	70	22	15	260	298	318	520	435	6	380
	BNMS4 150/315C/A	200	150	160	1038	280	400	566	200	150	550	450	279	25	100	70	22	15	260	298	318	520	435	6	395
	BNMS4 150/315B/A	200	150	160	1086	280	400	595	200	150	550	450	318	25	100	83	22	19	260	298	334	540	455	6	467
	BNMS4 150/315A/A	200	150	160	1158	280	400	618	200	150	550	450	356	55	100	103	22	19	260	298	385	540	460	8	544
	BNMS4 150/400C/A	200	150	160	1218	315	450	653	200	150	550	450	356	25	100	103	22	19	295	328	410	540	461	8	
	BNMS4 150/400B/A	200	150	160	1257	315	450	725	200	150	550	450	406	25	100	100	22	24	295	328	454	540	461	8	
	BNMS4 150/400A/A	200	150	160	1330	315	450	748	200	150	550	450	457	45	100	100	22	24	295	328	482	625	535	6	

CALPEDA ROMANIA - INFINITY PUMPS SRL
Tel: 0268.33.47.47 / 0722.244.944
vanzari@calpeda.ro | www.calpeda.ro

Features

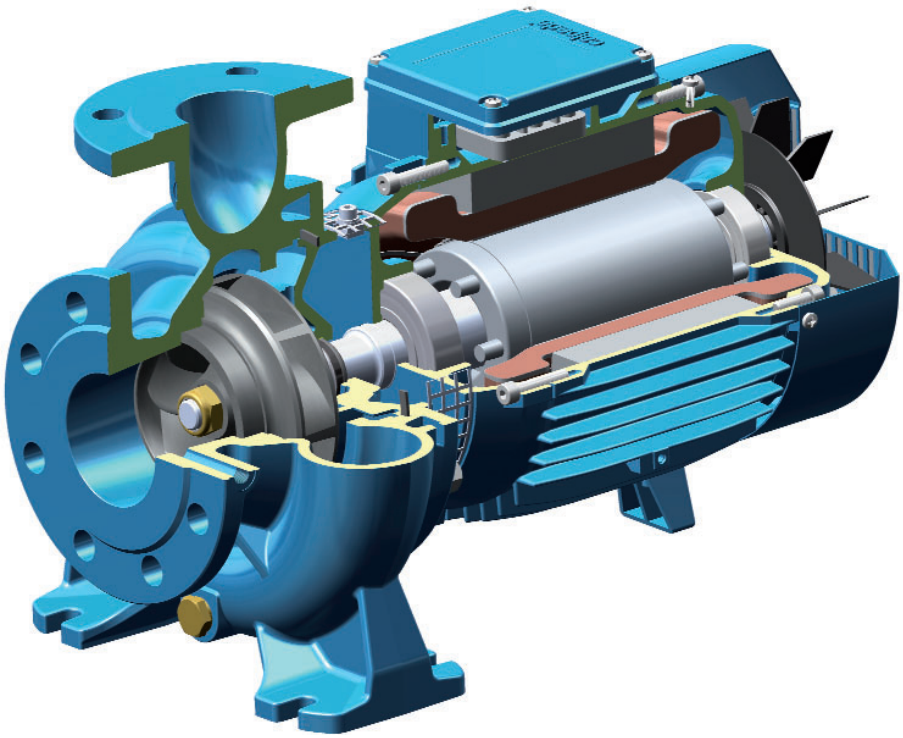

Cutting edge hydraulics
The geometry of the impeller and the pump casing are optimized to achieve maximum efficiency and the best suction capability.

Flexible
The option to choose between cast iron and bronze materias for the hydraulic parts in contact with the pumped liquid allows NM4 series pumps to be selected for use with different types of liquids.

Compact Design
The compact design allows for easy installtion even in confined spaces.

Exclusive design
An innovative, patented guard prevents contact with rotating parts, proving protection to the end user whilst allowing for inspection of the mechanical seal.

Reliable
The bearing and shaft are designed to ensure the reduction of the stress, providing high reliability under all operating conditions.

CALPEDA ROMANIA - INFINITY PUMPS SRL
Tel: 0268.33.47.47 / 0722.244.944
vanzari@calpeda.ro | www.calpeda.ro

NMS4 Close Coupled Centrifugal Pumps

Features

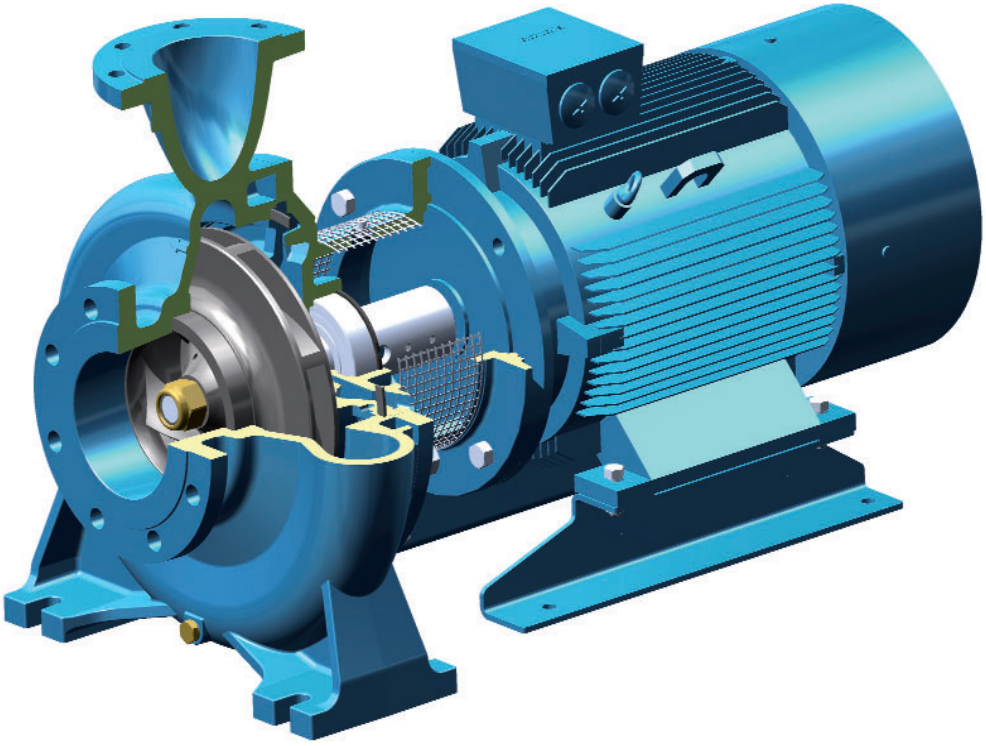

Cutting edge hydraulics
The geometry of the impeller and the pump casing are optimized to achieve maximum efficiency and the best suction capability.

Flexibility
The option to choose between cast iron and bronze materias for the hydraulic parts in contact with the pumped liquid allows NMS4 series pumps to be selected for use with different types of liquids.

New lantern bracket construction
The lantern brackets incorporate a thrust bearing on the hydraulic side which guarantees the elimination of additional loads on the motor bearings. The flange is sized to be used with standard motors B35.

Exclusive design
An innovative, patented guard prevents contact with rotating parts, proving protection to the end user whilst allowing for inspection of the mechanical seal.

Simplified motor maintenance
The presence of the thrust bearing on the hydraulic side makes it easier to remove the motor, facilitating maintenance operations and eliminating the risks of damage to the hydraulic parts.

CALPEDA ROMANIA - INFINITY PUMPS SRL
Tel: 0268.33.47.47 / 0722.244.944
vanzari@calpeda.ro | www.calpeda.ro

N, N4

End-Suction Centrifugal Pumps
standardized EN 733

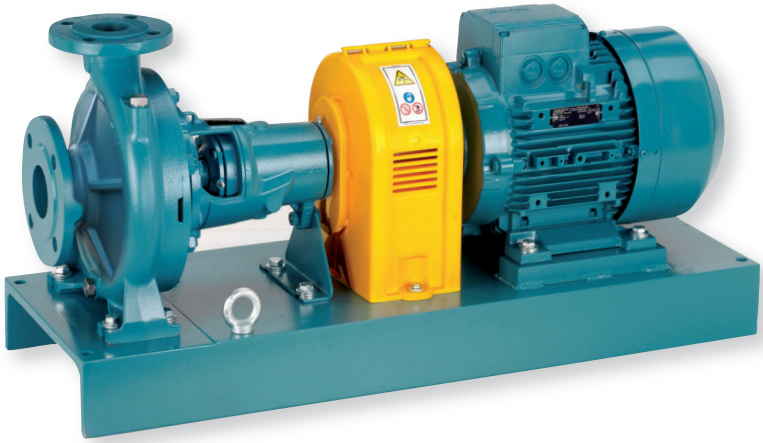

The electropumps N, B-N, N4, B-N4 series comply with the European Regulation no. 547/2012.

Materials

Components	N, N4 Mechanical seal	N, N4 Stuffing box	B-N, B-N4 Mechanical seal
Pump casing Casing cover	Cast iron GJL 200 EN 1561		Bronze G-Cu Sn 10 EN 1982
Impeller	Cast iron GJL 200 EN 1561		Bronze G-Cu Sn 10 EN 1982
	Brass P- Cu Zn 40 Pb 2 UNI 5705 For 32-125, 32-160, 32-200, 40-200		
Shaft	Chrome steel 1.4104 EN 10088 (AISI 430)	Carbon steel C 40 UNI 7845	Cr-Ni-Mo steel 1.4401 EN 10088 (AISI 316)
Shaft sleeve	–	Bronze G-Cu Sn5 Zn5 Pb5 EN 1982 with chromate surface	–
Mechanical seal	Carbon - Ceramic - NBR	–	Carbon - Ceramic - NBR
Counter-flanges	Steel Fe 430B UNI 7070		

Construction

Single-stage end-suction centrifugal pumps, with bearing bracket.
Nominal duty points and main dimensions in accordance with EN 733. Back Pull-Out construction, for simple and quick dismantling and reassembly.

N, N4: version with pump casing and lantern bracket in cast iron.
B-N, B-N4: version with pump casing and lantern bracket in bronze.
(the pumps are supplied fully painted).

Rated speed of rotation (50 Hz): **N** ≈ 2900 rpm.
N4 ≈ 1450 rpm.

Connections: PN 10 flanges EN 1092-2.
Counter-flanges (on request)

Sizes	Flanges
from 32-160 to 50-250	Screwed flanges PN 16 EN 1092-1
from 65-125 to 150-400	Flanges for welding PN 10 EN 1092-1

Shaft sealing
– Standardized mechanical seal in accordance with ISO 3069.
– Stuffing box seal (on request).

Applications

For clean liquids, without abrasives, which are non-aggressive for the pump materials (contents of solids up to 0.2%).
For water supply.
For heating, air conditioning, cooling and circulation plants.
For civil and industrial applications and for agriculture.
For fire fighting applications.
For irrigation.

Operating conditions

Liquid temperature from -10 °C to +90 °C.
Ambient temperature up to 40 °C.
Total suction lift up to 7 m.
Maximum permissible working pressure up to 10 bar (16 bar for N,N4 40-160,200; N,N4 50-125,160; N,N4 65-125,160,200,250; N,N4 80-160,315,400).
Maximum permissible rotation speed: see table on page 82.

Pump-Motor unit

N,N4 pump connected to a standard electric motor in B3 construction form (EN 60072-1), by means of a baseplate, driven by a flexible coupling and with coupling protection.
Three-phase 400 V , 50 Hz
Classification scheme IE3 for three-phase motors from 0,75 kW.
IP 55 protection.
Motor suitable for operation with frequency converter.

Special features on request

- Special mechanical seal.
- Chrome-nickel steel AISI 316 pump-shaft.
- Higher or lower liquid or ambient temperatures.
- Other motor protection.
- Motor for other voltage.
- Frequency 60 Hz (as per 60 Hz data sheet).

CALPEDA ROMANIA - INFINITY PUMPS SRL
Tel: 0268.33.47.47 / 0722.244.944
vanzari@calpeda.ro | www.calpeda.ro

N End-Suction Centrifugal Pumps
standardized EN 733

calpeda®

Coverage chart n ≈ 2900 rpm

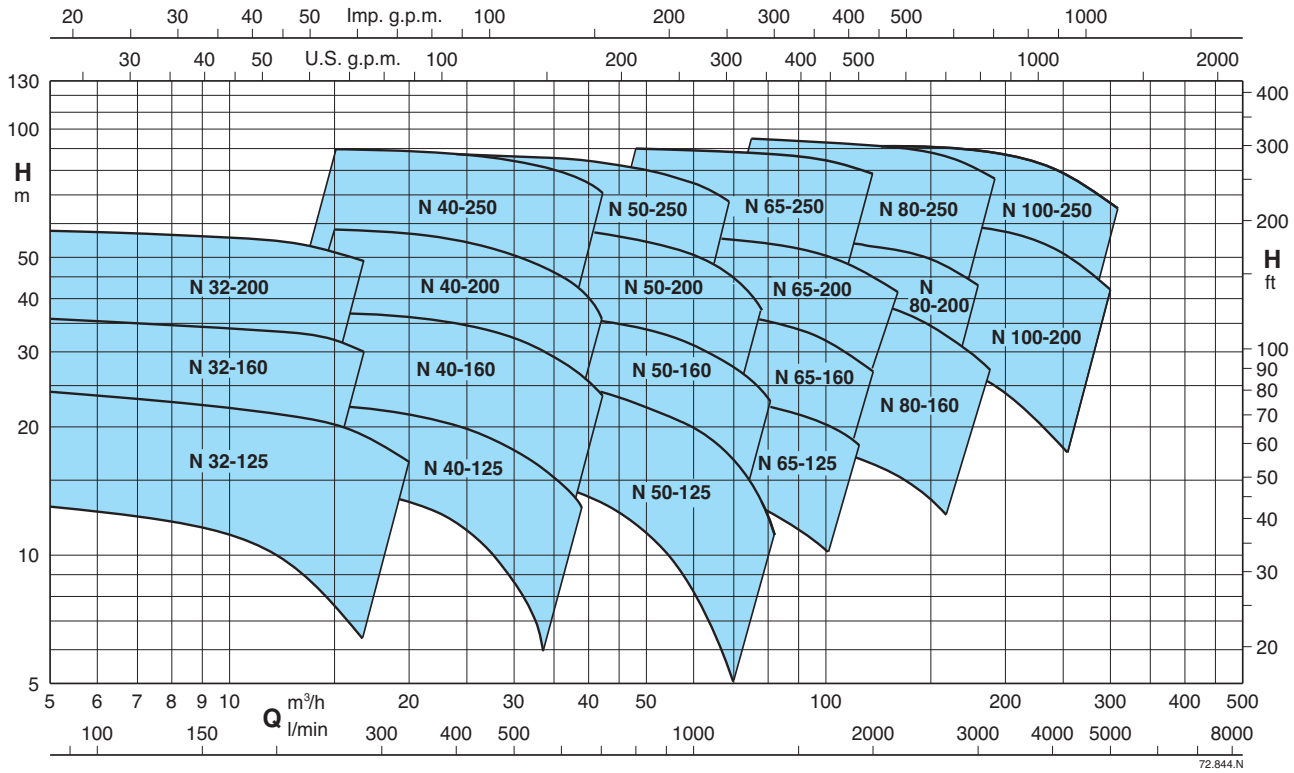

Tolerances according to UNI EN ISO 9906:2012

Performance n ≈ 2900 rpm

PUMP	PUMP	MOTOR	P2 kW	Q m³/h	6,6	7,5	8,4	9,6	10,8	12	13,2	15	16,8	18,9	21	24	27	**30**	33	37,8	39	42	45	48
				Q l/min	110	125	140	160	180	200	220	250	280	315	350	400	450	**500**	550	630	650	700	750	800
B-N 32-125F/A	N 32-125F/A	71 M2	0,55	H m	12,5	12,5	12	11,5	11	10,5	9,5	8	6											
				P3 kW	0,4	0,43	0,46	0,48	0,5	0,52	0,54	0,55	0,56											
B-N 32-125D/A	N 32-125D/A	80 M2	0,75	H m	18	18	17,5	17	16,5	16	15,5	14	12,5	11	8,5									
		80 M2	1,1	P3 kW	0,63	0,67	0,7	0,75	0,79	0,83	0,86	0,9	0,93	0,95	0,97									
B-N 32-125A/A	N 32-125A/A	80 M2	1,1	H m	23	23	22,5	22	21,5	21	20,5	19,5	18	16	14	10								
		90 S2	1,5	P3 kW	0,83	0,87	0,91	0,96	1,01	1,06	1,1	1,19	1,26	1,31	1,35	1,38								
B-N 32-125S/A	N 32-125S/A	90 S2	1,5	H m	23,5	23,5	23	22,5	22	21,5	21	20,5	19	18,5	16,5	13								
				P3 kW	0,86	0,9	0,94	1	1,06	1,12	1,17	1,25	1,3	1,36	1,42	1,49								
B-N 32-160B/A	N 32-160B/A	90 S2	1,5	H m	29,5	29,5	29	28,5	27,5	27	26	25*	22,5*	20*	17,5*	12,5*								
		90 L2	2,2	P3 kW	1,1	1,17	1,23	1,30	1,37	1,43	1,48	1,55	1,63	1,7	1,75	1,79								
B-N 32-160A/A	N 32-160A/A	90 L2	2,2	H m	35,5	35,5	35	34,5	34	33,5	33	32*	30*	28*	25*	21*	15*							
		100 L2	3	P3 kW	1,56	1,64	1,71	1,81	1,9	1,98	2,05	2,16	2,24	2,33	2,4	2,47	2,5							
B-N 32-200D/A	N 32-200D/A	90 L2	2,2	H m	37,5	37	36	35	34	33	32	30	27	22										
		100 L2	3	P3 kW	1,92	2	2,06	2,17	2,24	2,3	2,35	2,4	2,45	2,5										
B-N 32-200C/A	N 32-200C/A	100 L2	3	H m	44,5	44	43,5	43	42	41	40	38,5	36	32										
				P3 kW	2,17	2,28	2,36	2,5	2,63	2,74	2,83	2,97	3,1	3,2										
B-N 32-200A/A	N 32-200A/A	112 M2	4	H m	57	56,5	56	55,5	54,5	53,5	52,5	51	49	46										
		132 S2	5,5	P3 kW	2,9	3,1	3,18	3,35	3,51	3,67	3,8	4	4,2	4,4										
B-N 40-125F/A	N 40-125F/A	80 M2	1,1	H m								14	13,5	13	12	11	9,5	8	6					
				P3 kW								0,96	1,00	1,04	1,07	1,10	1,13	1,13	1,13					
B-N 40-125C/A	N 40-125C/A	90 S2	1,5	H m								17,5	17	16,5	16	15	13,5	12	10,5	7,5	6,5			
				P3 kW								1,21	1,26	1,32	1,38	1,44	1,49	1,53	1,56	1,57	1,57			
B-N 40-125A/A	N 40-125A/A	90 L2	2,2	H m								22	22	21,5	21	20	19	18	16,5	14	13	11,5		
				P3 kW								1,50	1,57	1,65	1,72	1,82	1,91	1,98	2,04	2,10	2,11	2,13		
B-N 40-160C/A	N 40-160C/A	90 L2	2,2	H m								23	22,5	22	21,5	20	18,5	16,5	14,5	11	10			
				P3 kW								1,55	1,63	1,72	1,80	1,90	1,99	2,06	2,12	2,17	2,17			
B-N 40-160B/A	N 40-160B/A	100 L2	3	H m								29	28,8	28	27,5	26,5	25	23,5	21,5	18	17	14		
				P3 kW								2,08	2,18	2,30	2,41	2,55	2,67	2,78	2,87	2,97	2,99	3,02		
B-N 40-160A/A	N 40-160A/A	112 M2	4	H m								37	36,5	36,5	36	35	33,5	32	30,5	27	26	23,5	20	17
		132 S2	5,5	P3 kW								2,70	2,84	3,01	3,18	3,35	3,53	3,72	3,84	4,01	4,05	4,12	4,20	4,22
B-N 40-200D/A	N 40-200D/A	112 M2	4	H m								39	38	37	35,5	33,5	30,5	27	22,5	14				
		132 S2	5,5	P3 kW								3,20	3,35	3,51	3,66	3,86	4,03	4,18	4,30	4,43				
B-N 40-200C/A	N 40-200C/A	112 M2	4	H m								41,5	40,5	39,5	38	36	33,5							
		132 S2	5,5	P3 kW								3,44	3,59	3,78	3,95	4,15	4,32							
B-N 40-200B/A	N 40-200B/A	132 S2	5,5	H m								50	49,5	48,5	47,5	45,5	43,5	41,5	37,5	30,5				
		132 S2	7,5	P3 kW								3,96	4,18	4,41	4,64	4,92	5,17	5,39	5,60	5,87				
B-N 40-200AR/A	N 40-200AR/A	132 S2	5,5	H m								55	54,5	54	53	51	49							
		132 S2	7,5	P3 kW								4,50	4,70	5,07	5,30	5,65	5,95							
B-N 40-200A/A	N 40-200A/A	132 S2	7,5	H m								57,5	57	56,5	55,5	54,5	52,5	50,5	48	42,5	40,5	35		
				P3 kW								4,78	5,04	5,34	5,63	6,03	6,40	6,70	7,01	7,34	7,43	7,62		
B-N 40-250C/A	N 40-250C/A	160 M2	11	H m								61	61	60,5	59,5	58,5	56,5	53,5	49,5	41,5	40	33,5		
				P3 kW								5,86	6,16	6,49	6,82	7,28	7,72	8,07	8,48	9,02	9,15	9,35		
B-N 40-250B/A	N 40-250B/A	160 M2	11	H m								69,5	69,5	69	68,5	67	65,5	63,5	60,5	53,5	51	45		
				P3 kW								6,87	7,19	7,56	7,91	8,47	8,91	9,35	9,75	10,40	10,54	10,93		
B-N 40-250A/A	N 40-250A/A	160 M2	15	H m								90	90	89,5	89	88,5	87	85	83	77,5	76	70,5		
				P3 kW								9,31	9,73	10,21	10,68	11,34	11,98	12,60	13,19	14,00	14,21	14,65		

N Standard construction.
B-N Bronze construction.

P_2 Rated motor power output. P_3 Pump power input. **H** Total head in m. * Maximum suction lift 1-2 m.

CALPEDA ROMANIA - INFINITY PUMPS SRL
Tel: 0268.33.47.47 / 0722.244.944
vanzari@calpeda.ro | www.calpeda.ro

N End-Suction Centrifugal Pumps
standardized EN 733

Performance n ≈ 2900 rpm

PUMP B-N	PUMP N	MOTOR	P2 kW	Q m³/h	24	27	**30**	33	37,8	42	48	54	60	66	69	72	75	78	81	84	96
				Q l/min	400	450	**500**	550	630	700	800	900	1000	1100	1150	1200	1250	1300	1350	1400	1600
B-N 50-125F/A	N 50-125F/A	90 L2	2,2	H m / P3 kW			15,5 / 1,87	15 / 1,93	14 / 2,02	13,5 / 2,09	12 / 2,14	10 / 2,18	8 / 2,14	6 / 2,10							
B-N 50-125D/A	N 50-125D/A	100 L2	3				20 / 2,5	19,5 / 2,58	18,5 / 2,7	18 / 2,81	16,5 / 2,91	14,5 / 2,96	13 / 2,98	10,5 / 2,92	9 / 2,9	8 / 2,87					
B-N 50-125A/A	N 50-125A/A	112 M2	4				24 / 3,11	24 / 3,22	23 / 3,39	22,5 / 3,54	21 / 3,69	19,5 / 3,78	17,5 / 3,85	15 / 3,87	14 / 3,86	12,5 / 3,84	11,5 / 3,81	10 / 3,79			
B-N 50-125S/A	N 50-125S/A	112 M2 132 S2	4 5,5				26,5 / 3,38	26 / 3,52	25,5 / 3,71	24,5 / 3,87	23,5 / 4,04	22 / 4,18	20 / 4,25	18 / 4,29	16,5 / 4,29	15,5 / 4,28	14 / 4,26	13 / 4,24	11 / 4,22		
B-N 50-160B/A	N 50-160B/A	132 S2	5,5				31 / 4,30	30,5 / 4,48	29,5 / 4,71	28 / 4,90	26 / 5,11	24 / 5,28	21,5 / 5,35	19 / 5,40	17,5 / 5,40	15,5 / 5,36	13,5 / 5,32	11,5 / 5,30	9,5 / 5,22		
B-N 50-160A/A	N 50-160A/A	132 S2	7,5				38,5 / 5,44	38 / 5,67	37,5 / 6,02	36,5 / 6,31	34,5 / 6,67	32,5 / 6,95	30 / 7,18	27 / 7,30	25,5 / 7,34	24 / 7,38	22,5 / 7,41	20,5 / 7,42	19 / 7,46		
B-N 50-200B/A	N 50-200B/A	160 M2	11		48 / 5,81	47,5 / 6,13	47,5 / 6,44	47 / 6,73	45,5 / 7,18	44,5 / 7,55	42,5 / 8,02	40 / 8,43	37 / 8,77	33 / 9,01	30,5 / 9,08	28 / 9,15	25,5 / 9,19	23 / 9,23			
B-N 50-200A/A	N 50-200A/A	160 M2	11		55 / 6,92	55 / 7,29	54,5 / 7,65	54,5 / 7,99	53,5 / 8,56	52 / 8,99	50 / 9,57	48 / 10,05	45 / 10,45	41,5 / 10,75	39,5 / 10,89	37 / 10,98	35 / 11,11	32,5 / 11,15			
B-N 50-200S/A	N 50-200S/A	160 M2	15		60 / 7,56	60 / 7,98	59,5 / 8,39	59,5 / 8,79	58,5 / 9,38	57,5 / 9,82	55,5 / 10,48	53,5 / 11,05	50,5 / 11,54	47 / 11,85	45 / 12,02	43 / 12,20	40,5 / 12,30	37 / 12,40			
B-N 50-250C/A	N 50-250C/A	160 M2	11		55 / 7,28	54,5 / 7,68	54 / 8,06	53 / 8,42	51,5 / 8,98	49,5 / 9,42	46,0 / 9,99	41,5 / 10,42	35,5 / 10,75	28,5 / 10,95	24,5 / 11,08						
B-N 50-250B/A	N 50-250B/A	160 M2	15		69 / 9,62	68,5 / 10,08	68 / 10,58	67,5 / 11,05	66 / 11,68	64 / 12,32	61 / 13,05	57 / 13,77	52,5 / 14,20	46,5 / 14,77	43 / 14,98						
B-N 50-250A/A	N 50-250A/A	160 L2	18,5		80,5 / 11,75	80,5 / 12,33	80 / 12,92	79,5 / 13,56	78,5 / 14,47	77 / 15,20	74,5 / 16,10	71,5 / 16,94	67 / 17,65	61,5 / 18,25	58,5 / 18,55						
B-N 50-250S/A	N 50-250S/A	180 M2	22		88,5 / 12,76	88,5 / 13,46	88 / 14,15	87 / 14,85	86 / 15,93	84 / 16,84	81,5 / 17,92	78,5 / 19,02	75 / 19,91	71 / 20,62	68,5 / 20,96						

PUMP B-N	PUMP N	MOTOR	P2 kW	Q m³/h	24	27	**30**	33	37,8	42	48	54	60	66	75	84	96	**108**	120	132	141
				Q l/min	400	450	**500**	550	630	700	800	900	1000	1100	1250	1400	1600	**1800**	2000	2200	2350
B-N 65-125E/B	N 65-125E/B	112 M2	4	H m / P3 kW					16,5 / 2,86	16,4 / 2,99	16,2 / 3,17	15,9 / 3,34	15,5 / 3,5	15,1 / 3,64	14,3 / 3,81	13,2 / 3,94	11,4 / 4,03	9,2 / 4			
B-N 65-125C/B	N 65-125C/B	132 S2	5,5						21,1 / 3,68	21 / 3,86	20,8 / 4,11	20,6 / 4,35	20,3 / 4,57	19,9 / 4,77	19,1 / 5,02	18,2 / 5,23	16,5 / 5,41	14,4 / 5,5	11,8 / 5,49		
B-N 65-125A/B	N 65-125A/B	132 S2	7,5						25,9 / 4,71	25,8 / 4,92	25,6 / 5,21	25,4 / 5,5	25,1 / 5,77	24,8 / 6,03	24,1 / 6,38	23,3 / 6,69	21,9 / 7,02	20 / 7,25	17,6 / 7,36		
B-N 65-160D/B	N 65-160D/B	132 S2	7,5								24,3 / 5,11	24,1 / 5,44	23,9 / 5,75	23,6 / 6,05	23,1 / 6,45	22,3 / 6,8	20,8 / 7,15	18,8 / 7,4	16,3 / 7,52		
B-N 65-160C/B	N 65-160C/B	160 M2	11								28,1 / 5,89	28 / 6,26	27,8 / 6,61	27,6 / 6,96	27,1 / 7,44	26,3 / 7,87	24,9 / 8,37	23,1 / 8,74	20,7 / 8,98	17,7 / 9,06	
B-N 65-160B/B	N 65-160B/B	160 M2	11								32,6 / 7,04	32,5 / 7,44	32,3 / 7,84	32 / 8,22	31,5 / 8,76	30,8 / 9,25	29,5 / 9,84	27,9 / 10,33	25,7 / 10,7	23,0 / 10,96	
B-N 65-160AR	N 65-160AR	160 M2	15								36,4 / 7,98	36,3 / 8,45	36,2 / 8,91	35,9 / 9,36	35,5 / 9,99	34,8 / 10,57	33,7 / 11,27	32,1 / 11,85	30,0 / 12,33	27,5 / 12,71	
B-N 65-160A/B	N 65-160A/B	160 M2	15								40,5 / 8,91	40,4 / 9,44	40,2 / 9,96	40 / 10,47	39,5 / 11,19	38,8 / 11,85	37,6 / 12,64	36,1 / 13,33	34,2 / 13,92	31,7 / 14,42	
B-N 65-200C/B	N 65-200C/B	160 M2	15								44 / 9,2	43,8 / 9,8	43,5 / 10,4	43,1 / 10,9	42,3 / 11,7	41,2 / 12,3	39,4 / 13,1	37,1 / 13,8	34,4 / 14,3	31,4 / 14,8	28,8 / 15,1
B-N 65-200B/B	N 65-200B/B	160 L2	18,5								50,5 / 10,9	50,4 / 11,5	50,2 / 12,2	49,9 / 12,8	49,2 / 13,7	48,3 / 14,6	46,8 / 15,6	44,8 / 16,4	42,5 / 17,2	39,8 / 17,9	37,5 / 18,3
B-N 65-200A/B	N 65-200A/B	180 M2	22								57 / 13,3	57 / 14,1	57 / 14,9	56,5 / 15,6	56 / 16,7	55,5 / 17,7	54 / 19	52,5 / 20,1	50 / 21,1	47,5 / 22	45,5 / 22,5
B-N 65-250C/B	N 65-250C/B	180 M2	22								61 / 13,5	61 / 14,5	60,5 / 15	60 / 16	58,5 / 17	57 / 18	54,5 / 19	51,5 / 20	47,5 / 21	43 / 21,5	
B-N 65-250B/B	N 65-250B/B	200 L2	30								73,5 / 18,5	73,5 / 19,5	73,5 / 20,5	73,5 / 21,5	73 / 23	71,5 / 24,5	69,5 / 26	66,5 / 27,5	63 / 29	59 / 30,5	
B-N 65-250A/B	N 65-250A/B	200 L2	37								86,5 / 22	86,5 / 23,5	87 / 24,5	86,5 / 26	86 / 27,5	85,5 / 29,5	83,5 / 31,5	81 / 34	78 / 35,5	74,5 / 37	

PUMP B-N	PUMP N	MOTOR	P2 kW	Q m³/h	60	66	75	84	96	**108**	120	132	150	168	180	192	210	240	270	300
				Q l/min	1000	1100	1250	1400	1600	**1800**	2000	2200	2500	2800	3000	3200	3500	4000	4500	5000
B-N 80-160E/B	N 80-160E/B	132 S2	7,5	H m / P3 kW			21,5 / 6,81	20,9 / 6,92	19,9 / 7,05	18,7 / 7,15	17,4 / 7,22	15,9 / 7,26	13,4 / 7,27	10,6 / 7,21						
B-N 80-160D/B	N 80-160D/B	160 M2	11				25,2 / 8	24,5 / 8,22	23,5 / 8,49	22,4 / 8,73	21,1 / 8,93	19,6 / 9,09	17,2 / 9,23	14,4 / 9,23						
B-N 80-160C/B	N 80-160C/B	160 M2	11				28,7 / 9,04	28,2 / 9,35	27,4 / 9,74	26,4 / 10,09	25,1 / 10,39	23,8 / 10,65	21,3 / 10,91	18,5 / 10,99	16,4 / 10,93					
B-N 80-160B/B	N 80-160B/B	160 M2	15				34,8 / 11,37	34,5 / 11,83	33,8 / 12,42	33 / 13	32,1 / 13,53	30,9 / 14,01	28,9 / 14,63	26,4 / 15,07	24,5 / 15,26	22,4 / 15,34				
B-N 80-160A/B	N 80-160A/B	160 L2	18,5				39,9 / 13,25	39,6 / 13,82	39 / 14,58	38,2 / 15,3	37,4 / 15,99	36,4 / 16,62	34,5 / 17,45	32,2 / 18,09	30,3 / 18,4	28,1 / 18,59				
B-N 80-200B/A	N 80-200B/A	180 M2	22				46,5 / 15,7	46 / 16,6	45,5 / 17,7	44,5 / 18,6	43,5 / 19,4	42 / 20,2	39* / 21,3	35,5* / 21,8	32* / 22					
B-N 80-200A/A	N 80-200A/A	200 L2	30				56 / 20	55,5 / 21,1	55 / 22,3	54 / 23,5	53 / 24,7	52 / 25,7	49,5* / 27,2	46* / 28,5	43* / 29,3					
B-N 80-250E/A	N 80-250E/A	180 M2	22				51 / 16,2	50 / 17,1	48,5 / 18,2	46,5 / 19,1	44,5 / 20	42 / 20,6	38* / 21,4	33* / 21,9	29* / 22					
B-N 80-250D/A	N 80-250D/A	200 L2	30				65 / 21,3	64 / 22,3	62,5 / 24	61 / 25,3	59 / 26,5	56,5 / 27,5	53* / 28,6	49* / 29,4	45,5* / 29,8	41* / 30				
B-N 80-250C/A	N 80-250C/A	200 L2	37				73,5 / 24,6	73 / 26	72 / 27,8	70,5 / 29,5	69 / 31	67 / 32,4	63* / 33,8	59* / 35,2	55,5* / 35,7	51,5* / 36,2				
B-N 80-250B/A	N 80-250B/A	225 M2	45				84 / 29	83,5 / 30,7	82,5 / 32,9	81,5 / 35	80 / 36,7	78 / 38,3	74,5* / 40,1	70,5* / 41,8	67* / 43	63* / 44,1				
B-N 80-250A/A	N 80-250A/A	250 M2	55				95 / 33,7	94,5 / 35,6	93,5 / 38,1	92,5 / 40,5	91,5 / 42,7	90 / 44,8	87,5* / 47,4	84* / 50	80,5* / 51,5	76,5* / 53				
B-N 100-200E/A	N 100-200E/A	160 L2	18,5							30 / 14,5	29,5 / 15,1	29 / 15,7	28 / 16,6	27 / 17,2	26 / 17,6	25 / 17,9	23 / 18,3	19* / 18,4		
B-N 100-200D/A	N 100-200D/A	180 M2	22							36 / 17,1	35,5 / 17,8	35 / 18,5	34 / 19,5	33 / 20,2	32 / 20,7	31 / 21,1	29 / 21,6	24,5* / 22	19* / 22	
B-N 100-200C/A	N 100-200C/A	200 L2	30							45 / 22	44,5 / 22,9	44 / 23,8	43,5 / 25,1	42,5 / 26,2	41,5 / 26,9	40,5 / 27,5	39 / 28,3	34,5* / 29,4	29* / 29,8	22° / 30
B-N 100-200B/A	N 100-200B/A	200 L2	37							54 / 27,1	53,5 / 28,3	53 / 29,4	52,5 / 30,9	51,5 / 32,2	50,5 / 33,3	49,5 / 34	48 / 34,9	44* / 36,3	38,5* / 37	32° / 37,2
B-N 100-200A/A	N 100-200A/A	225 M2	45							61,5 / 31	61 / 32,4	60,5 / 33,8	60 / 35,8	59,5 / 37,7	58,5 / 39	58 / 40	56,5 / 41,5	53* / 43,5	48* / 45	42° / 45,5
B-N 100-250B/A	N 100-250B/A	250 M2	55							73,5 / 39	73 / 40,6	72,5 / 42,1	71,5 / 44,3	70 / 46,4	68,5 / 47,8	67 / 48,8	65 / 50,5	61* / 52,9	55,5* / 54,7	48,5° / 55,8
B-N 100-250A/A	N 100-250A/A	280 S2	75							91 / 50	90,5 / 52,5	90 / 55	89,5 / 58,5	88,5 / 61,5	88 / 63,5	87 / 65,5	85 / 68	81* / 71,5	75* / 74,5	67° / 75,5

N Standard construction. P2 Rated motor power output. **H** Total head in m. * Maximum suction lift 1-2 m. ° Minimum positive suction head 1 m.

B-N Bronze construction. P3 Pump power input.

CALPEDA ROMANIA - INFINITY PUMPS SRL
Tel: 0268.33.47.47 / 0722.244.944
vanzari@calpeda.ro | www.calpeda.ro

N4 End-Suction Centrifugal Pumps standardized EN 733

Coverage chart n ≈ 1450 rpm

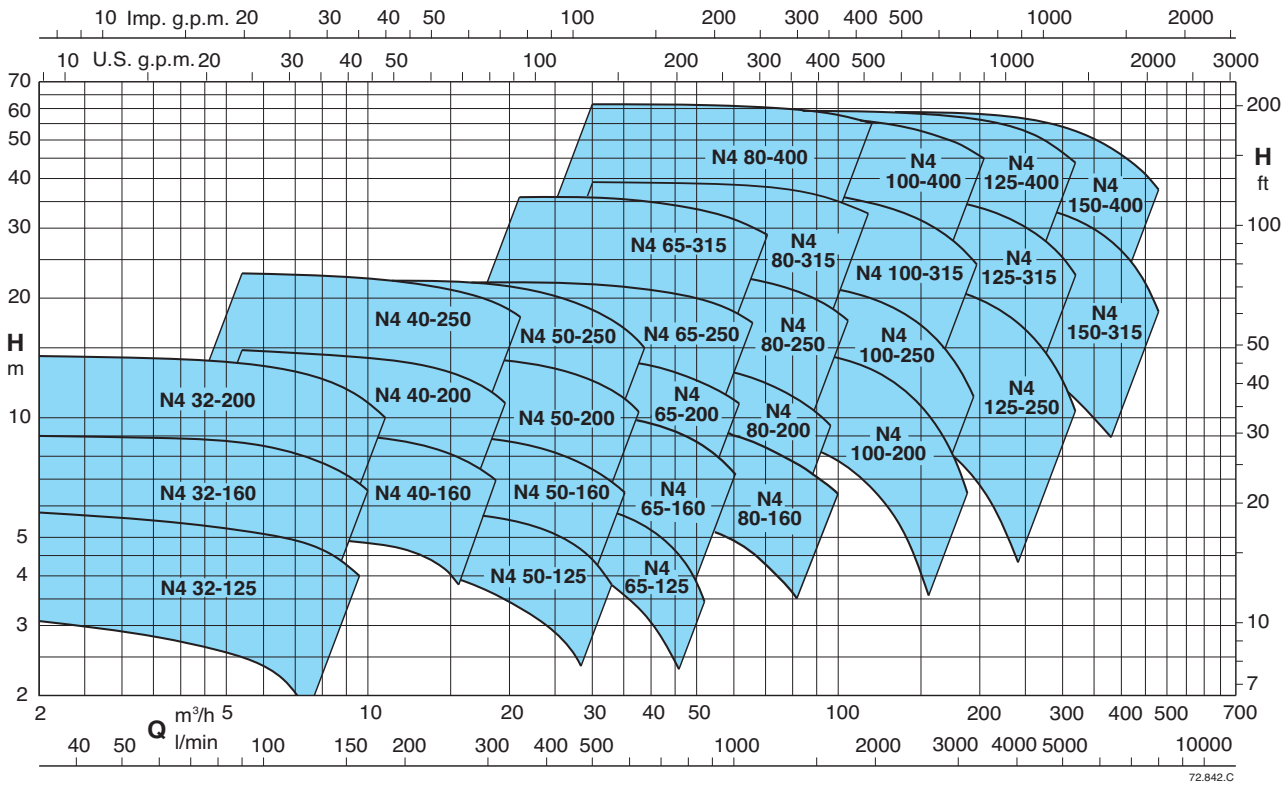

Tolerances according to UNI EN ISO 9906:2012

Performance n ≈ 1450 rpm

PUMP	PUMP	MOTOR	P2 kW	Q m³/h	2,4	3	3,6	4,2	4,8	5,4	**6**	6,6	7,5	8,4	9,6	10,8	12	13,2		
				Q l/min	40	50	60	70	80	90	**100**	110	125	140	160	180	200	220		
B-N4 32-125F/A	N4 32-125F/A	71 M4	0,25	H m	3,6	3,6	3,5	3,5	3,4	3,2	3	2,8	2,4	1,9	1,1					
				P3 kW	0,07	0,075	0,08	0,09	0,095	0,1	0,1	0,105	0,11	0,115	0,115					
B-N4 32-125D/A	N4 32-125D/A	71 M4	0,25	H m	4,7	4,7	4,7	4,7	4,6	4,6	4,5	4,3	4,1	3,8	3,3	2,6				
				P3 kW	0,095	0,075	0,11	0,115	0,125	0,13	0,135	0,145	0,15	0,155	0,165	0,17				
B-N4 32-125A/A	N4 32-125A/A	71 M4	0,25	H m	5,7	5,8	5,8	5,7	5,7	5,7	5,6	5,5	5,4	5,2	4,8	4,3				
				P3 kW	0,12	0,1	0,135	0,145	0,15	0,16	0,165	0,175	0,185	0,195	0,205	0,215				
B-N4 32-160B/A	N4 32-160B/A	71 M4	0,37	H m	7,6	7,5	7,4	7,3	7,2	7,1	6,9	6,7	6,3	5,9	5,2	4,2				
				P3 kW	0,13	0,125	0,15	0,16	0,17	0,18	0,19	0,2	0,21	0,215	0,23	0,235				
B-N4 32-160A/A	N4 32-160A/A	71 M4	0,37	H m	9	8,95	8,9	8,8	8,7	8,6	8,5	8,3	7,9	7,5	6,8	6	5,1			
				P3 kW	0,17	0,18	0,19	0,2	0,21	0,22	0,23	0,24	0,26	0,275	0,29	0,305	0,315			
B-N4 32-200B/A	N4 32-200B/A	80 M4	0,55	H m	12,5	12,4	12,3	12,2	12	11,8	11,6	11,2	10,6	10	8,9	7,6	6,2	4,7		
				P3 kW	0,28	0,3	0,315	0,33	0,345	0,36	0,375	0,39	0,41	0,43	0,455	0,48	0,5	0,515		
B-N4 32-200A/A	N4 32-200A/A	80 M4	0,75	H m	14,3	14,2	14,1	14	13,9	13,7	13,5	13,3	12,9	12,3	11,3	10,2	8,9	7,5		
				P3 kW	0,35	0,375	0,4	0,42	0,44	0,46	0,48	0,5	0,525	0,55	0,585	0,61	0,635	0,655		

PUMP	PUMP	MOTOR	P2 kW	Q m³/h	5,4	**6**	6,6	7,5	8,4	9,6	10,8	12	13,2	15	16,8	18,9	21	**24**	27	30
				Q l/min	90	**100**	110	125	140	160	180	200	220	250	280	315	350	**400**	450	500
B-N4 40-160C/A	N4 40-160C/A	71 M4	0,37	H m	6,1	6	5,9	5,9	5,8	5,6	5,4	5,2	5	4,5	3,9	3,1	2,3			
				P3 kW	0,17	0,18	0,19	0,2	0,21	0,23	0,24	0,25	0,26	0,27	0,28	0,29	0,3			
B-N4 40-160B/A	N4 40-160B/A	80 M4	0,55	H m	7,6	7,6	7,6	7,6	7,6	7,3	7,1	6,9	6,6	6,3	5,7	5	4	2,7		
				P3 kW	0,22	0,23	0,24	0,26	0,27	0,29	0,31	0,32	0,34	0,36	0,38	0,39	0,4	0,41		
B-N4 40-160A/A	N4 40-160A/A	80 M4	0,75	H m	9,6	9,6	9,6	9,6	9,4	9,3	9,1	9	8,8	8,4	7,9	7,2	6,4	5,1	3,5	
				P3 kW	0,28	0,3	0,31	0,33	0,35	0,37	0,4	0,42	0,44	0,47	0,49	0,51	0,53	0,55	0,56	
B-N4 40-200B/A	N4 40-200B/A	90 S4	1,1	H m	13	12,9	12,8	12,7	12,6	12,4	12,2	12	11,5	10,8	10	8,6	7			
				P3 kW	0,51	0,53	0,54	0,57	0,60	0,63	0,66	0,68	0,71	0,75	0,78	0,81	0,83			
B-N4 40-200A/A	N4 40-200A/A	90 S4	1,1	H m	14,8	14,7	14,6	14,5	14,4	14,2	14	13,8	13,6	13	12,2	11,3	10			
				P3 kW	0,59	0,6	0,61	0,64	0,67	0,71	0,74	0,77	0,8	0,85	0,9	0,94	0,97			
B-N4 40-250C/A	N4 40-250C/A	90 L4	1,5	H m	17,4	17,3	17,2	17,2	17	16,8	16,6	16,3	16	15,1	13,8	12,1	10,4	7,2	2,8	
				P3 kW	0,689	0,715	0,74	0,779	0,817	0,865	0,912	0,967	1,018	1,092	1,134	1,178	1,248	1,301	1,348	
B-N4 40-250B/A	N4 40-250B/A	100 LA4	2,2	H m	21,4	21,5	21,4	21,3	21,2	21	20,9	20,8	20,5	20	19,5	18,3	16,4	13,3	10	5
				P3 kW	0,908	0,942	0,99	1,025	1,075	1,140	1,203	1,266	1,327	1,405	1,482	1,567	1,645	1,752	1,815	1,887
B-N4 40-250A/A	N4 40-250A/A	100 LB4	3	H m	22,9	22,8	22,9	22,9	22,8	22,5	22,5	22,2	22	21,8	21,4	20,4	18,9	16	12,6	8
				P3 kW	1,068	1,104	1,15	1,193	1,246	1,316	1,385	1,454	1,521	1,638	1,733	1,817	1,933	2,068	2,168	2,267

N4 Standard construction.
B-N4 Bronze construction.
P2 Rated motor power output.
P3 Pump power input.
H Total head in m.
* Maximum suction lift 1-2 m.

CALPEDA ROMANIA - INFINITY PUMPS SRL
Tel: 0268.33.47.47 / 0722.244.944
vanzari@calpeda.ro | www.calpeda.ro

N4 End-Suction Centrifugal Pumps
standardized EN 733

calpeda®

Performance n ≈ 1450 rpm

PUMP B-N4	PUMP N4	MOTOR	P_2 kW	Q m³/h	10,8	12	13,2	15	16,8	18,9	21	**24**	27	30	33	37,8	42	48		
				Q l/min	180	200	220	250	280	315	350	**400**	450	500	550	630	700	800		
B-N4 50-125F/A	N4 50-125F/A	71 M4	0,37	H m	4,5	4,5	4,4	4,3	4,1	3,8	3,5	2,9	2,2	1,4	0,5					
				P_3 kW	0,26	0,275	0,285	0,3	0,31	0,32	0,325	0,33	0,325	0,315	0,3					
B-N4 50-125D/A	N4 50-125D/A	80 M4	0,55	H m	5,5	5,5	5,4	5,4	5,2	5,1	4,8	4,4	3,8	3,2	2,5					
				P_3 kW	0,32	0,335	0,345	0,365	0,385	0,4	0,415	0,425	0,435	0,43	0,425					
B-N4 50-125A/A	N4 50-125A/A	80 M4	0,75	H m	6,4	6,4	6,3	6,3	6,2	6,1	5,9	5,6	5,2	4,6	4	2,9				
				P_3 kW	0,37	0,39	0,405	0,425	0,45	0,47	0,49	0,51	0,525	0,535	0,535	0,525				
B-N4 50-125S/A	N4 50-125S/A	80 M4	0,75	H m	6,8	6,8	6,8	6,8	6,7	6,6	6,4	6,2	5,8	5,3	4,8	3,8				
				P_3 kW	0,4	0,42	0,435	0,46	0,48	0,505	0,525	0,555	0,57	0,585	0,59	0,59				
B-N4 50-160B/A	N4 50-160B/A	90 S4	1,1	H m	8,2	8,2	8,2	8,1	8	7,8	7,6	7,2	6,7	6,2	5,5	4,4	3,3			
				P_3 kW	0,449	0,469	0,496	0,524	0,555	0,584	0,610	0,643	0,671	0,683	0,692	0,687	0,673			
B-N4 50-160A/A	N4 50-160A/A	90 S4	1,1	H m	9,6	9,6	9,6	9,5	9,5	9,3	9,1	8,8	8,3	7,8	7,2	6,1	4,9	3,1		
				P_3 kW	0,555	0,578	0,600	0,632	0,670	0,705	0,742	0,778	0,811	0,833	0,850	0,862	0,861	0,844		
B-N4 50-200C/A	N4 50-200C/A	90 S4	1,1	H m	11,8	11,8	11,7	11,7	11,5	11,3	10,9	10,4	9,8	9	8,1	6,3	4,7			
				P_3 kW	0,617	0,647	0,682	0,720	0,759	0,801	0,841	0,888	0,927	0,957	0,979	1,005	1,010			
B-N4 50-200B/A	N4 50-200B/A	90 L4	1,5	H m	13,4	13,4	13,4	13,3	13,1	12,9	12,6	12,1	11,5	10,8	9,9	8,2	6,4	3,7		
				P_3 kW	0,772	0,807	0,840	0,889	0,949	0,998	1,051	1,115	1,171	1,213	1,251	1,278	1,299	1,301		
B-N4 50-200A/A	N4 50-200A/A	100 L4	2,2	H m	14,9	14,9	14,9	14,9	14,8	14,6	14,4	14	13,4	12,8	12	10,4	8,6	6		
				P_3 kW	0,883	0,923	0,962	1,019	1,074	1,135	1,194	1,273	1,345	1,409	1,464	1,535	1,576	1,596		
B-N4 50-250D/A	N4 50-250D/A	100 L4	2,2	H m	14,5	14,4	14,3	14	13,7	13,4	13	12,2	11,2	9,7	8,1	5,4	2,3			
				P_3 kW	0,843	0,886	0,929	0,990	1,049	1,098	1,160	1,230	1,300	1,364	1,395	1,435	1,468			
B-N4 50-250C/A	N4 50-250C/A	100 L4	2,2	H m	17,8	17,8	17,7	17,5	17,2	16,8	16,4	15,7	14,9	13,8	12,4	9,7	6,8			
				P_3 kW	1,091	1,140	1,188	1,258	1,324	1,397	1,465	1,554	1,633	1,700	1,755	1,818	1,844			
B-N4 50-250B/A	N4 50-250B/A	100 L4	3	H m	20,7	20,7	20,7	20,6	20,4	20	19,5	18,9	18,2	17,1	15,9	13,2	10,6	5,8		
				P_3 kW	1,374	1,437	1,499	1,591	1,680	1,781	1,878	2,009	2,130	2,241	2,320	2,448	2,510	2,580		
B-N4 50-250A/A	N4 50-250A/A	112 M4	4	H m	22,7	22,7	22,6	22,5	22,4	22,1	21,6	21	20,2	19,4	18,3	16,4	13,6	9		
				P_3 kW	1,493	1,561	1,628	1,728	1,825	1,935	2,042	2,186	2,322	2,445	2,557	2,706	2,804	2,893		

PUMP B-N4	PUMP N4	MOTOR	P_2 kW	Q m³/h	21	**24**	27	30	33	37,8	42	**48**	54	60	66	75	84	96	108	120
				Q l/min	350	**400**	450	500	550	630	700	**800**	900	1000	1100	1250	1400	1600	1800	2000
B-N4 65-125E/B	N4 65-125E/B	80 M4	0,75	H m	4,1	4,1	4	3,9	3,8	3,6	3,3	2,9	2,3							
				P_3 kW	0,38	0,4	0,41	0,44	0,45	0,48	0,49	0,5	0,5							
B-N4 65-125C/B	N4 65-125C/B	80 M4	0,75	H m	5,3	5,2	5,2	5,1	5	4,8	4,6	4,1	3,6	3						
				P_3 kW	0,49	0,51	0,54	0,58	0,6	0,63	0,65	0,69	0,69	0,69						
B-N4 65-125A/B	N4 65-125A/B	90 S4	1,1	H m	6,5	6,4	6,4	6,3	6,2	6	5,8	5,5	5	4,4						
				P_3 kW	0,61	0,65	0,69	0,73	0,75	0,8	0,84	0,91	0,91	0,93						
B-N4 65-160C/B	N4 65-160C/B	90 S4	1,1	H m	6,1	6,1	6	6	5,9	5,8	5,6	5,3	4,8	4,2						
				P_3 kW	0,57	0,61	0,65	0,69	0,72	0,78	0,83	0,88	0,92	0,93						
B-N4 65-160B/B	N4 65-160B/B	90 S4	1,1	H m	7,2	7,1	7,1	7	7	6,8	6,6	6,3	5,8	5,2	4,5					
				P_3 kW	0,68	0,73	0,77	0,82	0,86	0,92	0,97	1,03	1,07	1,11	1,12					
B-N4 65-160A/B	N4 65-160A/B	90 L4	1,5	H m	8,8	8,8	8,7	8,7	8,6	8,5	8,3	8	7,6	7,1	6,4	5,2				
				P_3 kW	0,87	0,93	0,98	1,04	1,09	1,17	1,24	1,32	1,39	1,44	1,48	1,51				
B-N4 65-160S	N4 65-160S	100 L4	2,2	H m	10,2	10,2	10,1	10,1	10	9,9	9,7	9,4	9,1	8,6	8	7	5,7			
				P_3 kW	1,09	1,15	1,22	1,28	1,34	1,44	1,52	1,62	1,71	1,79	1,86	1,93	1,96			
B-N4 65-200B/B	N4 65-200B/B	100 L4	2,2	H m	11,7	11,7	11,6	11,6	11,5	11,3	11	10,6	10,1	9,5	8,7	7,4	5,8	3,3		
				P_3 kW	1,25	1,3	1,35	1,45	1,5	1,6	1,7	1,8	1,9	2	2,05	2,15	2,2	2,15		
B-N4 65-200A/B	N4 65-200A/B	100 L4	3	H m	14,2	14,2	14,2	14,1	14,1	13,9	13,7	13,4	13	12,5	11,8	10,7	9,3	7		
				P_3 kW	1,55	1,65	1,75	1,85	1,95	2,1	2,2	2,35	2,5	2,65	2,75	2,9	3	3,05		
B-N4 65-250B/B	N4 65-250B/B	112 M4	4	H m	17,9	18	18	18	18	17,8	17,5	17	16,3	15,4	14,4	12,5	10,4	7		
				P_3 kW	1,95	2,05	2,2	2,3	2,45	2,6	2,75	2,95	3,15	3,3	3,45	3,65	3,75	3,85		
B-N4 65-250A/B	N4 65-250A/B	132 S4	5,5	H m	22,2	22,3	22,4	22,4	22,4	22,2	22	21,6	21	20,2	19,3	17,6	15,7	12,6		
				P_3 kW	2,55	2,7	2,85	3	3,15	3,4	3,6	3,85	4,1	4,35	4,6	4,85	5,1	5,3		
B-N4 65-315C/A	N4 65-315C/A	132 S4	5,5	H m	25,8	25,7	25,5	25,3	25	24,4	23,8	22,8	21,5	20	18,2	15	11			
				P_3 kW	3,12	3,31	3,49	3,67	3,83	4,05	4,25	4,5	4,75	4,96	5,12	5,3	5,44			
B-N4 65-315B/A	N4 65-315B/A	132 M4	7,5	H m	31	31	30,9	30,8	30,6	30,2	29,7	28,8	27,8	26,5	25	22,2	18,6			
				P_3 kW	3,97	4,23	4,45	4,65	4,85	5,15	5,4	5,75	6,1	6,4	6,65	7	7,2			
B-N4 65-315A/A	N4 65-315A/A	160 M4	11	H m	35,9	35,9	35,8	35,7	35,5	35,1	34,6	33,8	32,8	31,6	30,2	27,8	25			
				P_3 kW	4,8	5,1	5,4	5,6	5,8	6,15	6,5	6,9	7,3	7,6	7,9	8,3	8,7			

PUMP B-N4	PUMP N4	MOTOR	P_2 kW	Q m³/h	30	33	37,8	42	**48**	54	60	66	75	84	96	108	**120**	132	150	168	180
				Q l/min	500	550	630	700	**800**	900	1000	1100	1250	1400	1600	1800	**2000**	2200	2500	2800	3000
B-N4 80-160C/B	N4 80-160C/B	90 S4	1,1	H m	6,1	6,1	5,9	5,8	5,5	5,2	4,9	4,6	4	3,3							
				P_3 kW	0,87	0,88	0,9	0,92	0,95	0,98	1	1,02	1,03	1,04							
B-N4 80-160B/B	N4 80-160B/B	90 L4	1,5	H m	7,8	7,7	7,6	7,5	7,3	7	6,8	6,4	5,9	5,2	4,1						
				P_3 kW	1,14	1,16	1,2	1,23	1,27	1,31	1,34	1,37	1,41	1,44	1,46						
B-N4 80-160A/B	N4 80-160A/B	100 L4	2,2	H m	10	10	9,9	9,8	9,7	9,5	9,3	9	8,5	8	7	5,9					
				P_3 kW	1,49	1,53	1,6	1,66	1,74	1,82	1,9	1,97	2,07	2,15	2,22	2,24					
B-N4 80-200C/A	N4 80-200C/A	100 L4	2,2	H m	10,3	10,2	10,1	10	9,8	9,5	9,1	8,6	7,7	6,6	4,6						
				P_3 kW	1,56	1,62	1,7	1,77	1,86	1,93	2	2,06	2,13	2,18	2,2						
B-N4 80-200B/A	N4 80-200B/A	100 L4	3	H m	12,1	12	11,9	11,8	11,7	11,4	11,1	10,6	9,8	9	7,5	5,7					
				P_3 kW	1,8	1,88	2	2,1	2,22	2,33	2,43	2,52	2,62	2,68	2,72	2,72					
B-N4 80-200A/A	N4 80-200A/A	112 M4	4	H m	13,9	13,8	13,7	13,6	13,5	13,3	13	12,6	11,8	11	9,6	7,9	6				
				P_3 kW	2,13	2,22	2,35	2,48	2,65	2,8	2,94	3,05	3,2	3,35	3,44	3,46	3,44				
B-N4 80-250C/A	N4 80-250C/A	112 M4	4	H m	16,9	16,8	16,7	16,6	16,3	15,9	15,4	14,8	13,9	12,7	11,1	9,3	7,2				
				P_3 kW	2,37	2,5	2,65	2,8	3	3,2	3,35	3,49	3,68	3,83	3,97	3,98	3,88				
B-N4 80-250B/A	N4 80-250B/A	132 S4	5,5	H m	20,7	20,6	20,5	20,4	20,3	20	19,6	19,1	18,2	17,1	15,4	13,5	11,4	9*			
				P_3 kW	3,25	3,38	3,58	3,75	4	4,23	4,42	4,6	4,87	5,13	5,35	5,49	5,55	5,45			
B-N4 80-250A/A	N4 80-250A/A	132 M4	7,5	H m	23,7	23,7	23,6	23,5	23,3	23	22,7	22,2	21,5	20,5	19	17,2	15,1	12,7*			
				P_3 kW	3,94	4,1	4,33	4,54	4,83	5,08	5,33	5,58	5,91	6,23	6,54	6,82	6,98	7,05			
B-N4 80-315C/B	N4 80-315C/B	160 M4	11	H m	25,7	25,8	25,8	25,8	25,8	25,6	25,4	25	24,4	23,6	22,2	20,4	18,3	15,9			
				P_3 kW	4,6	4,8	5,1	5,4	5,7	6,1	6,4	6,7	7,2	7,6	8,1	8,5	8,9	9,2			
B-N4 80-315B/B	N4 80-315B/B	160 M4	11	H m	30,3	30,5	30,6	30,7	30,7	30,7	30,5	30,2	29,6	28,8	27,5	25,9	24,1	22			
				P_3 kW	5,3	5,5	5,9	6,2	6,6	7	7,5	7,9	8,5	9	9,7	10,2	10,8	11,2			
B-N4 80-315A/B	N4 80-315A/B	160 L4	15	H m	36,3	36,4	36,5	36,6	36,6	36,5	36,4	36,1	35,6	35	33,9	32,5	30,9	29	25,3		
				P_3 kW	6,7	6,9	7,3	7,7	8,2	8,7	9,2	9,7	10,4	11,1	12	12,7	13,4	14	14,8		
B-N4 80-315S	N4 80-315S	180 M4	18,5	H m	39,1	39,2	39,3	39,4	39,5	39,4	39,3	39,2	38,7	38,1	37,1	35,7	34,1	32,1	28,3	22,5*	
				P_3 kW	7,6	7,8	8,3	8,7	9,2	9,8	10,3	10,8	11,6	12,4	13,4	14,3	15,1	15,8	16,8	17,7	
B-N4 80-400C/B	N4 80-400C/B	180 M4	18,5	H m	42,8	42,8	42,8	42,8	42,7	42,5	42,2	41,8	41	39,8	37,9	35,4	32,4	29,1			
				P_3 kW	8,2	8,5	9	9,4	10,1	10,7	11,3	11,9	12,8	13,7	14,7	15,7	16,6	17,4			
B-N4 80-400B/B	N4 80-400B/B	180 L4	22	H m	48,2	48,2	48,2	48,2	48,1	47,9	47,7	47,3	46,6	45,7	44,1	42,1	39,5	36,3	30,5		
				P_3 kW	9,7	10,1	10,6	11,1	11,7	12,4	13,1	13,8	14,8	15,7	17	18,2	19,4	20,4	21,8		
B-N4 80-400A/B	N4 80-400A/B	200 L4	30	H m	61,4	61,5	61,5	61,6	61,6	61,5	61,3	61,1	60,7	60,1	59	57,6	55,8	53,7	49,5		
				P_3 kW	12,8	13,2	13,9	14,5	15,4	16,3	17,2	18,1	19,5	20,8	22,6	24,3	25,9	27,4	29,4		
B-N4 80-400S	N4 80-400S	225 S4	37	H m	61,4	61,5	61,5	61,6	61,6	61,5	61,3	61,1	60,7	60,1	59	57,6	55,8	53,7	49,5	43,9	39,2*
				P_3 kW	12,8	13,2	13,9	14,5	15,4	16,3	17,2	18,1	19,5	20,8	22,6	24,3	25,9	27,4	29,4	31,3	32,4

N4 Standard construction. P_2 Rated motor power output. **H** Total head in m. * Maximum suction lift 1-2 m.

B-N4 Bronze construction. P_3 Pump power input.

CALPEDA ROMANIA - INFINITY PUMPS SRL
Tel: 0268.33.47.47 / 0722.244.944
vanzari@calpeda.ro | www.calpeda.ro

N4 End-Suction Centrifugal Pumps standardized EN 733

calpeda®

Performance n ≈ 1450 rpm

PUMP B-N4	PUMP N4	MOTOR	P_2 kW	Q m³/h	**48**	54	60	66	75	84	96	108	**120**	132	150	168	180	192	210
				Q l/min	**800**	900	1000	1100	1250	1400	1600	1800	**2000**	2200	2500	2800	3000	3200	3500
B-N4 100-200C/A	N4 100-200C/A	100 L4	3	H m / P_3 kW	9,4 2,1	9,3 2,2	9,2 2,3	9,1 2,4	8,9 2,5	8,5 2,6	8 2,7	7,3 2,8	6,5 2,85	5,6 2,9	4 2,85				
B-N4 100-200B/A	N4 100-200B/A	112 M4	4		12 2,65	11,9 2,8	11,8 2,95	11,7 3,1	11,5 3,3	11,2 3,45	10,7 3,65	10 3,85	9,3 3,95	8,4 4	6,7 3,95	4,5 3,8			
B-N4 100-200A/A	N4 100-200A/A	132 S4	5,5		15,2 3,65	15,2 3,85	15,1 4	15 4,15	14,9 4,4	14,7 4,6	14,3 4,85	13,8 5,1	13,1 5,3	12,2 5,45	10,7 5,55	9 5,65	7,5* 5,65	6* 5,55	
B-N4 100-250B/A	N4 100-250B/A	132 M4	7,5		19,5 4,8	19,5 5	19,4 5,2	19,3 5,4	19 5,75	18,7 6,05	18,2 6,4	17,5 6,7	16,6 7	15,6 7,3	13,8 7,5	11,7 7,5	10 7,45	8,4 7,35	5,5 7,15
B-N4 100-250A/A	N4 100-250A/A	160 M4	11		22,3 5,5	22,3 5,8	22,2 6,05	22,1 6,25	21,9 6,6	21,7 6,95	21,2 7,35	20,5 7,75	19,8 8,1	18,8 8,35	17,1 8,7	15 9	13,4 9,05	11,7 9	8,9 8,9
B-N4 100-315C/A	N4 100-315C/A	160 M4	11		26,9 6,6	26,9 7	26,8 7,35	26,6 7,65	26,2 8,1	25,7 8,5	24,9 9	23,8 9,5	22,7 9,85	21,3 10,2	18,9 10,7	15,9 10,9	13,7 11	11,3* 11	
B-N4 100-315B/A	N4 100-315B/A	160 L4	15		31,5 7,8	31,5 8,25	31,4 8,65	31,3 9	31,2 9,6	30,8 10,2	30,2 10,9	29,3 11,5	28,2 12,1	26,9 12,6	24,6 13,3	21,8 13,9	19,8 14,1	17,6* 14,4	14* 14,4
B-N4 100-315A/A	N4 100-315A/A	180 M4	18,5		36,9 9,7	36,9 10,2	36,8 10,7	36,7 11,2	36,6 11,9	36,4 12,5	36 13,3	35,3 14,1	34,5 14,9	33,4 15,6	31,4 16,6	29 17,4	27,2 17,9	25,3* 18,3	22,2* 18,75
B-N4 100-400C/A	N4 100-400C/A	180 L4	22		41,3 11,1	41,2 11,8	41,1 12,5	41 13,2	40,7 14	40,4 14,8	39,8 16	39 17	38 18	36,5 18,9	34 20	31 21	28,7 21,7	26 22	
B-N4 100-400B/A	N4 100-400B/A	200 L4	30		50,2 15,2	50,1 16	50 16,8	49,9 17,4	49,7 18,4	49,4 19,3	48,8 20,6	48 21,8	47,1 23	46 24,2	44 25,7	41,3 27	39,5 27,8	37 28,5	33,5* 29,4
B-N4 100-400A/A	N4 100-400A/A	225 S4	37		58,2 17,8	58,1 18,75	58 19,7	57,9 20,5	57,8 21,7	57,6 22,9	57,2 24,4	56,3 25,9	55,7 27,4	54,5 28,8	52,7 30,9	50,5 32,7	49 33,85	47 35	44* 36,5

PUMP B-N4	PUMP N4	MOTOR	P_2 kW	Q m³/h	84	96	108	**120**	132	150	168	180	192	210	**240**	270	300	330
				Q l/min	1400	1600	1800	**2000**	2200	2500	2800	3000	3200	3500	**4000**	4500	5000	5500
B-N4 125-250E/A	N4 125-250E/A	132 S4	5,5	H m / P_3 kW	11 4,2	10,8 4,5	10,5 4,75	10,1 4,95	9,7 5,05	9,1 5,2	8,3 5,35	7,8 5,45	7,2 5,5	6,2 5,5	4,4 5,35			
B-N4 125-250D/A	N4 125-250D/A	132 M4	7,5		14 5,4	13,9 5,7	13,7 5,95	13,4 6,2	13 6,45	12,4 6,75	11,6 7	11 7,1	10,4 7,2	9,4 7,35	7,4 7,4	5,1 7,1		
B-N4 125-250C/A	N4 125-250C/A	160 M4	11		16,7 6,3	16,6 6,7	16,4 7,1	16,2 7,4	15,9 7,65	15,4 8,05	14,6 8,4	14,1 8,6	13,5 8,75	12,5 9	10,4 9,2	8,2 9,2	5,8 9,05	
B-N4 125-250B/A	N4 125-250B/A	160 M4	11		19,3 7,8	19,2 8,25	19,1 8,7	18,9 9,1	18,7 9,45	18,2 10	17,5 10,35	17 10,6	16,3 10,85	15,3 11,1	13,3 11,4	10,9 11,45	8,2 11,3	
B-N4 125-250A/A	N4 125-250A/A	160 L4	15		22,7 9,2	22,7 9,75	22,6 10,3	22,4 10,85	22,2 11,3	21,8 12	21,2 12,6	20,8 12,95	20,1 13,25	19,33 13,75	17,4 14,3	15 14,5	12,4 14,55	9,3 14,4
B-N4 125-315C/A	N4 125-315C/A	180 M4	18,5		27,9 11,5	27,8 12,15	27,7 12,8	27,6 13,4	27,2 14	26,5 14,7	25,6 15,4	24,9 15,8	24 16,2	22,8 16,7	20,2 17,3	17 17,7	13,5 18	9,5* 18
B-N4 125-315B/A	N4 125-315B/A	180 L4	22		31,8 12,75	31,7 13,6	31,6 14,45	31,5 15,3	31,1 15,9	30,6 16,8	29,7 17,7	29,1 18,4	28,5 19	27,3 19,7	24,9 20,6	22 21,4	18,5 22	14,3* 22,1
B-N4 125-315A/A	N4 125-315A/A	200 L4	30		36,8 15,5	36,8 16,5	36,7 17,5	36,6 18,3	36,4 19,1	35,9 20,4	35,2 21,6	34,7 22,4	34,2 23,1	33,2 24,15	31 25,6	28,4 26,6	25,3 27,6	21,6* 28,45
B-N4 125-400C/A	N4 125-400C/A	225 S4	37		45,4 19,4	45,3 20,7	45,2 22	45,1 23,3	44,9 24,6	44,4 26,5	43,7 28,2	43 29,3	42 30,2	40 31,4	37 33,4	33 35	28,5* 35,9	23,5* 36,75
B-N4 125-400B/A	N4 125-400B/A	225 M4	45		51,4 22,9	51,3 24,3	51,2 25,7	51,1 27,1	50,9 28,4	50,4 30,35	49,7 32,2	49 33,3	48,2 34,4	46,8 36	44 38,5	40,5 41	36* 43	31,5* 44,5
B-N4 125-400A/A	N4 125-400A/A	250 M4	55		59,2 27,8	59,1 29,4	59 30,9	58,9 32,4	58,7 33,9	58,2 36,2	57,7 38,4	57,2 39,8	56,7 41,2	55,7 43,2	53,5 46,2	50,5 49,2	46,5* 52,1	42,5* 54,4

PUMP B-N4	PUMP N4	MOTOR	P_2 kW	Q m³/h	132	150	168	180	192	210	**240**	270	300	330	360	390	420	450	480
				Q l/min	2200	2500	2800	3000	3200	3500	**4000**	4500	5000	5500	6000	6500	7000	7500	8000
B-N4 150-315D/A	N4 150-315D/A	180 M4	18,5	H m / P_3 kW	22,8 13,8	22,6 14,5	22,3 15	22 15,4	21,7 15,75	21,1 16,2	20 16,9	18,6 17,6	17 18	15,1 18,35	13 18,45	10,6 18,4	8* 18,15		
B-N4 150-315C/A	N4 150-315C/A	180 L4	22		25,6 15,6	25,4 16,44	25,1 17,2	24,9 17,65	24,7 18,1	24,2 18,8	23,3 19,7	22 20,6	20,4 21,3	18,5 21,75	16,5 22	14,1 22	11,6* 22	8,9* 21,65	
B-N4 150-315B/A	N4 150-315B/A	200 L4	30		30,6 19	30,6 20	30,5 21	30,3 21,6	30,1 22,15	29,7 23	29 24,35	27,9 25,7	26,5 26,6	24,9 27,5	23 28,1	20,8 28,7	18,3* 28,9	15,4* 29	
B-N4 150-315A/A	N4 150-315A/A	225 S4	37		35,6 23,1	35,6 24,4	35,5 25,7	35,4 26,5	35,3 27,2	35,2 28,3	34,6 30	33,7 31,6	32,5 33,1	31 34,3	29,2 35,4	27,1 36,3	24,7* 37	21,8* 37,5	18,5* 37,8
B-N4 150-400C/A	N4 150-400C/A	225 M4	45		45 27,9	44,9 29,65	44,7 31,4	44,5 32,6	44 33,8	43,5 35,3	42,5 37,7	40,5 39,7	38,5 41,3	36 42,7	33,5 43,8	30,5 44,1	27* 44,1	23,5* 44	19,5* 43
B-N4 150-400B/A	N4 150-400B/A	250 M4	55		50,8 31,4	50,7 33,6	50,5 35,8	50,3 36,9	50 38,2	49,5 40	48,5 42,8	47 45,5	45 47,7	43 49,8	40,5 51,5	38 53	35* 54,1	32* 54,6	28,5* 54,8
B-N4 150-400A/A	N4 150-400A/A	280 S4	75		58,8 38,2	58,7 40,7	58,6 42,8	58,5 44,35	58,3 45,7	57,9 48	57 51,5	55,5 54,4	54 57,1	52 59,7	49,5 62	47 64,2	44* 66	41* 67,5	37,5* 68,4

N4 Standard construction.
B-N4 Bronze construction.
P_2 Rated motor power output.
P_3 Pump power input.
H Total head in m.
* Maximum suction lift 1-2 m.

CALPEDA ROMANIA - INFINITY PUMPS SRL
Tel: 0268.33.47.47 / 0722.244.944
vanzari@calpeda.ro | www.calpeda.ro

N

End-Suction Centrifugal Pumps
standardized EN 733

Characteristic curves n ≈ 2900 rpm

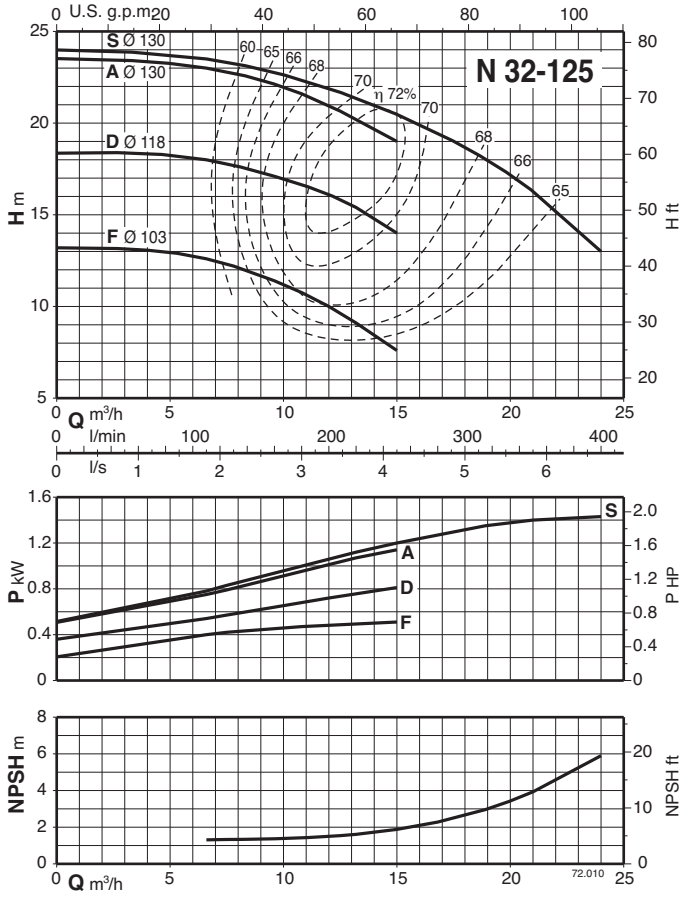

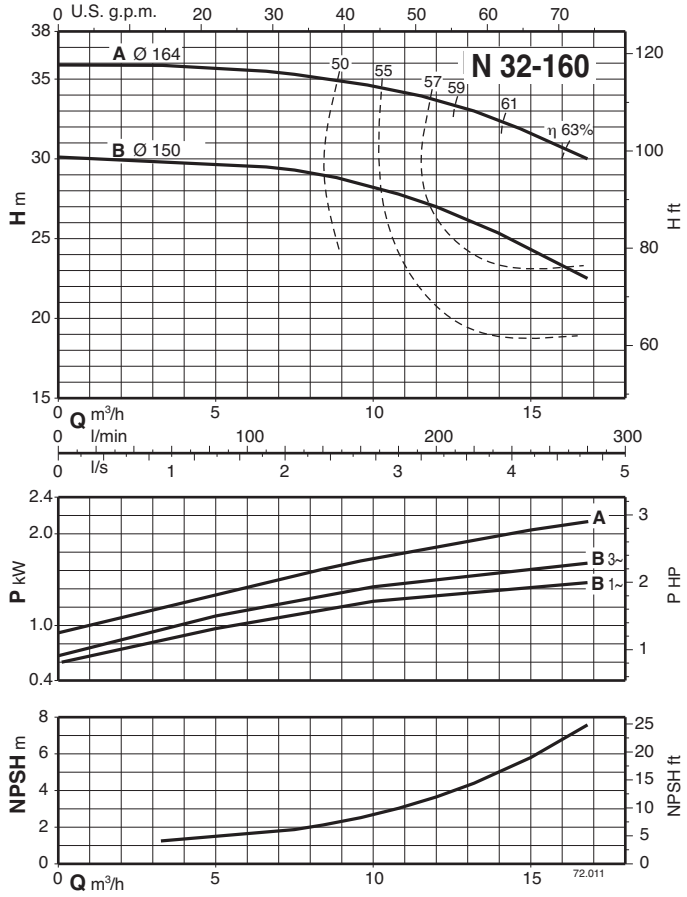

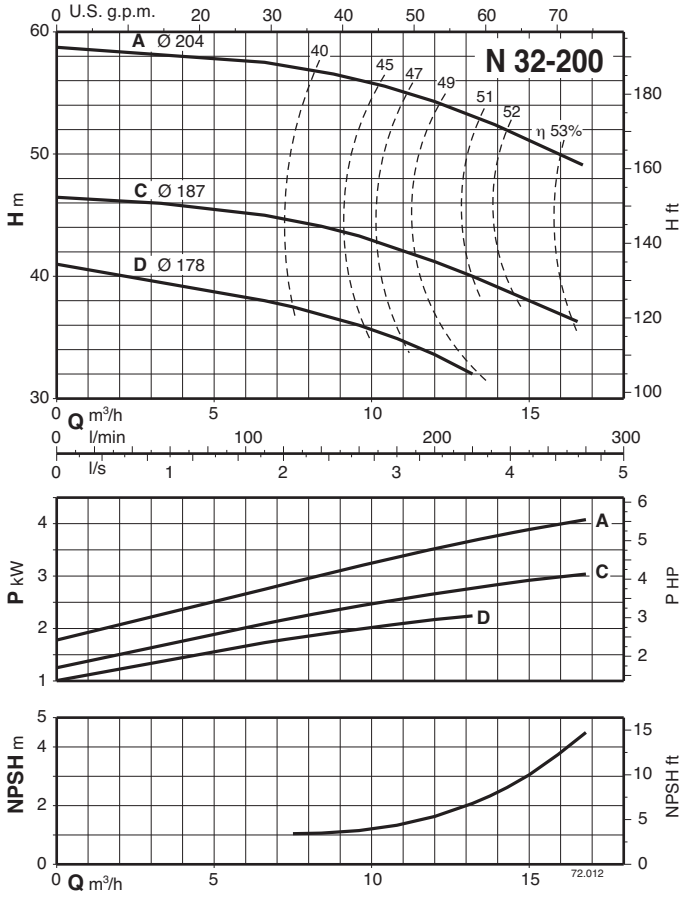

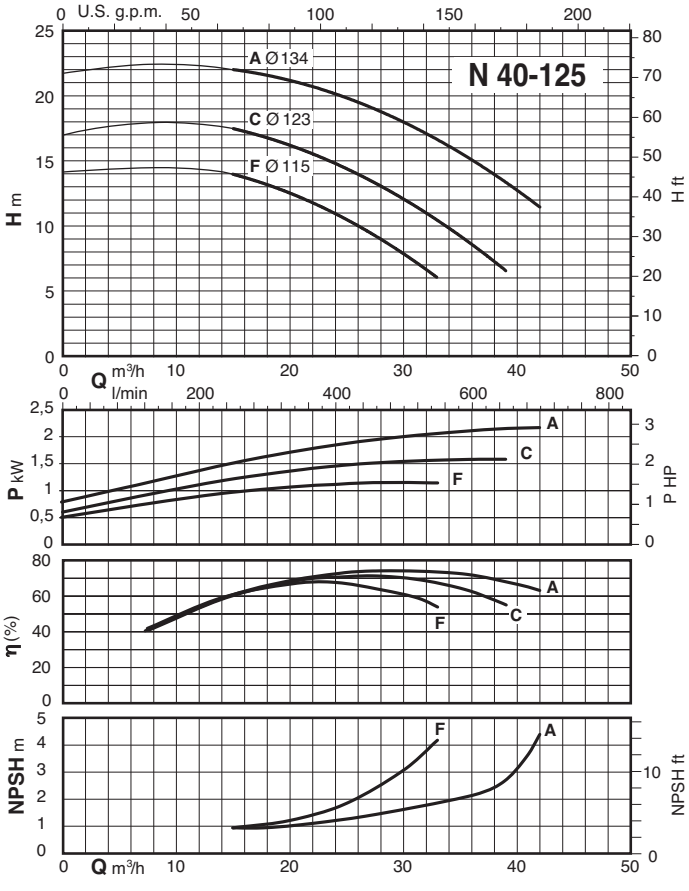

CALPEDA ROMANIA - INFINITY PUMPS SRL
Tel: 0268.33.47.47 / 0722.244.944
vanzari@calpeda.ro | www.calpeda.ro

N

End-Suction Centrifugal Pumps
standardized EN 733

Characteristic curves n ≈ 2900 rpm

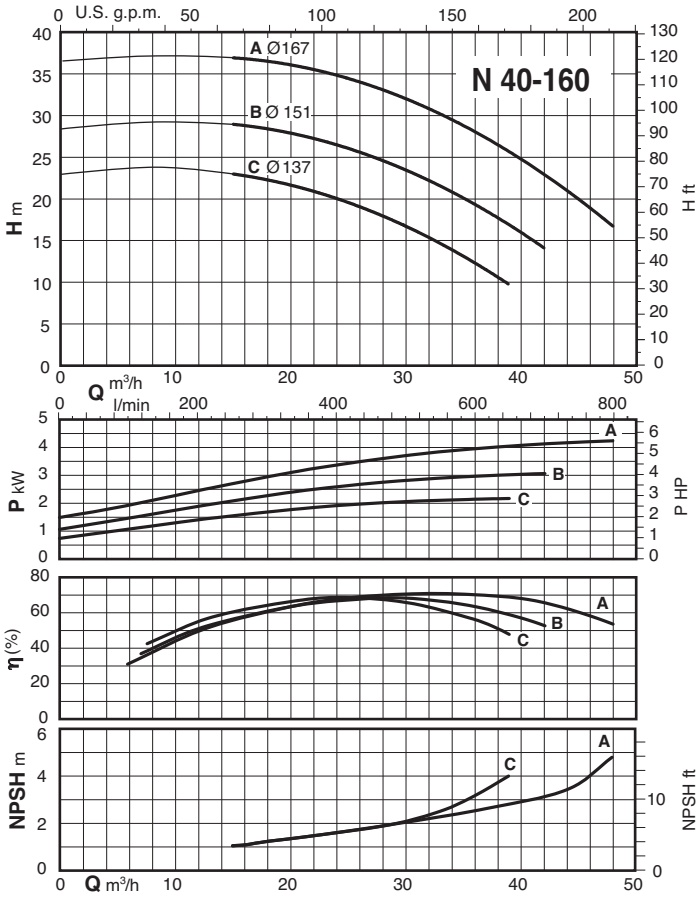

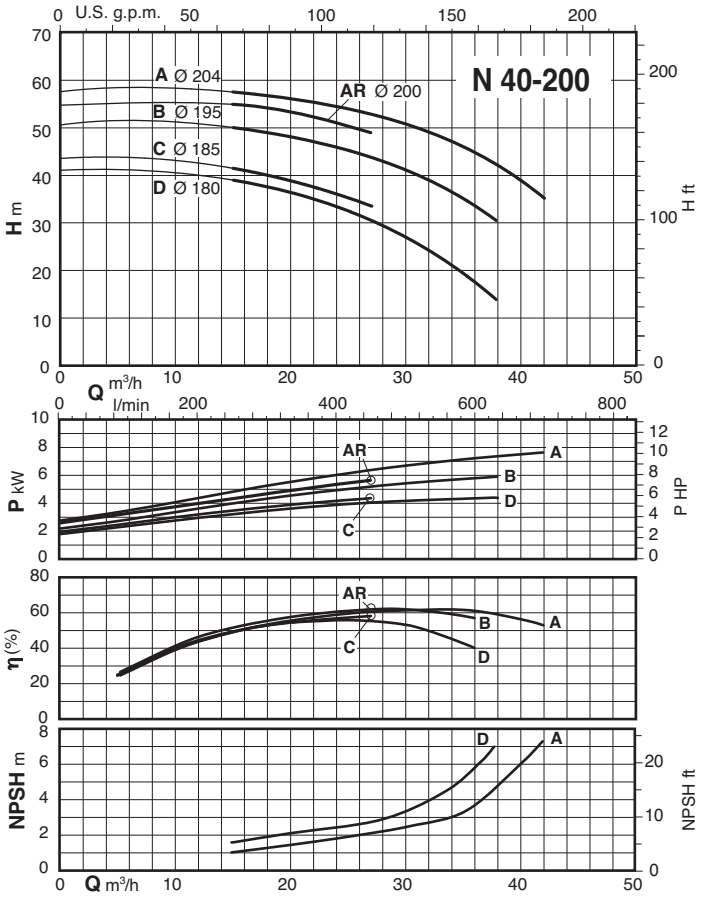

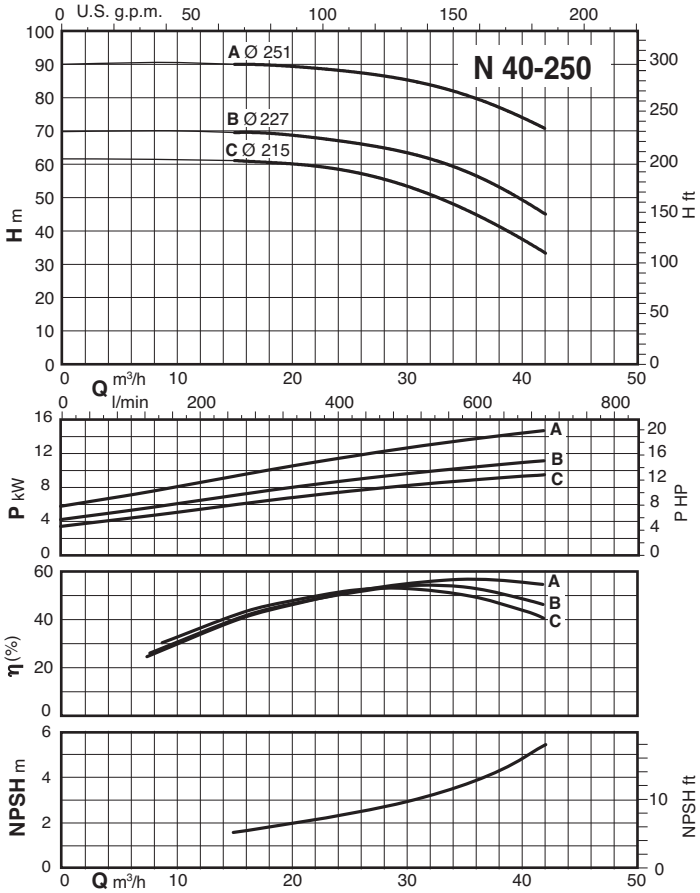

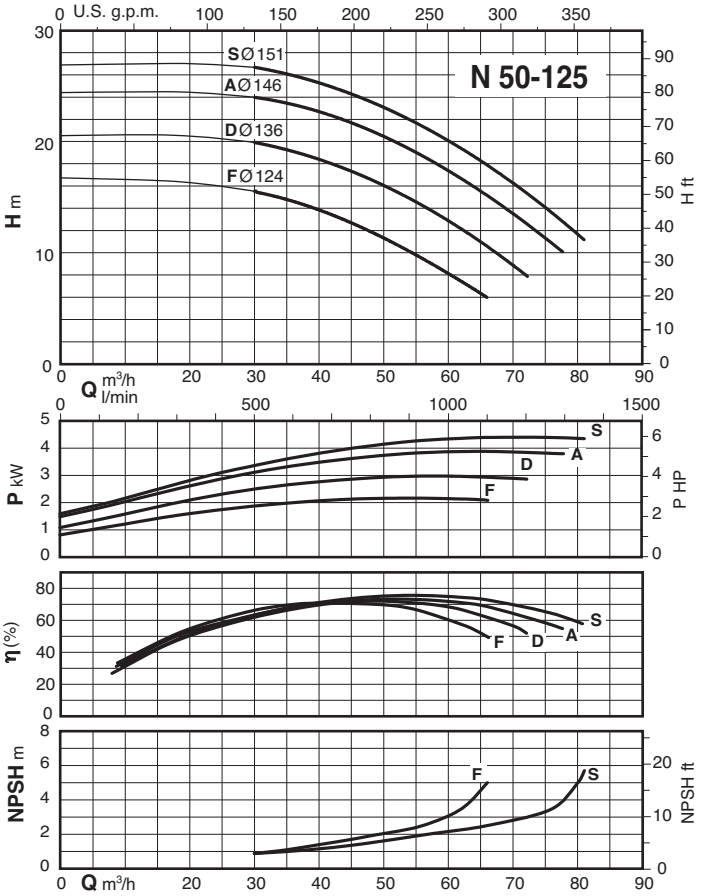

CALPEDA ROMANIA - INFINITY PUMPS SRL
Tel: 0268.33.47.47 / 0722.244.944
vanzari@calpeda.ro | www.calpeda.ro

N

End-Suction Centrifugal Pumps
standardized **EN 733**

Characteristic curves n ≈ 2900 rpm

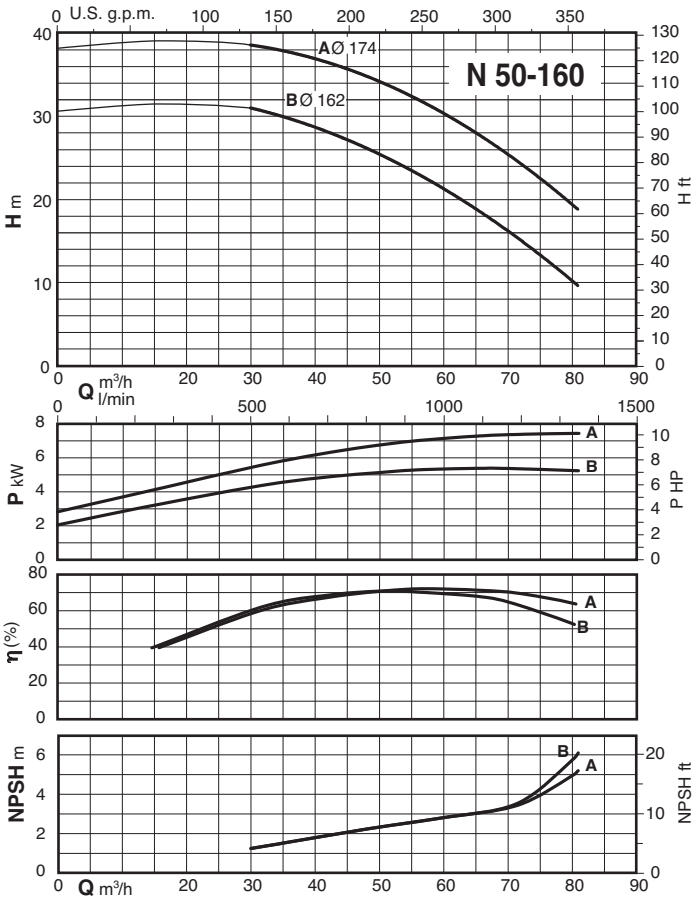

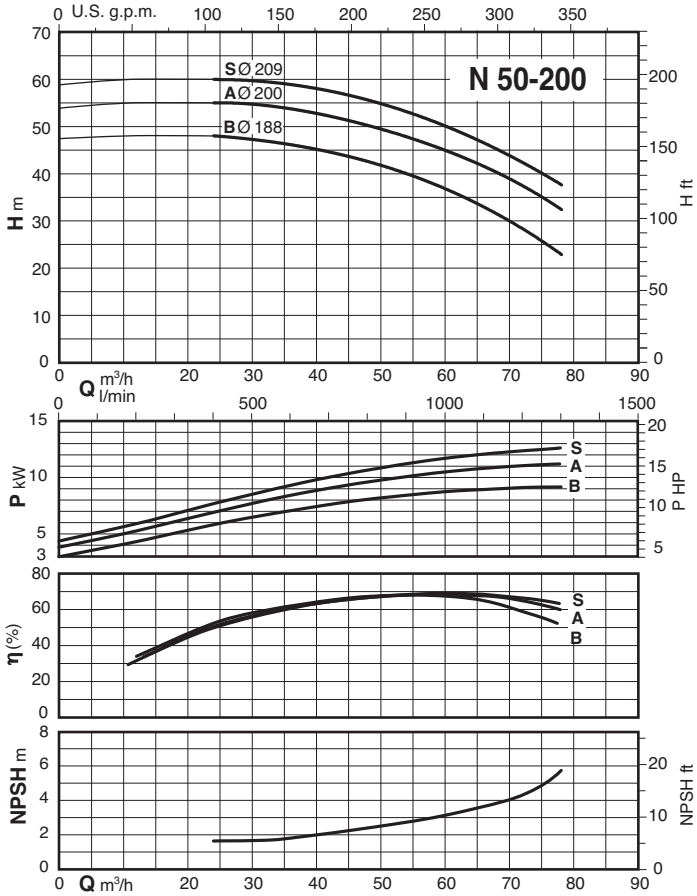

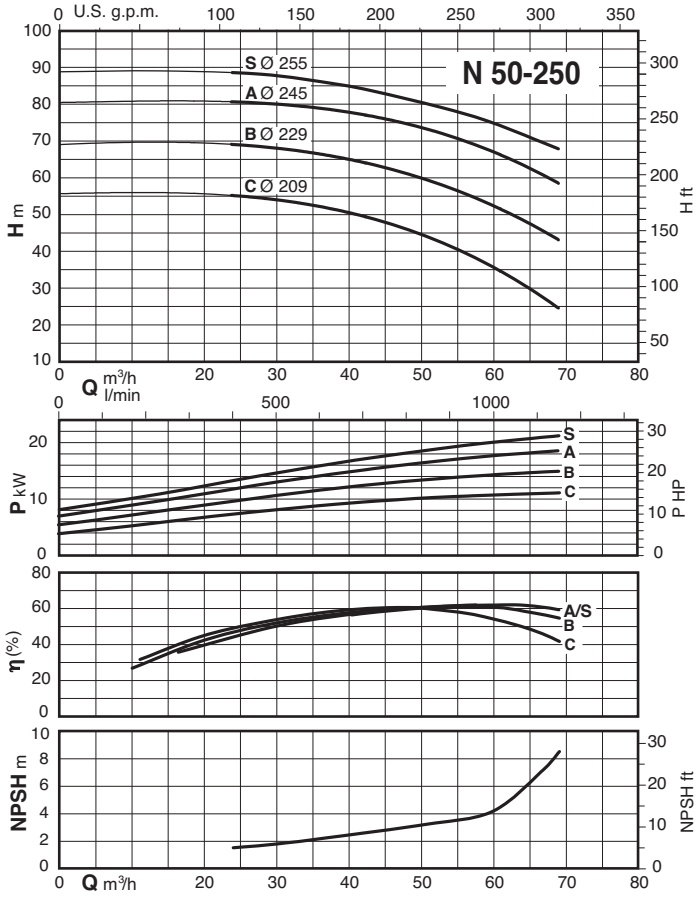

CALPEDA ROMANIA - INFINITY PUMPS SRL
Tel: 0268.33.47.47 / 0722.244.944
vanzari@calpeda.ro | www.calpeda.ro

N

End-Suction Centrifugal Pumps
standardized **EN 733**

calpeda

Characteristic curves n ≈ 2900 rpm

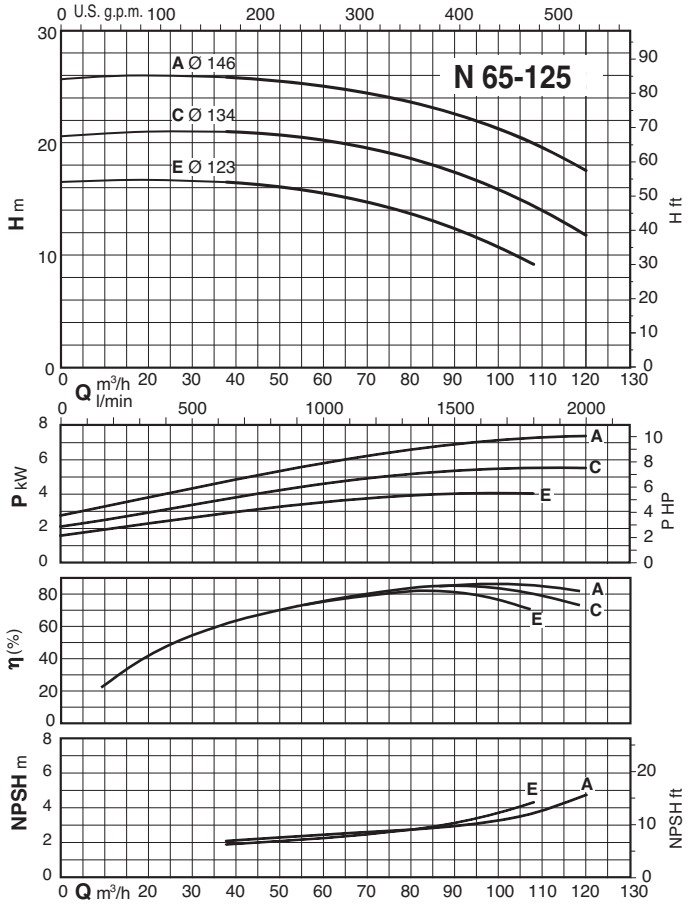

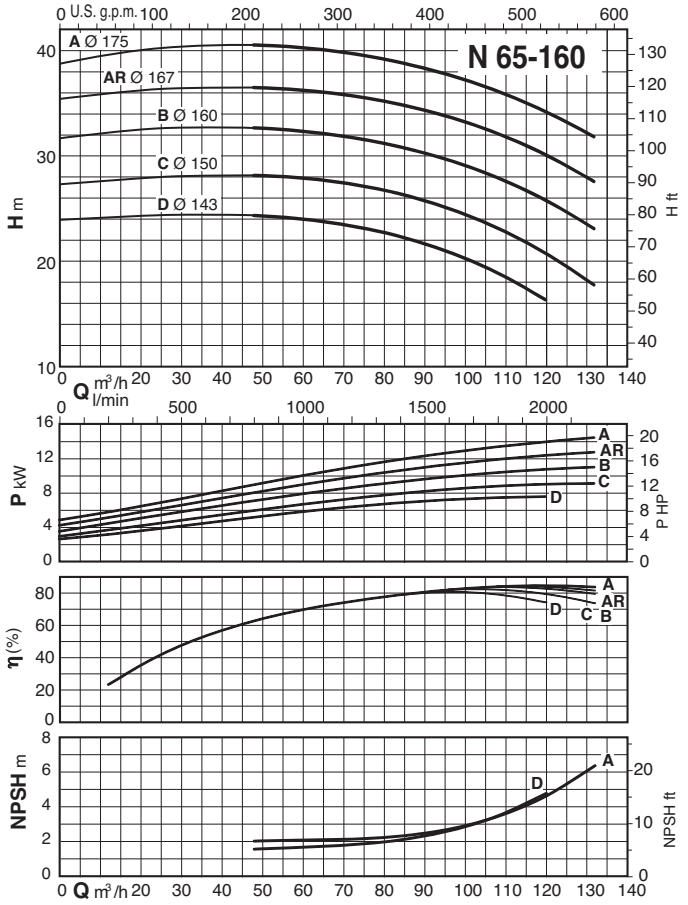

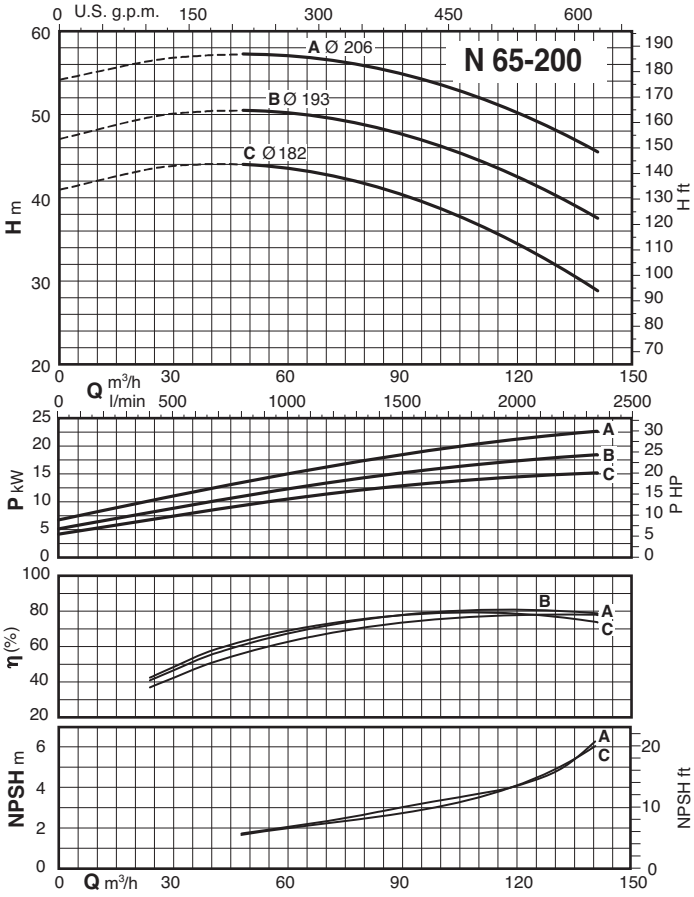

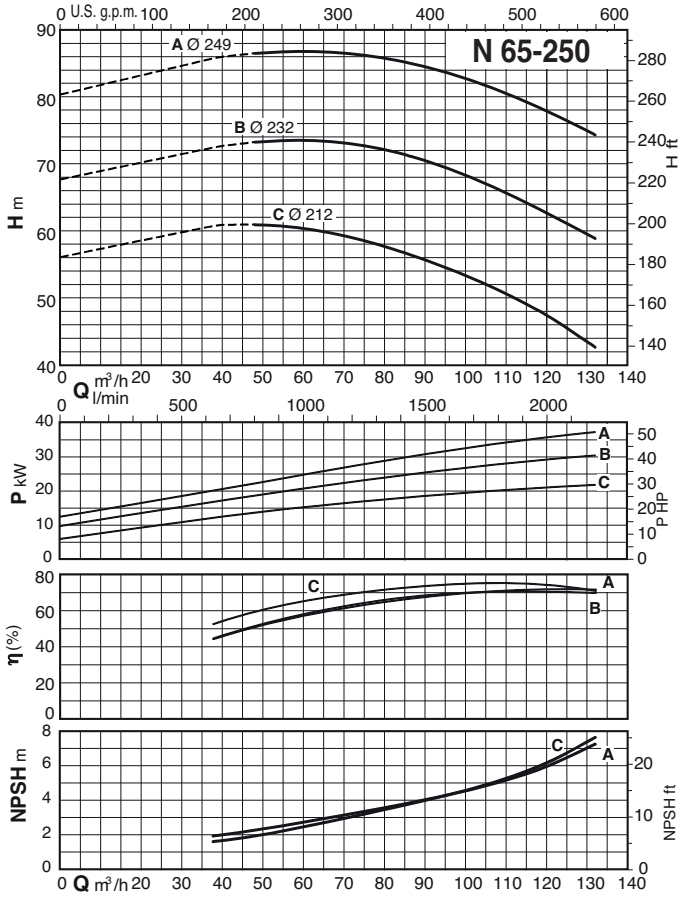

CALPEDA ROMANIA - INFINITY PUMPS SRL
Tel: 0268.33.47.47 / 0722.244.944
vanzari@calpeda.ro | www.calpeda.ro

N

End-Suction Centrifugal Pumps
standardized **EN 733**

Characteristic curves n ≈ 2900 rpm

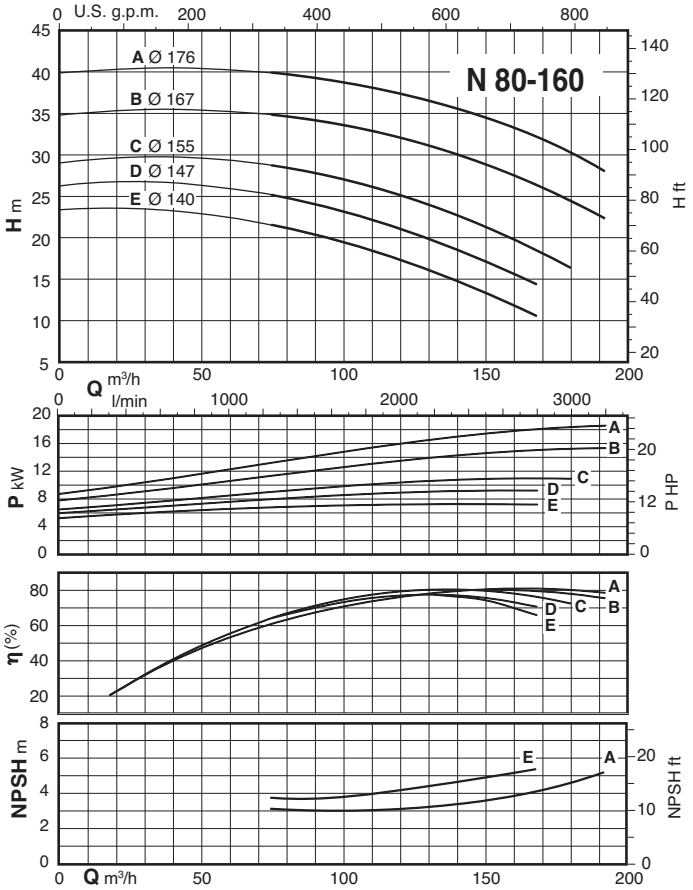

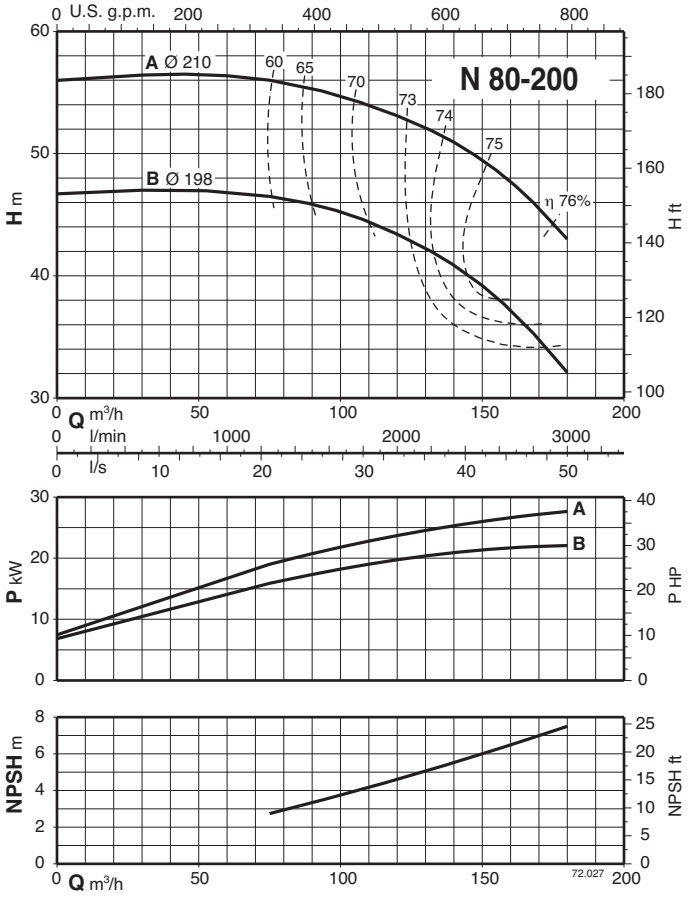

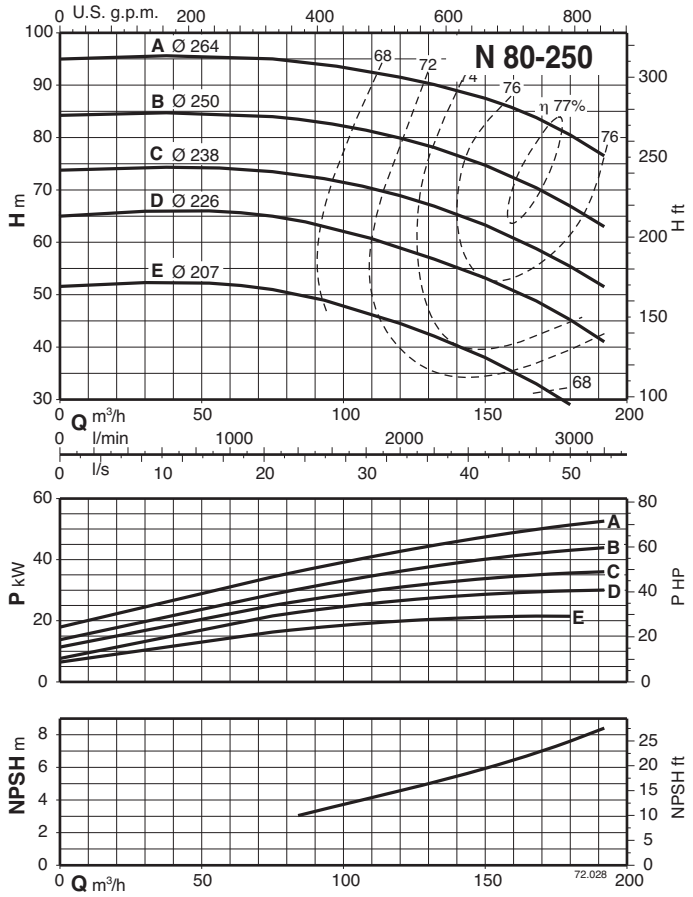

CALPEDA ROMANIA - INFINITY PUMPS SRL
Tel: 0268.33.47.47 / 0722.244.944
vanzari@calpeda.ro | www.calpeda.ro

N

End-Suction Centrifugal Pumps
standardized EN 733

Characteristic curves n ≈ 2900 rpm

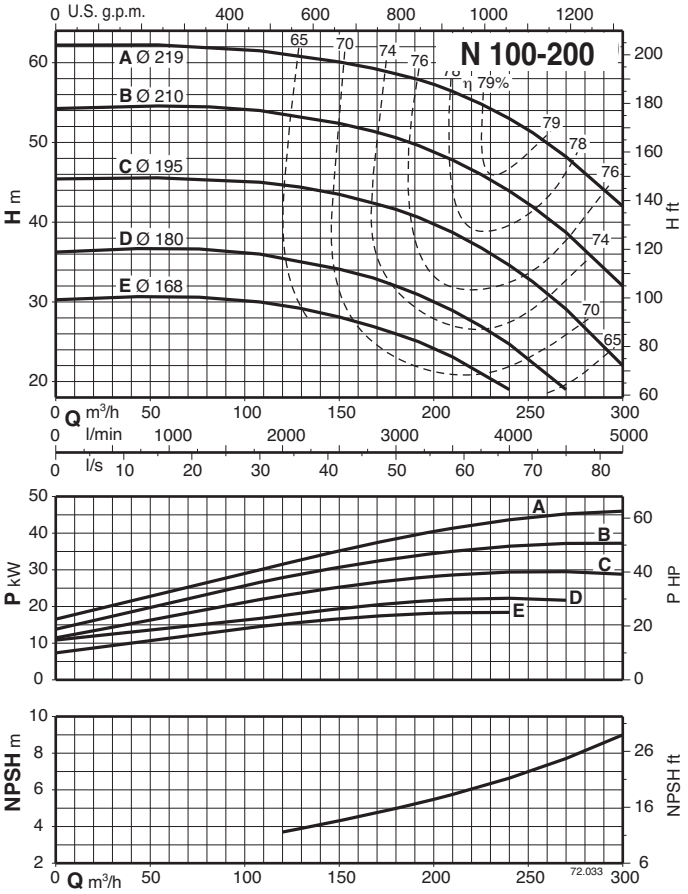

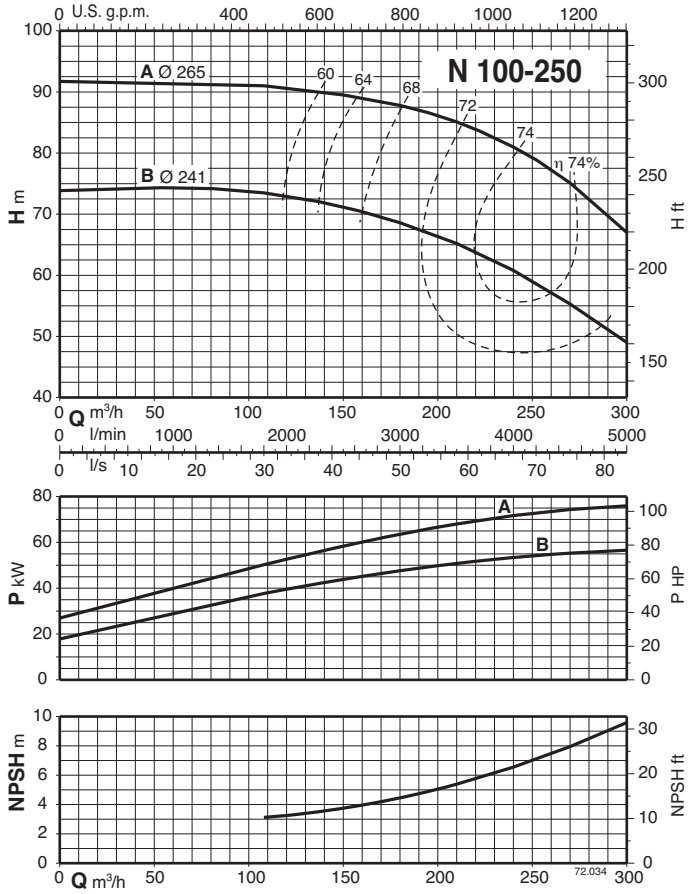

CALPEDA ROMANIA - INFINITY PUMPS SRL
Tel: 0268.33.47.47 / 0722.244.944
vanzari@calpeda.ro | www.calpeda.ro

N4 End-Suction Centrifugal Pumps
standardized EN 733

calpeda

Characteristic curves n ≈ 1450 rpm

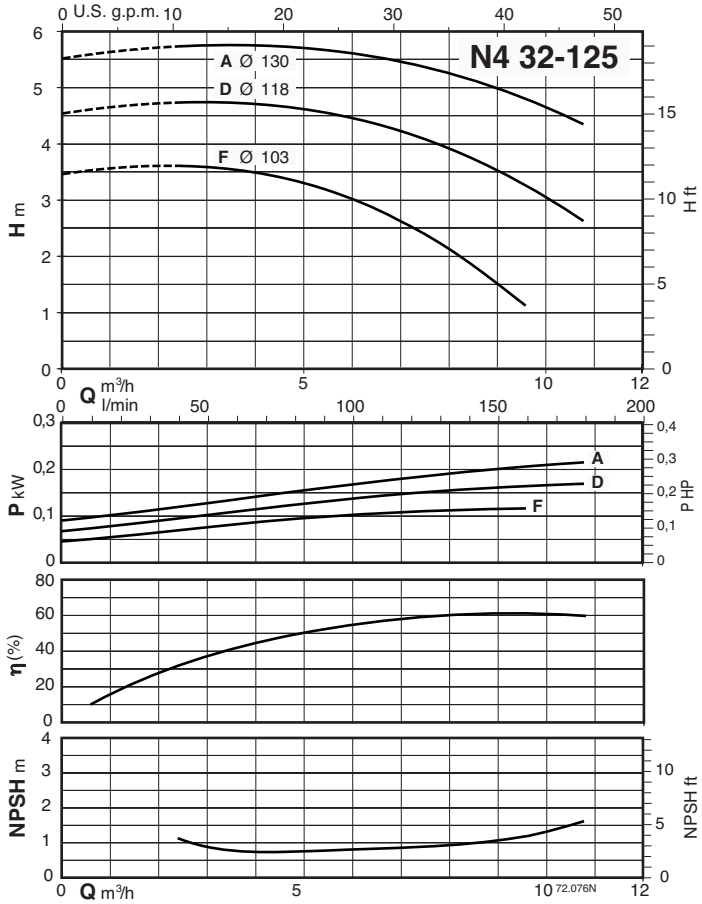

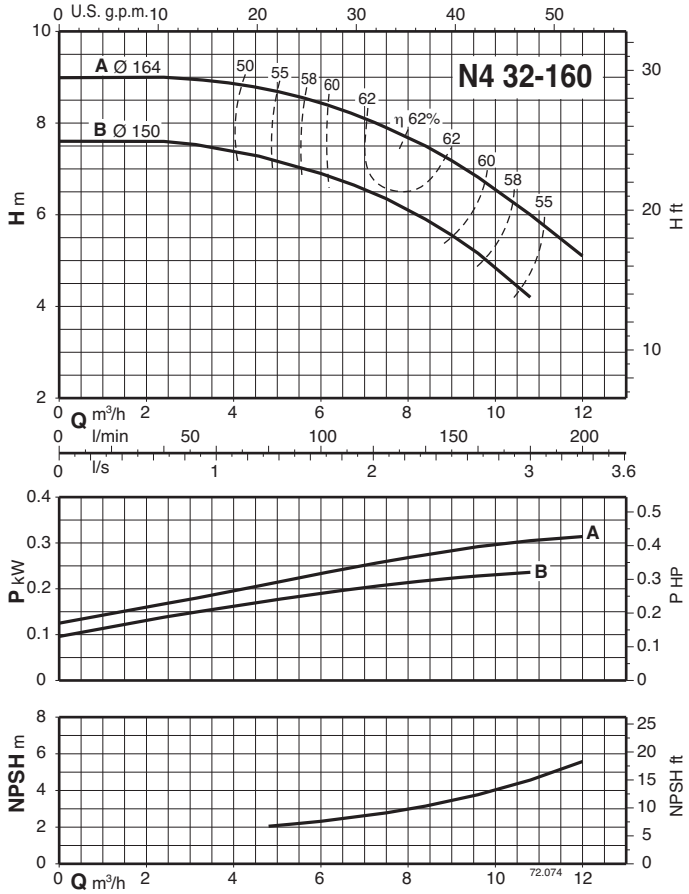

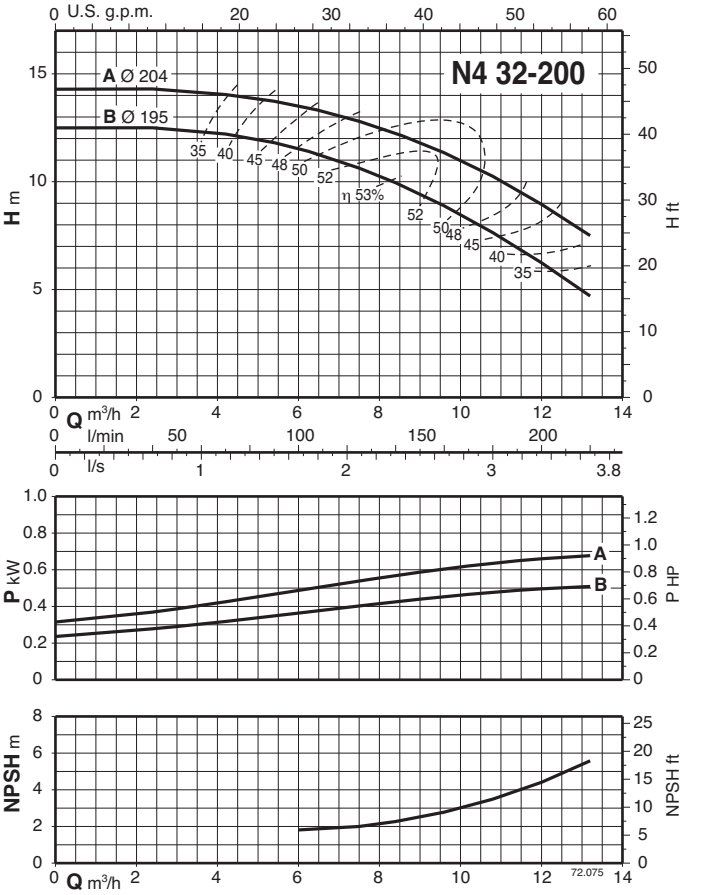

CALPEDA ROMANIA - INFINITY PUMPS SRL
Tel: 0268.33.47.47 / 0722.244.944
vanzari@calpeda.ro | www.calpeda.ro

N4 End-Suction Centrifugal Pumps standardized EN 733

calpeda

Characteristic curves n ≈ 1450 rpm

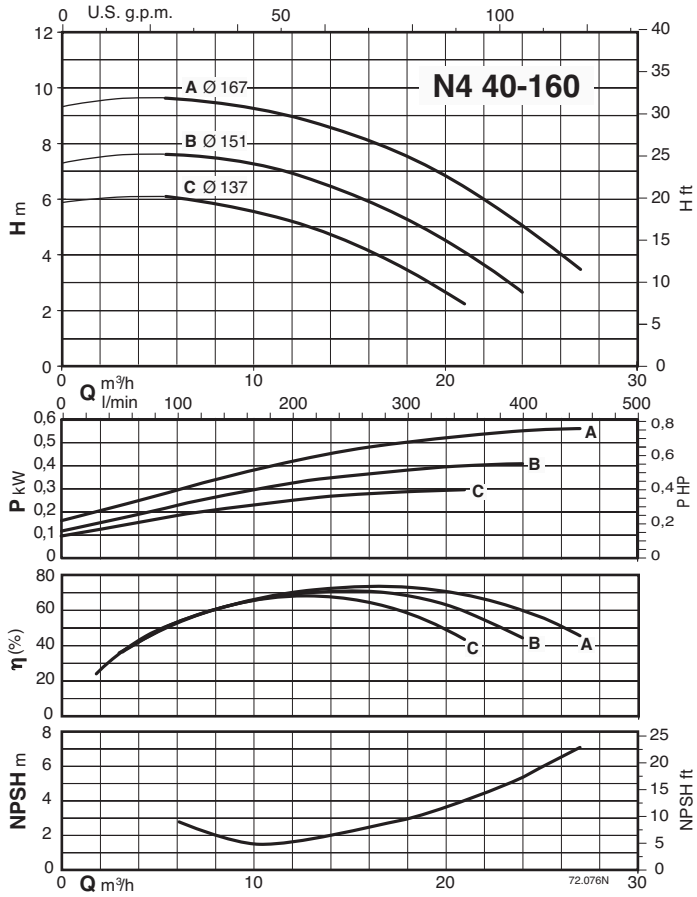

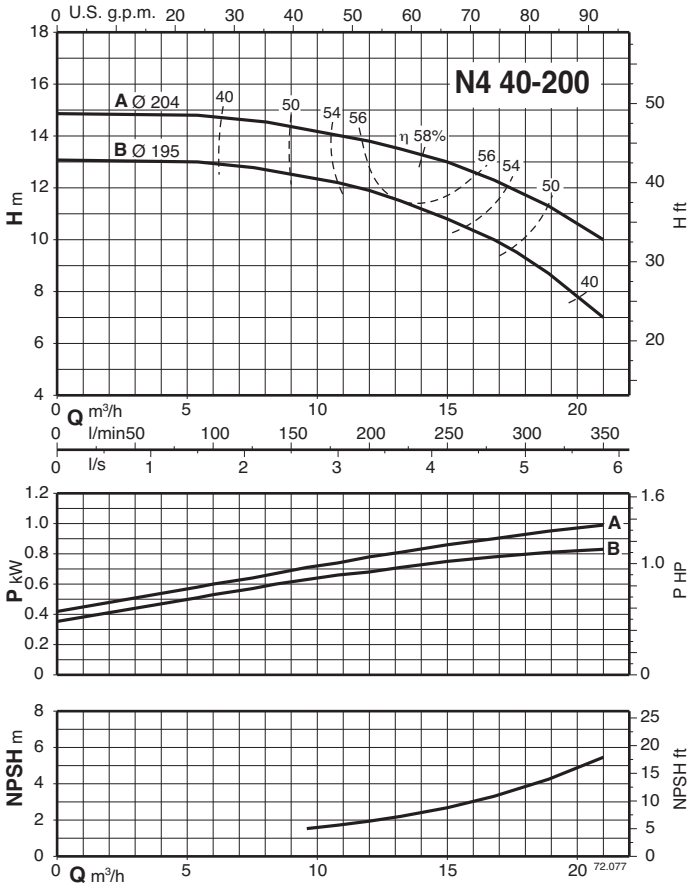

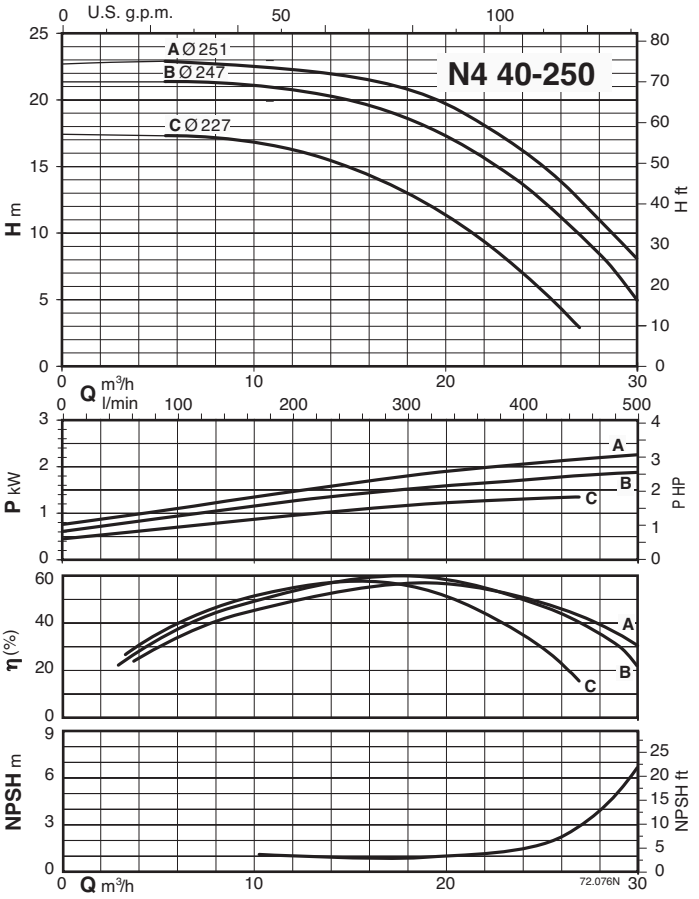

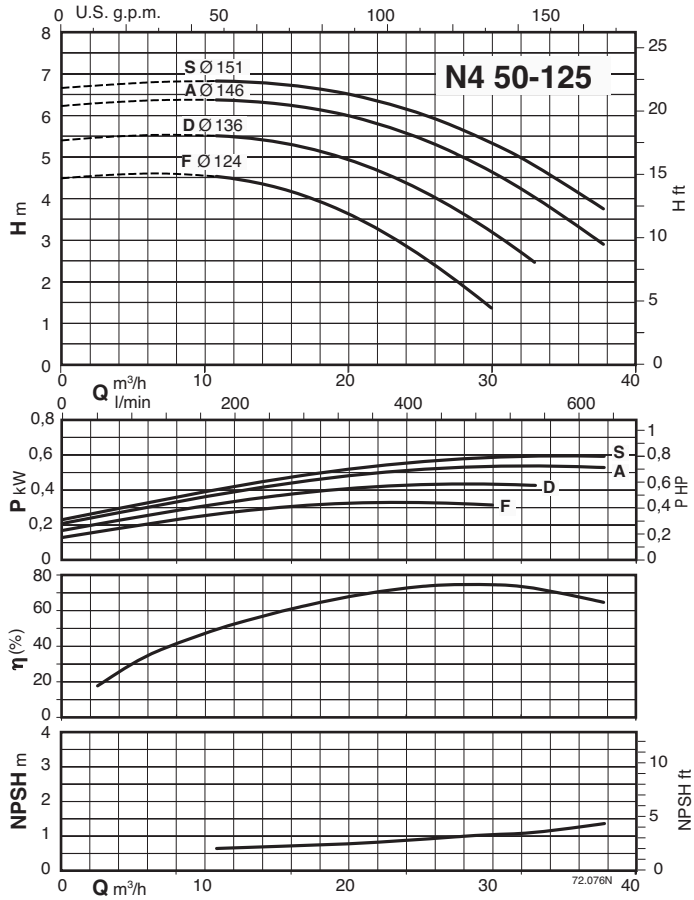

CALPEDA ROMANIA - INFINITY PUMPS SRL
Tel: 0268.33.47.47 / 0722.244.944
vanzari@calpeda.ro | www.calpeda.ro

N4 End-Suction Centrifugal Pumps
standardized **EN 733**

calpeda

Characteristic curves n ≈ 1450 rpm

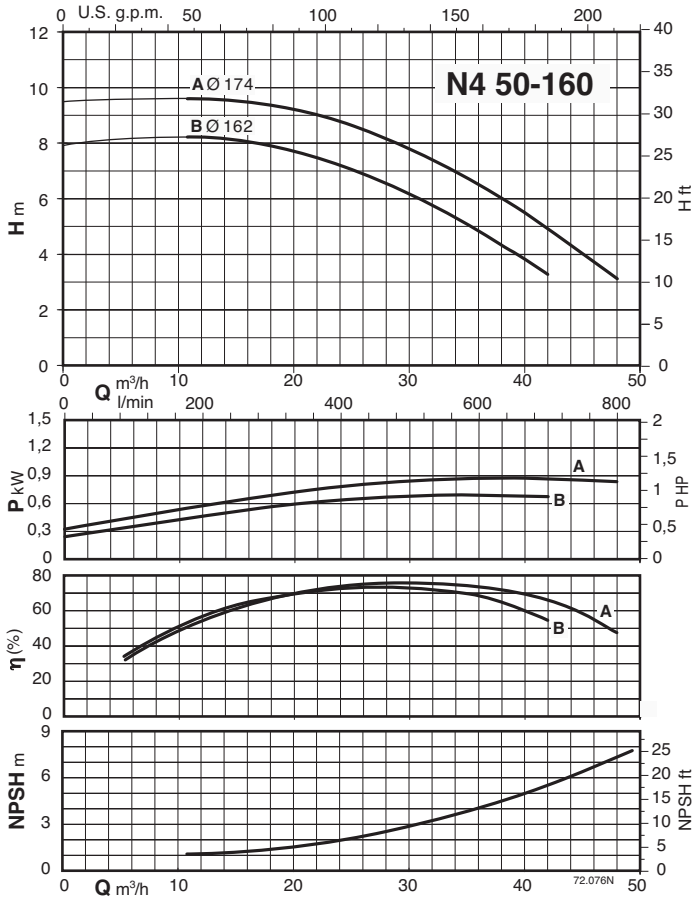

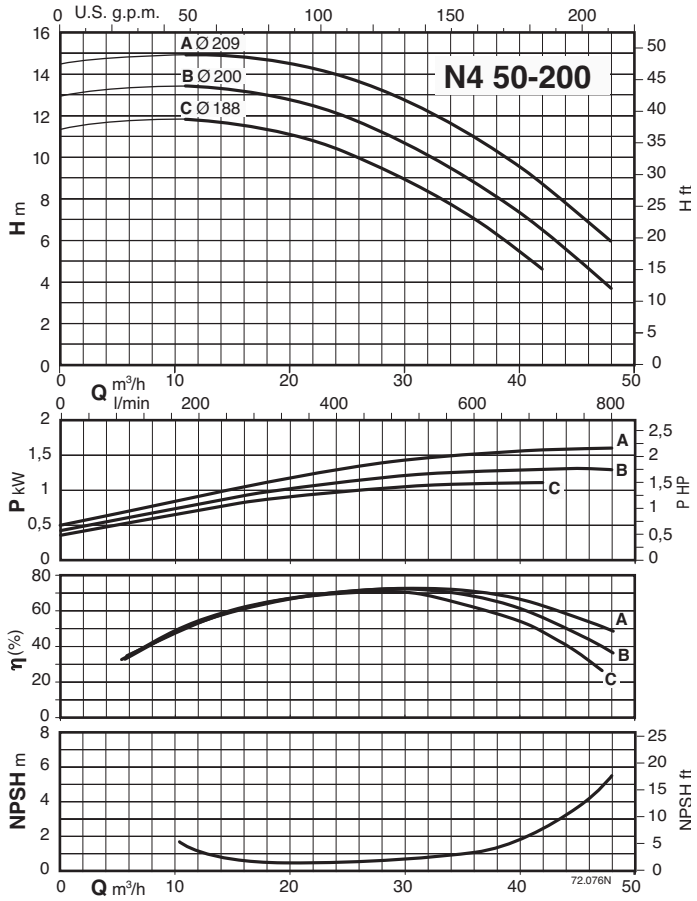

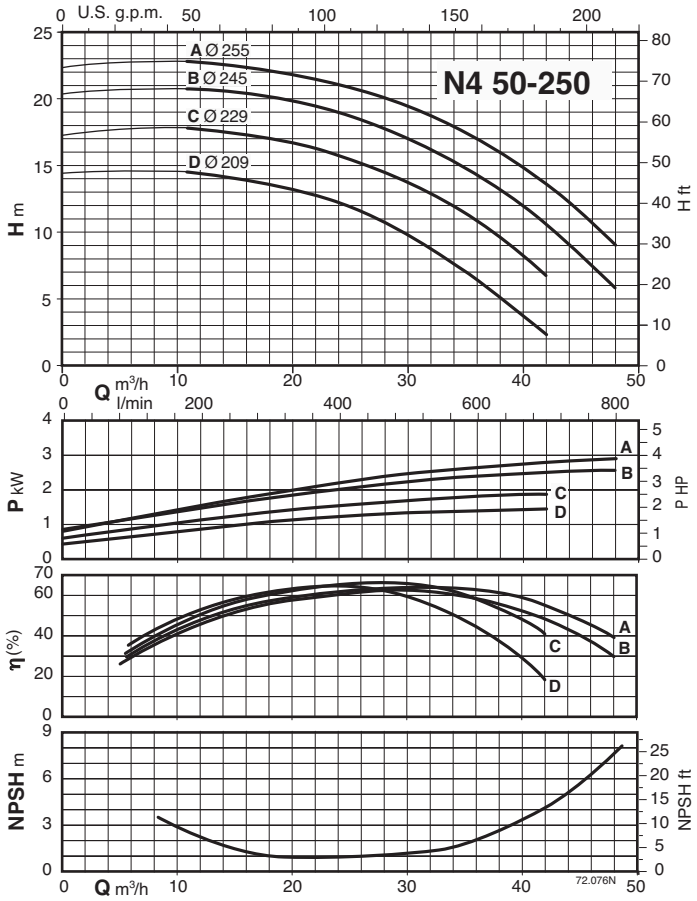

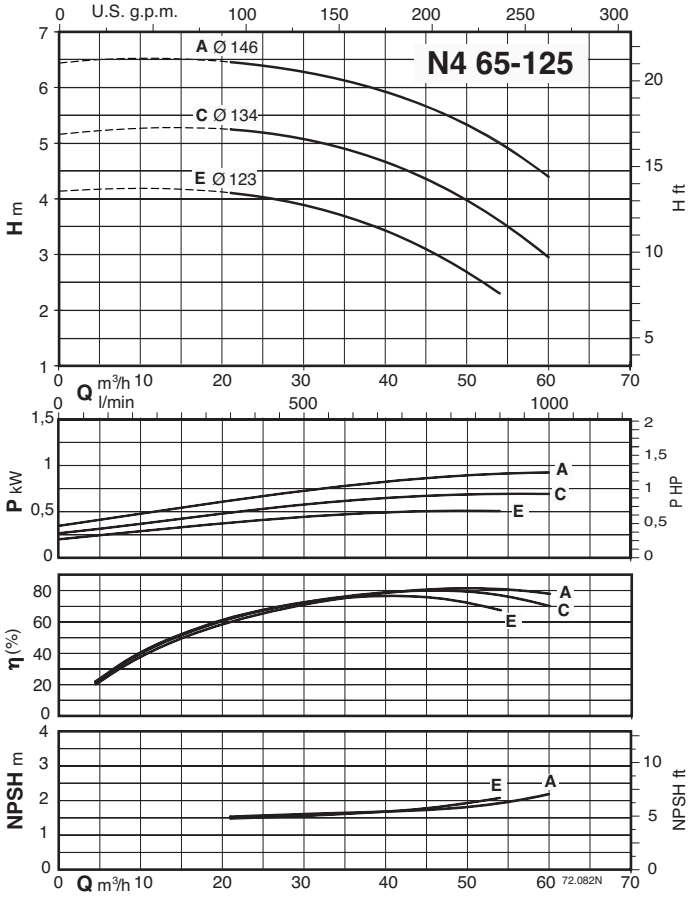

CALPEDA ROMANIA - INFINITY PUMPS SRL
Tel: 0268.33.47.47 / 0722.244.944
vanzari@calpeda.ro | www.calpeda.ro

N4 End-Suction Centrifugal Pumps standardized EN 733

calpeda

Characteristic curves n ≈ 1450 rpm

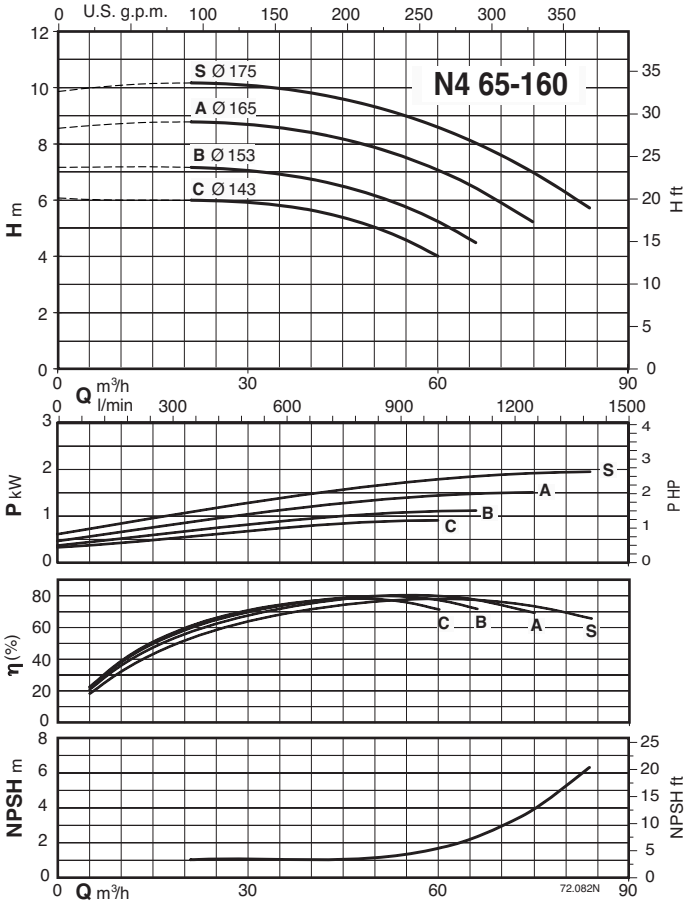

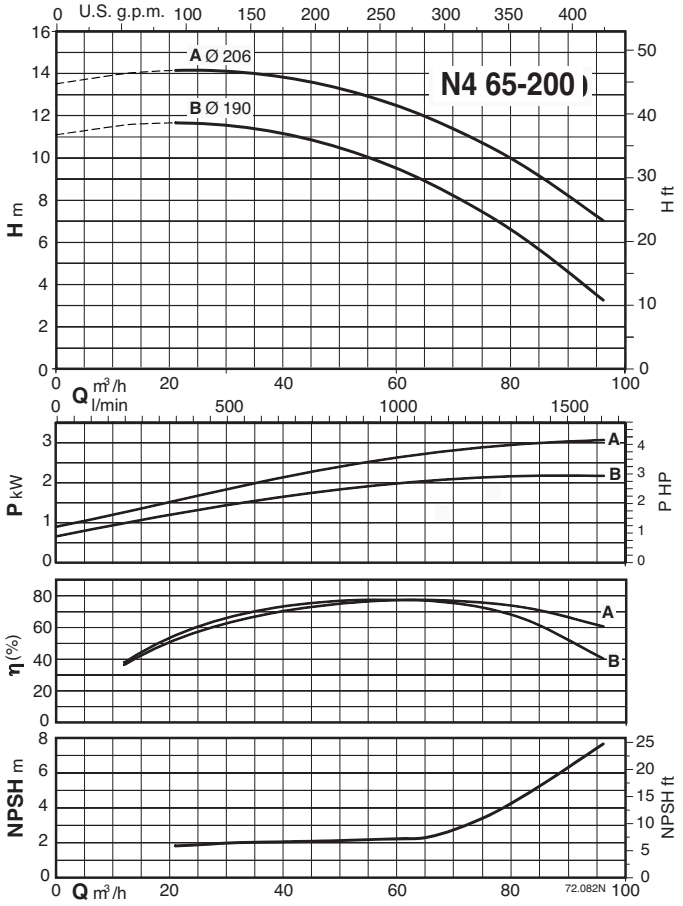

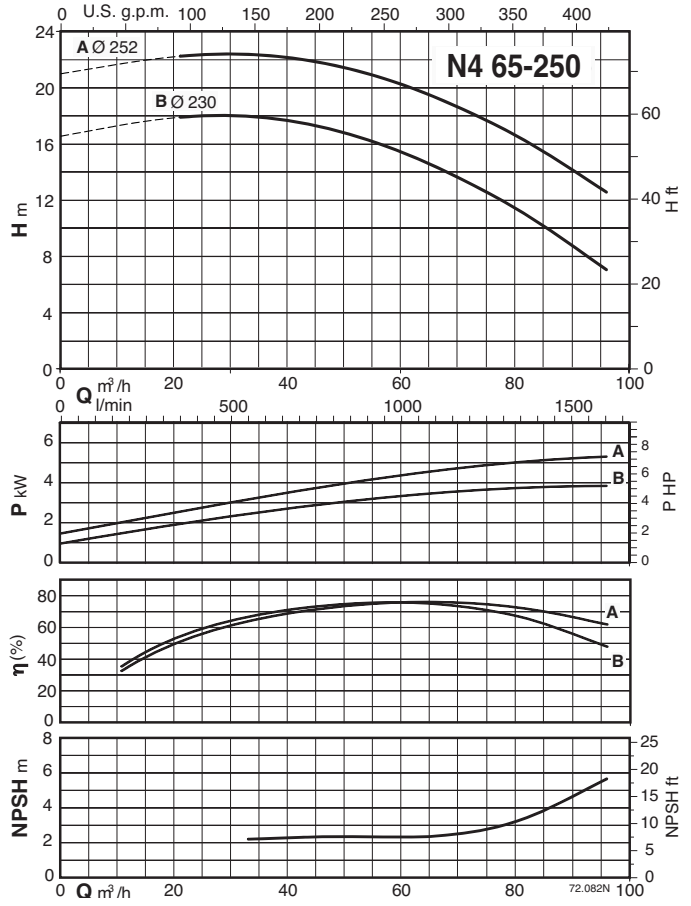

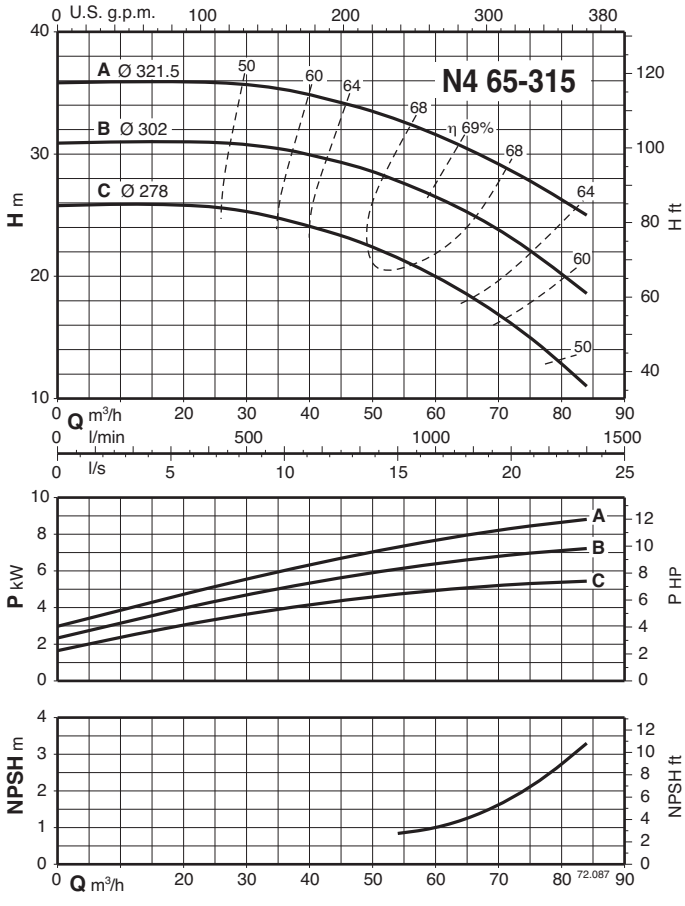

CALPEDA ROMANIA - INFINITY PUMPS SRL
Tel: 0268.33.47.47 / 0722.244.944
vanzari@calpeda.ro | www.calpeda.ro

N4 End-Suction Centrifugal Pumps
standardized **EN 733**

calpeda

Characteristic curves n ≈ 1450 rpm

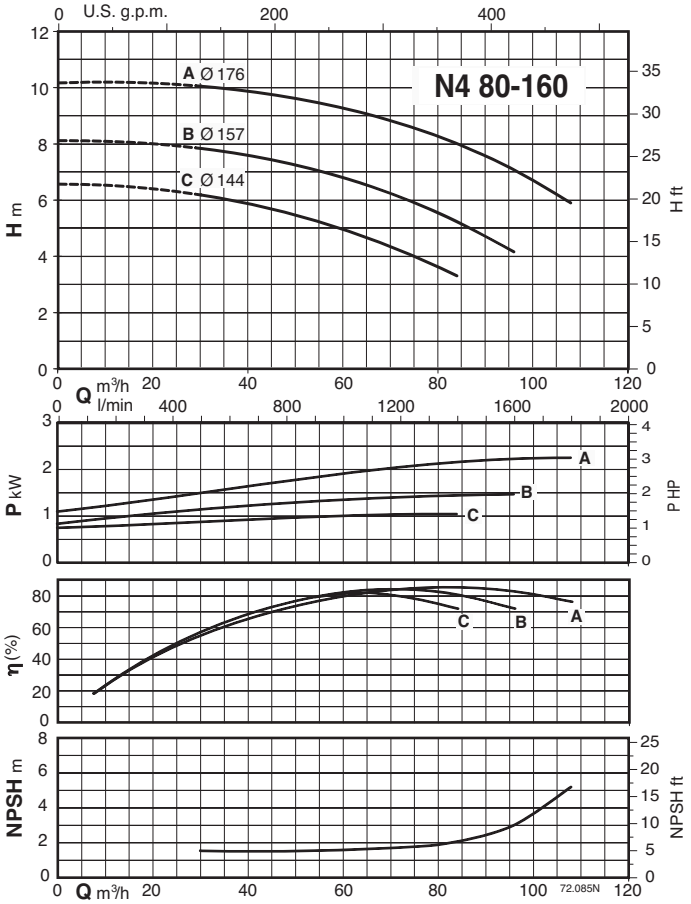

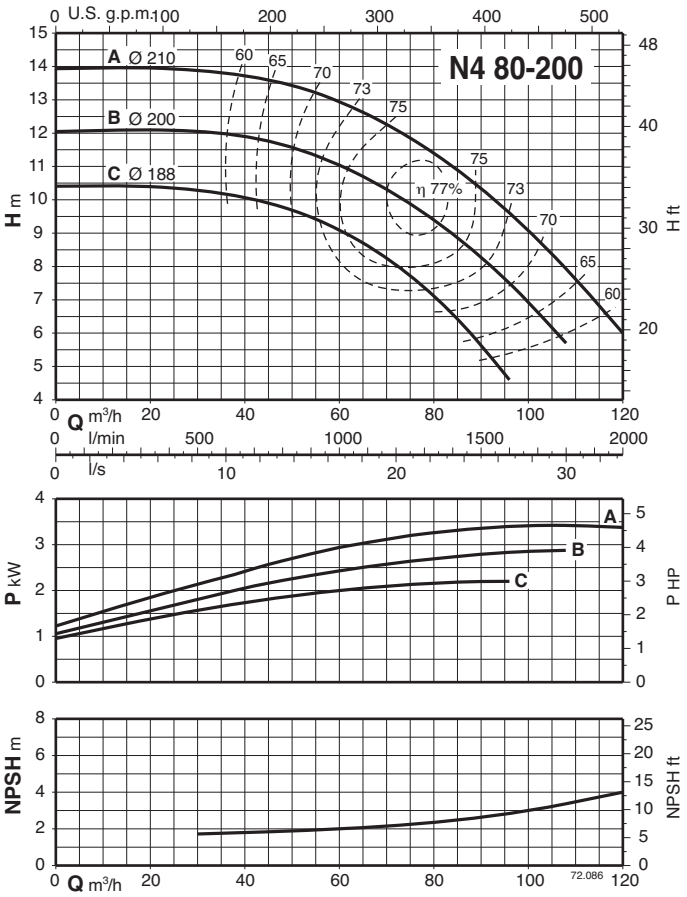

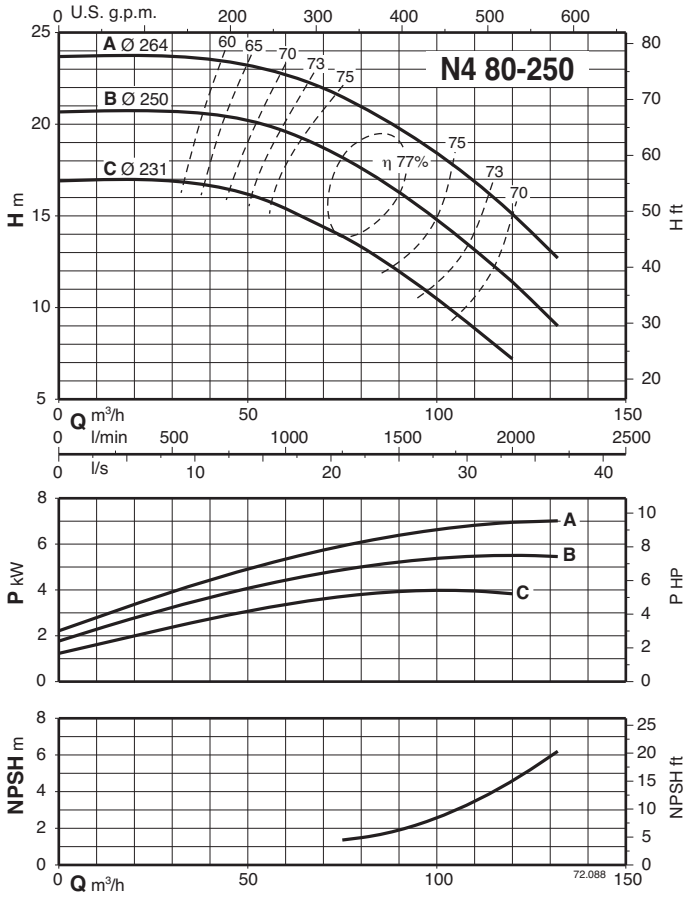

CALPEDA ROMANIA - INFINITY PUMPS SRL
Tel: 0268.33.47.47 / 0722.244.944
vanzari@calpeda.ro | www.calpeda.ro

N4 End-Suction Centrifugal Pumps
standardized EN 733

Characteristic curves n ≈ 1450 rpm

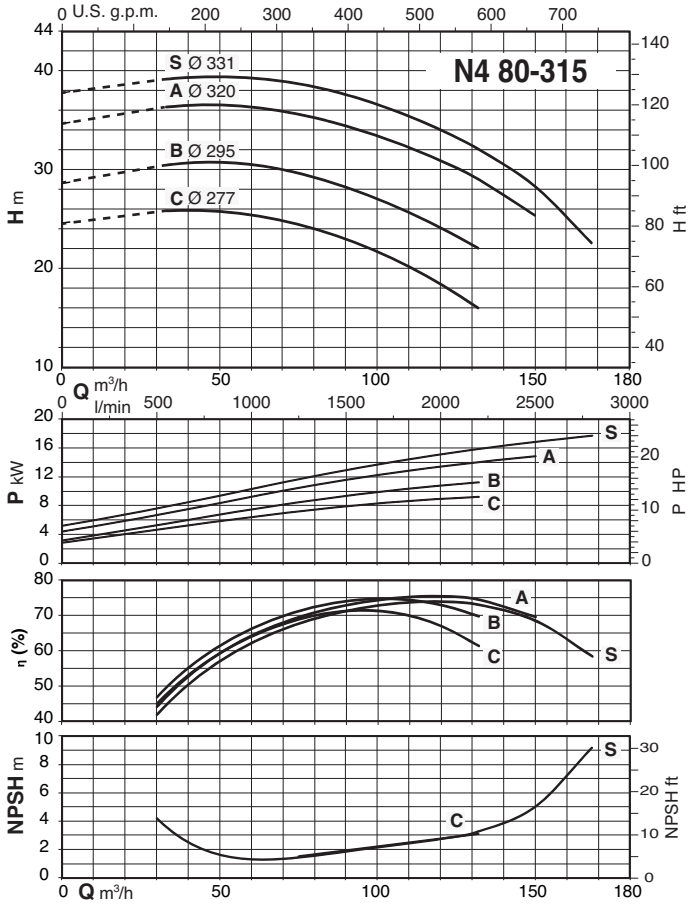

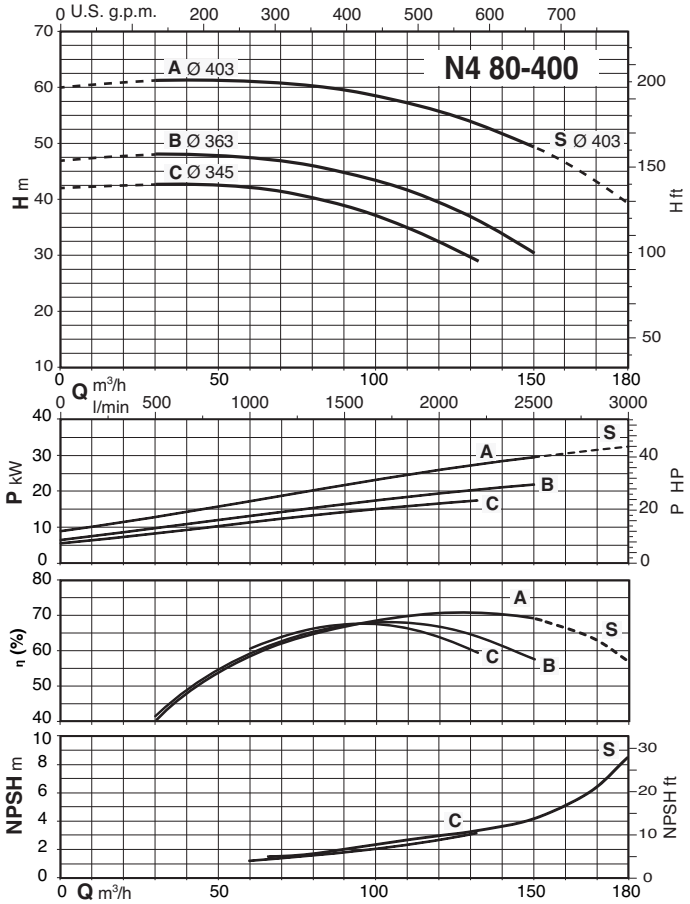

CALPEDA ROMANIA - INFINITY PUMPS SRL
Tel: 0268.33.47.47 / 0722.244.944
vanzari@calpeda.ro | www.calpeda.ro

N4 End-Suction Centrifugal Pumps
standardized EN 733

Characteristic curves n ≈ 1450 rpm

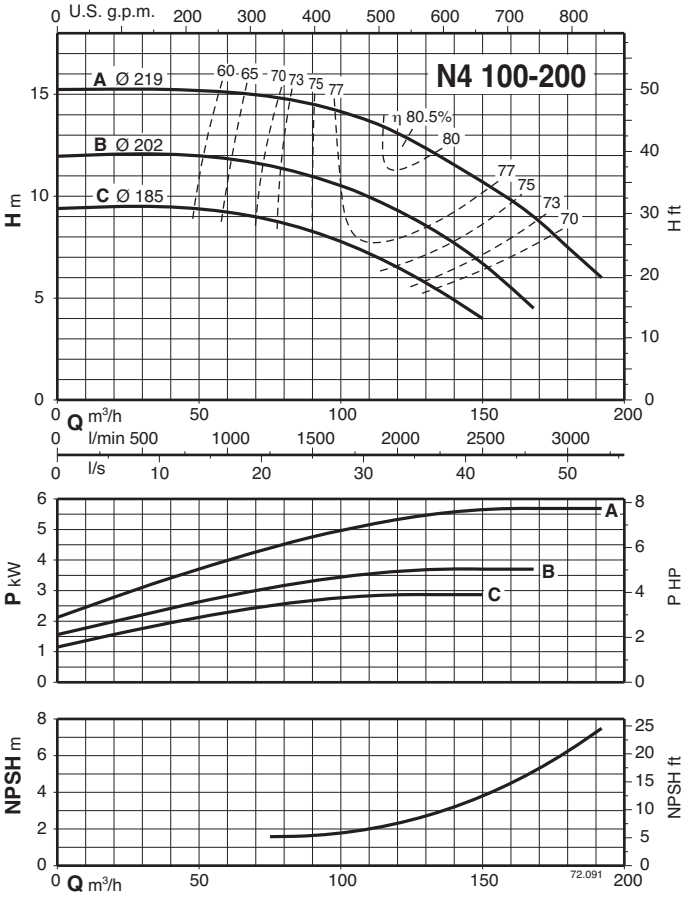

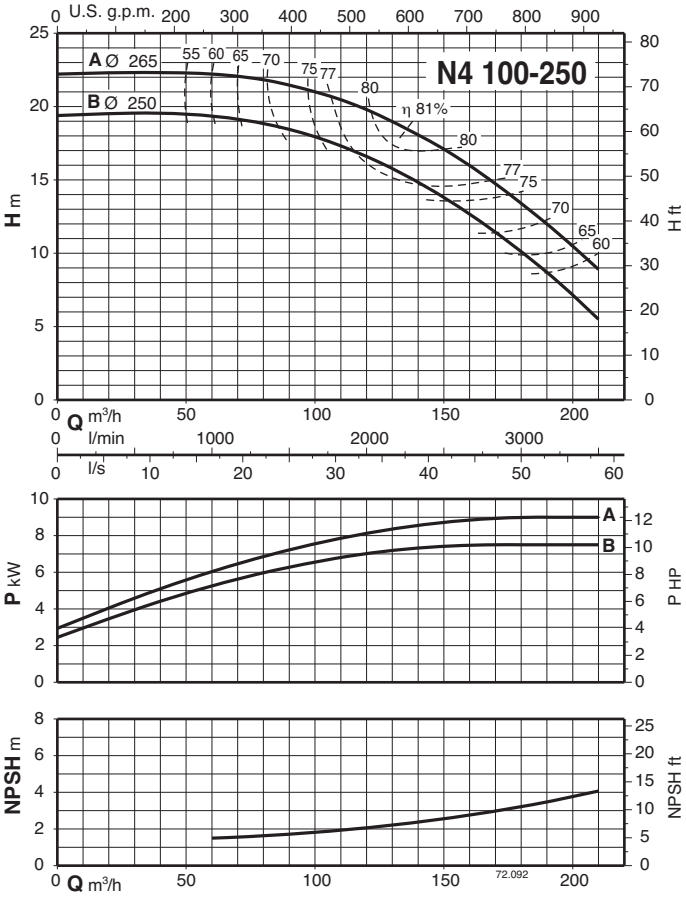

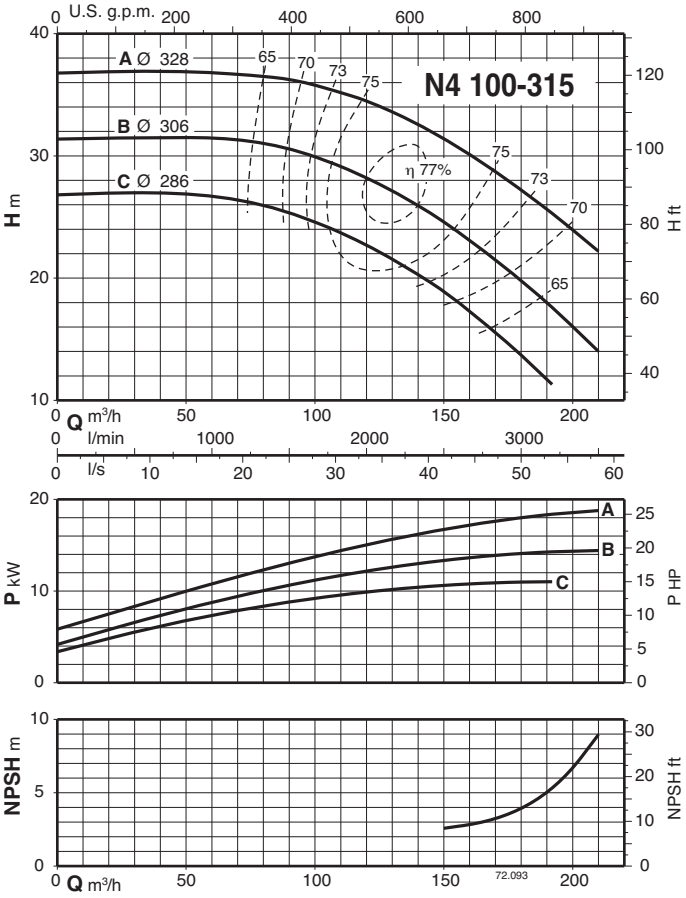

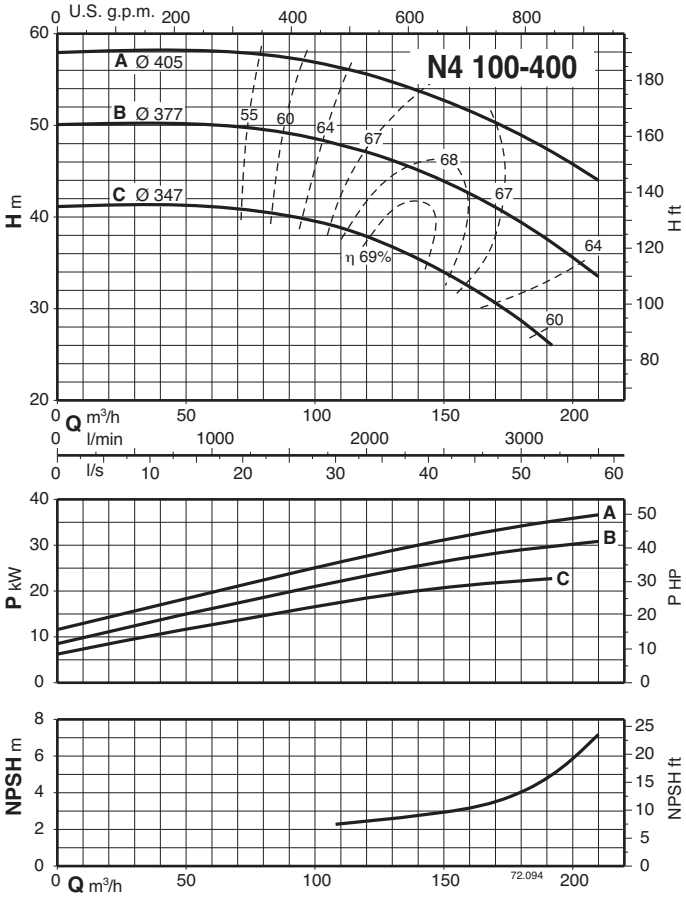

CALPEDA ROMANIA - INFINITY PUMPS SRL
Tel: 0268.33.47.47 / 0722.244.944
vanzari@calpeda.ro | www.calpeda.ro

N4 End-Suction Centrifugal Pumps
standardized EN 733

Characteristic curves n ≈ 1450 rpm

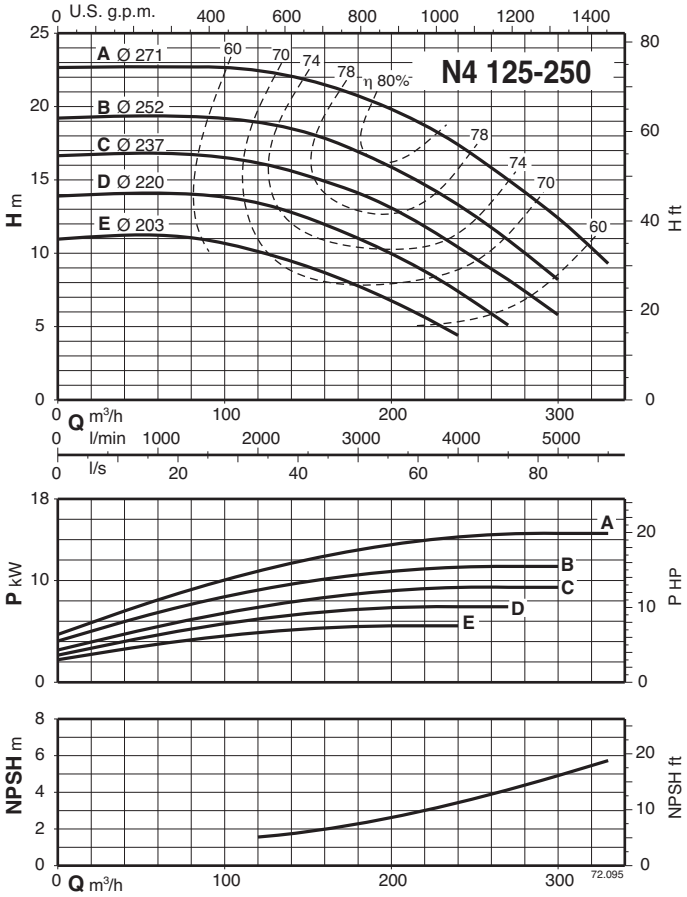

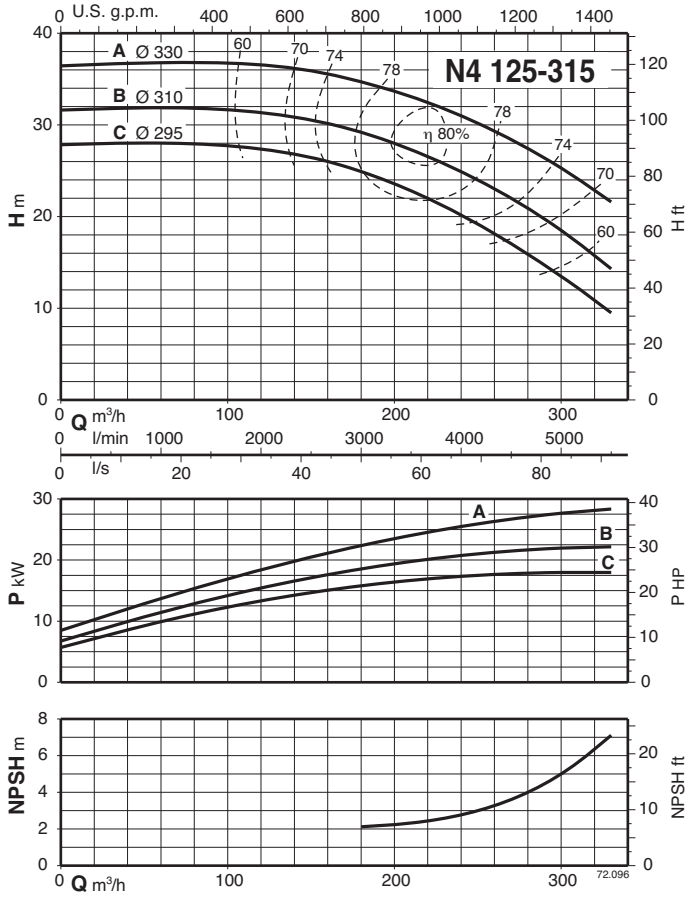

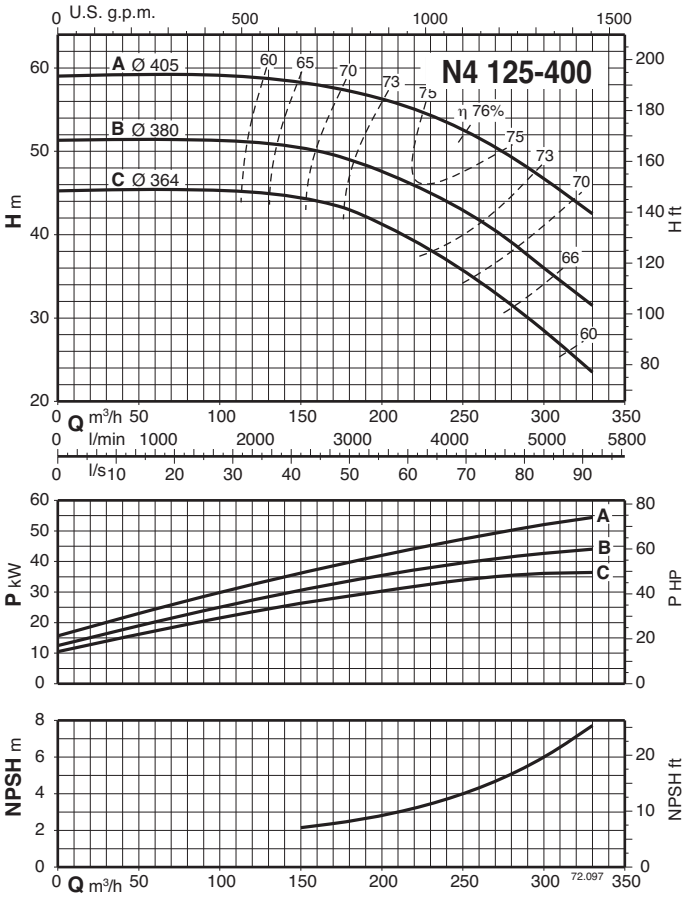

CALPEDA ROMANIA - INFINITY PUMPS SRL
Tel: 0268.33.47.47 / 0722.244.944
vanzari@calpeda.ro | www.calpeda.ro

N4 End-Suction Centrifugal Pumps
standardized EN 733

Characteristic curves n ≈ 1450 rpm

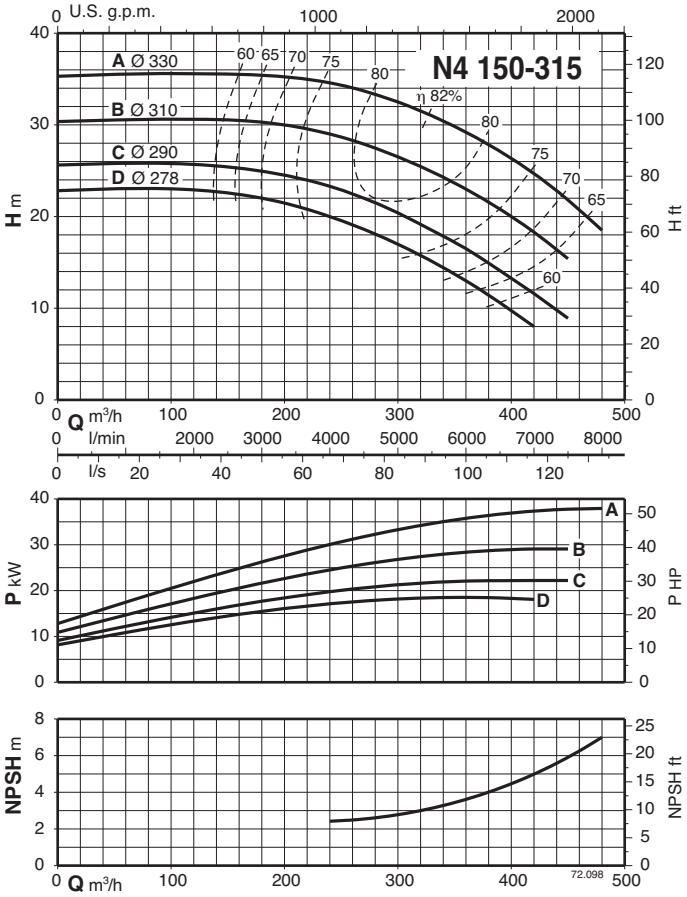

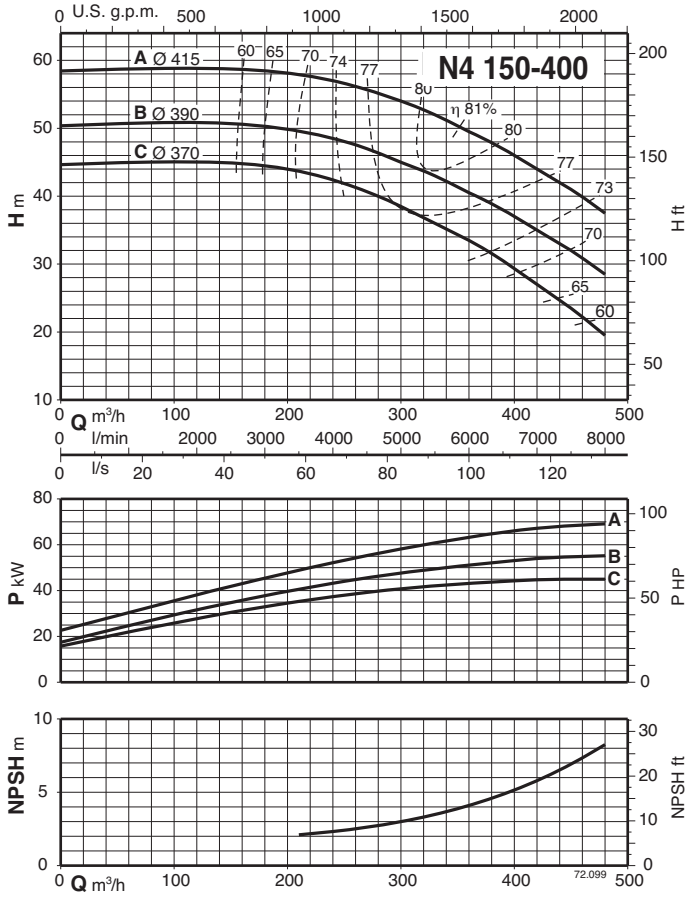

CALPEDA ROMANIA - INFINITY PUMPS SRL
Tel: 0268.33.47.47 / 0722.244.944
vanzari@calpeda.ro | www.calpeda.ro

N, N4

End-Suction Centrifugal Pumps
standardized EN 733

Interchangeability of parts

TYPE	Bearing housing			Pump shaft					Ball bearings				Shaft sealing		
	1	2	3	I	II	III	IV	V	6207 Z 6306 Z	6207 Z 3306	6309 Z 3309	6311 Z 3311	Ø 32	Ø 40	Ø 50
N,N4 32-125	x			x					x				x		
N,N4 32-160	x				x				x				x		
N,N4 32-200	x				x				x				x		
N,N4 40-125	x				x				x				x		
N,N4 40-160	x				x				x				x		
N,N4 40-200C	x				x				x				x		
N,N4 40-200A-AR-B	x					x				x			x		
N,N4 40-250	x					x				x			x		
N,N4 50-125	x				x				x				x		
N,N4 50-160	x					x				x			x		
N,N4 50-200	x					x				x			x		
N,N4 50-250	x					x				x			x		
N,N4 65-125E	x				x				x				x		
N,N4 65-125A-C	x					x				x			x		
N,N4 65-160	x					x				x			x		
N,N4 65-200	x					x				x			x		
N,N4 65-250		x					x				x			x	
N4 65-315		x					x				x			x	
N,N4 80-160	x					x				x			x		
N,N4 80-200		x					x				x			x	
N,N4 80-250		x					x				x			x	
N4 80-315		x					x				x			x	
N4 80-400			x					x				x			x
N,N4 100-200		x					x				x			x	
N,N4 100-250		x					x				x			x	
N4 100-315		x					x				x			x	
N4 100-400			x					x				x			x
N4 125-250		x					x				x			x	
N4 125-315			x					x				x			x
N4 125-400			x					x				x			x
N4 150-315			x					x				x			x
N4 150-400			x					x				x			x

Maximum permissible rotation speed

3600 rpm	**3000** rpm	**1800** rpm
32-125 32-160 32-200 40-125 40-160 40-200 50-125 50-160 50-200 65-125 65-160 80-200 100-200	40-250 50-250 65-200 65-250 80-160 80-250 100-250	65-315 80-315 80-400 100-315 100-400 125-250 125-315 125-400 150-315 150-400

Suction pipe: recommended minimum inside diameter (DN) for different capacities (Q)

Threaded pipe		G 2	G 2½							
DN	mm	50	65	80	100	125	150	200	250	300
Q max	m³/h	10,5	19	28,8	45	75	108	215	350	508

CALPEDA ROMANIA - INFINITY PUMPS SRL
Tel: 0268.33.47.47 / 0722.244.944
vanzari@calpeda.ro | www.calpeda.ro

N, N4

End-Suction Centrifugal Pumps
standardized EN 733

Dimensions and weights

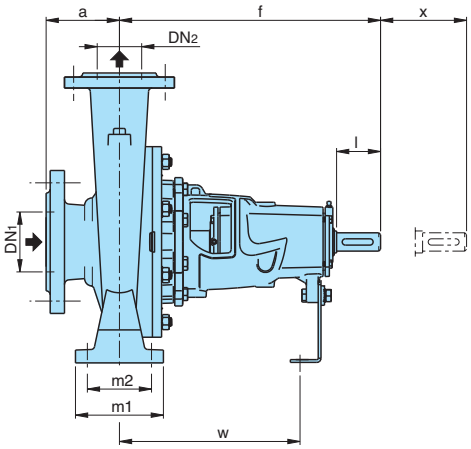

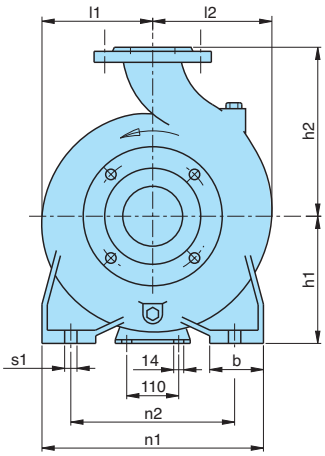

Shaft extension ISO 775 Parallel key UNI 6604

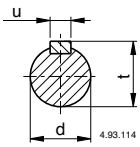

mm			
d	l	u	t
24 j6	50	8	27
32 k6	80	10	35
42 k6	110	12	45

Flanges PN 10, EN 1092-2

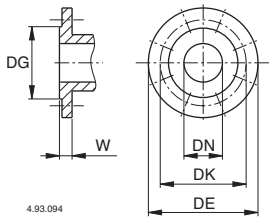

mm						
DN	DG	DK	DE	Holes N°	Holes Ø	W
32	76	100	140	4	19	18
40	84	110	150	4	19	18
50	99	125	165	4	19	20
65	118	145	185	4	19	20
80	132	160	200	8	19	22
100	156	180	220	8	19	24
125	184	210	250	8	19	24
150	211	240	285	8	23	26
200	266	295	340	8	23	30

N n ≈ 2900 rpm
N4 n ≈ 1450 rpm

TYPE	mm																	kg	
	DN1	DN2	a	f	h1	h2	l1	l2	m1	m2	n1	n2	b	s1	d	w	x	B-N B-N4	N N4
B-N, B-N4 - N, N4 32-125	50	32	80	360	112	140	93	97	100	70	190	140	50	14	24	260	100	30	26,5
B-N, B-N4 - N, N4 32-160					132	160	120	120			240	190						37	33
B-N, B-N4 - N, N4 32-200					160	180	140	140										44	38,4
B-N, - N, 40-125	65	40	80	360	112	140	100	113	100	70	210	160	50	14	24	260	100	32	28,4
B-N, B-N4 - N, N4 40-160					132	160	119	119			240	190						38	33,6
B-N, B-N4 - N, N4 40-200			100		160	180	140	140			265	212						47,1	40,4
B-N, B-N4 - N, N4 40-250					180	225	175	175	125	95	320	250	65					63	55
B-N, B-N4 - N, N4 50-125	65	50	100	360	132	160	121	137	100	70	240	190	50	14	24	260	100	42,4	36,5
B-N, B-N4 - N, N4 50-160					160	180	127	141			265	212						45	39,2
B-N, B-N4 - N, N4 50-200						200	140	153										54	47
B-N, B-N4 - N, N4 50-250					180	225	175	175	125	95	320	250	65					66	57,5
B-N, B-N4 - N, N4 65-125	80	65	100	360	160	180	134	155	125	95	280	212	65	14	24	260	100	48	38,7
B-N, B-N4 - N, N4 65-160						200	150	172										50,6	44,5
B-N, B-N4 - N, N4 65-200					180	225	155	175			320	250					140	55,5	50
B-N, B-N4 - N, N4 65-250				470	200	250	175	190	160	120	360	280	80	18	32	340		103	90
B-N4 - N4 65-315			125		225	280	220	220			400	315						149	130
B-N, B-N4 - N, N4 80-160	100	80	125	360	180	225	165	193	125	95	320	250	65	14	24	260	140	61	53
B-N, B-N4 - N, N4 80-200				470		250	170	194			345	280			32	340		93	80,5
B-N, B-N4 - N, N4 80-250					200	280	191	210	160	120	400	315	80	18				110	95
B-N4 - N4 80-315					250	315	220	232										154	134
B-N4 - N4 80-400 (1	125	80	125	530	280	355	268	268	160	120	435	355	80	18	42	370	140	220	192
B-N, B-N4 - N, N4 100-200	125	100	125	470	200	280	180	212	160	120	360	280	80	18	32	340	140	103	89
B-N, B-N4 - N, N4 100-250			140		225		205	233			400	315						123	104
B-N4 - N4 100-315					250	315	230	250										158	138
B-N4 - N4 100-400				530	280	355	268	280	200	150	500	400	100	22	42	370		230	200
B-N4 - N4 125-250	150	125	140	470	250	355	235	268	160	120	400	315	80	18	32	340	140	150	129
B-N4 - N4 125-315				530	280		247	278	200	150	500	400	100	22	42	370		217	189
B-N4 - N4 125-400					315	400	280	305										255	222
B-N4 - N4 150-315	200	150	160	530	280	400	260	298	200	150	550	450	100	22	42	370	140	231	201
B-N4 - N4 150-400					315	450	295	328										284	247

1) Additional size

CALPEDA ROMANIA - INFINITY PUMPS SRL
Tel: 0268.33.47.47 / 0722.244.944
vanzari@calpeda.ro | www.calpeda.ro

N End-Suction Centrifugal Pumps standardized EN 733

Dimensions

n ≈ 2900 rpm

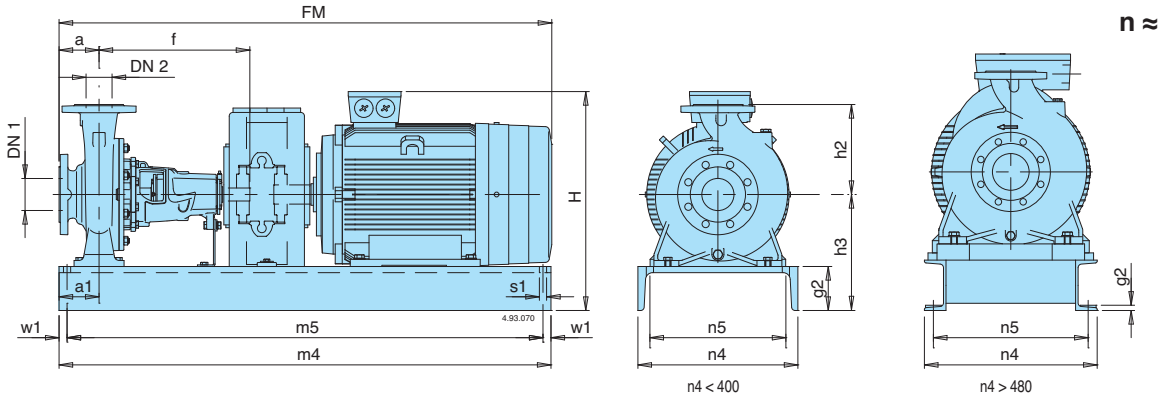

TYPE	MOTOR	kW	mm															
			DN1	DN2	a	f	h3	h2	m4	m5	w1	n4	n5	a1	g2	s1	FM≈	H ≈
B-N, N 32-125	71 M2	0,55	50	32	80	360	197	140	780	750	15	240	180	90	85	14	718	308
	80 M2	0,75	50	32	80	360	197	140	780	750	15	240	180	90	85	14	770	319
	80 M2	1,1	50	32	80	360	197	140	780	750	15	240	180	90	85	14	770	319
	90 S2	1,5	50	32	80	360	197	140	780	750	15	240	180	90	85	14	825	323
B-N, N 32-160	90 S2	1,5	50	32	80	360	217	160	780	750	15	240	180	90	85	14	825	343
	90 L2	2,2	50	32	80	360	217	160	780	750	15	240	180	90	85	14	865	343
	100 L2	3	50	32	80	360	232	160	880	850	15	300	240	90	100	14	920	398
B-N, N 32-200	90 L2	2,2	50	32	80	360	245	180	780	750	15	240	180	90	85	14	865	371
	100 L2	3	50	32	80	360	260	180	880	850	15	300	240	90	100	14	920	426
	112 M2	4	50	32	80	360	260	180	880	850	15	300	240	90	100	14	903	437
	132 S2	5,5	50	32	80	360	260	180	1020	990	15	350	290	100	100	14	954	462
B-N, N 40-125	80 M2	1,1	65	40	80	360	197	140	780	750	15	240	180	90	85	14	770	319
	90 S2	1,5	65	40	80	360	197	140	780	750	15	240	180	90	85	14	825	323
	90 L2	2,2	65	40	80	360	197	140	780	750	15	240	180	90	85	14	865	323
B-N, N 40-160	90 L2	2,2	65	40	80	360	217	160	780	750	15	240	180	90	85	14	865	343
	100 L2	3	65	40	80	360	232	160	880	850	15	300	240	90	100	14	920	398
	112 M2	4	65	40	80	360	232	160	880	850	15	300	240	90	100	14	903	409
	132 S2	5,5	65	40	80	360	232	160	1020	990	15	350	290	90	100	14	953	434
B-N, N 40-200	112 M2	4	65	40	100	360	260	180	880	850	15	300	240	100	100	14	923	437
	132 S2	5,5	65	40	100	360	260	180	1020	990	15	350	290	100	100	14	973	462
	132 S2	7,5	65	40	100	360	260	180	1020	990	15	350	290	100	100	14	973	462
B-N, N 40-250	160 M2	11	65	40	100	360	280	225	1020	990	15	350	290	100	100	14	1082	517
	160 M2	15	65	40	100	360	280	225	1020	990	15	350	290	100	100	14	1082	517
B-N, N 50-125	90 L2	2,2	65	50	100	360	217	160	780	750	15	240	180	90	85	14	885	343
	100 L2	3	65	50	100	360	232	160	880	850	15	300	240	90	100	14	940	398
	112 M2	4	65	50	100	360	232	160	880	850	15	300	240	90	100	14	923	409
	132 S2	5,5	65	50	100	360	232	160	1020	990	15	350	290	90	100	14	973	434
B-N, N 50-160	132 S2	5,5	65	50	100	360	260	180	1020	990	15	350	290	100	100	14	973	462
	132 S2	7,5	65	50	100	360	260	180	1020	990	15	350	290	100	100	14	973	462
B-N, N 50-200	160 M2	11	65	50	100	360	260	200	1020	990	15	350	290	100	100	14	1082	497
	160 M2	15	65	50	100	360	260	200	1020	990	15	350	290	100	100	14	1082	497
B-N, N 50-250	160 M2	11	65	50	100	360	280	225	1020	990	15	350	290	100	100	14	1082	517
	160 M2	15	65	50	100	360	280	225	1020	990	15	350	290	100	100	14	1082	517
	160 L2	18,5	65	50	100	360	280	225	1020	990	15	350	290	100	100	14	1142	517
	180 M2	22	65	50	100	360	280	225	1140	1110	15	350	290	100	100	14	1218	566
B-N, N 65-125	112 M2	4	80	65	100	360	260	180	880	850	15	300	240	100	100	14	923	437
	132 S2	5,5	80	65	100	360	260	180	1020	990	15	350	290	100	100	14	973	462
	132 S2	7,5	80	65	100	360	260	180	1020	990	15	350	290	100	100	14	973	462
B-N, N 65-160	132 S2	5,5	80	65	100	360	260	200	1020	990	15	350	290	100	100	14	973	462
	132 S2	7,5	80	65	100	360	260	200	1020	990	15	350	290	100	100	14	973	462
	160 M2	11	80	65	100	360	260	200	1020	990	15	350	290	100	100	14	1112	497
	160 M2	15	80	65	100	360	260	200	1020	990	15	350	290	100	100	14	1082	497
B-N, N 65-200	160 M2	15	80	65	100	360	280	225	1020	990	15	350	290	100	100	14	1082	517
	160 L2	18,5	80	65	100	360	280	225	1020	990	15	350	290	100	100	14	1142	517
	180 M2	22	80	65	100	360	280	225	1140	1110	15	350	290	100	100	14	1218	566
B-N, N 65-250	180 M2	22	80	65	100	470	310	250	1360	1320	20	400	340	130	110	18	1328	596
	200 L2	30	80	65	100	470	310	250	1360	1320	20	400	340	130	110	18	1348	625
	200 L2	37	80	65	100	470	310	250	1360	1320	20	400	340	130	110	18	1348	625
B-N, N 80-160	132 S2	7,5	100	80	125	360	280	225	1020	990	15	350	290	100	100	14	998	482
	160 M2	11	100	80	125	360	280	225	1020	990	15	350	290	100	100	14	1107	517
	160 M2	15	100	80	125	360	280	225	1020	990	15	350	290	100	100	14	1107	517
	160 L2	18,5	100	80	125	360	280	225	1020	990	15	350	290	100	100	14	1167	517
B-N, N 80-200	180 M2	22	100	80	125	470	290	250	1230	1190	20	400	340	100	110	18	1353	576
	200 L2	30	100	80	125	470	310	250	1360	1320	20	400	340	130	110	18	1373	625
B-N, N 80-250	180 M2	22	100	80	125	470	310	280	1360	1320	20	400	340	130	110	18	1353	596
	200 L2	30	100	80	125	470	310	280	1360	1320	20	400	340	130	110	18	1373	625
	200 L2	37	100	80	125	470	310	280	1360	1320	20	400	340	130	110	18	1373	625
B-N, N 80-250	225 M2	45	100	80	125	470	385	280	1250	840	205	480	430	95	16	24	1470	723
	250 M2	55	100	80	125	470	415	280	1250	840	205	480	430	95	16	24	1509	825
B-N, N 100-200	160 L2	18,5	125	100	125	470	310	280	1230	1190	20	400	340	130	110	18	1263	547
	180 M2	22	125	100	125	470	310	280	1360	1320	20	400	340	130	110	18	1353	596
	200 L2	30	125	100	125	470	310	280	1360	1320	20	400	340	130	110	18	1373	625
	200 L2	37	125	100	125	470	310	280	1360	1320	20	400	340	130	110	18	1373	625
B-N, N 100-200	225 M2	45	125	100	125	470	385	280	1250	840	205	480	430	95	16	24	1470	723
B-N, N 100-250	250 M2	55	125	100	140	470	415	280	1250	840	205	480	430	95	16	24	1524	825
	280 S2	75	125	100	140	470	505	280	1400	940	230	510	450	95	17,5	24	1597	938

CALPEDA ROMANIA - INFINITY PUMPS SRL
Tel: 0268.33.47.47 / 0722.244.944
vanzari@calpeda.ro | www.calpeda.ro

N4 End-Suction Centrifugal Pumps
standardized EN 733

Dimensions

n ≈ 1450 rpm

TYPE	MOTOR	kW	mm															
			DN1	DN2	a	f	h3	h2	m4	m5	w1	n4	n5	a1	g2	s1	fM≈	H≈
B-N4, N4 32-125	71 M4	0,25	50	32	80	360	197	140	780	750	15	240	180	90	85	14	718	308
B-N4, N4 32-160	71 M4	0,37	50	32	80	360	217	160	780	750	15	240	180	90	85	14	718	328
B-N4, N4 32-200	80 M4	0,55	50	32	80	360	245	180	780	750	15	240	180	90	85	14	770	367
	80 M4	0,75	50	32	80	360	245	180	780	750	15	240	180	90	85	14	770	367
B-N4, N4 40-125	71 M4	0,25	65	40	80	360	197	140	780	750	15	240	180	90	85	14	718	308
	71 M4	0,37	65	40	80	360	197	140	780	750	15	240	180	90	85	14	718	308
B-N4, N4 40-160	71 M4	0,37	65	40	80	360	217	160	780	750	15	240	180	90	85	14	718	328
	80 M4	0,55	65	40	80	360	217	160	780	750	15	240	180	90	85	14	770	339
	80 M4	0,75	65	40	80	360	217	160	780	750	15	240	180	90	85	14	770	339
B-N4, N4 40-200	90 S4	1,1	65	40	100	360	260	180	880	850	15	300	240	100	100	14	845	386
B-N4, N4 40-250	90 L4	1,5	65	40	100	360	280	225	880	850	15	350	290	100	100	14	885	406
	100 L4	2,2	65	40	100	360	280	225	880	850	15	350	290	100	100	14	929	446
	100 L4	3	65	40	100	360	280	225	880	850	15	350	290	100	100	14	929	446
B-N4, N4 50-125	71 M4	0,37	65	50	100	360	217	160	780	750	15	240	180	90	85	14	738	328
	80 M4	0,55	65	50	100	360	217	160	780	750	15	240	180	90	85	14	790	339
	80 M4	0,75	65	50	100	360	217	160	780	750	15	240	180	90	85	14	790	339
B-N4, N4 50-160	90 S4	1,1	65	50	100	360	260	180	880	850	15	300	240	100	100	14	845	386
B-N4, N4 50-200	90 S4	1,1	65	50	100	360	260	200	880	850	15	300	240	100	100	14	845	386
	90 L4	1,5	65	50	100	360	260	200	880	850	15	300	240	100	100	14	885	386
	100 L4	2,2	65	50	100	360	260	200	880	850	15	300	240	100	100	14	929	426
B-N4, N4 50-250	100 L4	2,2	65	50	100	360	280	225	880	850	15	350	290	100	100	14	929	446
	100 L4	3	65	50	100	360	280	225	880	850	15	350	290	100	100	14	929	446
	112 M4	4	65	50	100	360	280	225	880	850	15	350	290	100	100	14	912	457
B-N4, N4 65-125	80 M4	0,75	80	65	100	360	260	180	880	850	15	300	240	100	100	14	790	382
	90 S4	1,1	80	65	100	360	260	180	880	850	15	300	240	100	100	14	845	386
B-N4, N4 65-160	90 S4	1,1	80	65	100	360	260	200	880	850	15	300	240	100	100	14	845	386
	90 L4	1,5	80	65	100	360	260	200	880	850	15	300	240	100	100	14	885	386
	100 L4	2,2	80	65	100	360	260	200	880	850	15	350	290	100	100	14	929	426
B-N4, N4 65-200	100 L4	2,2	80	65	100	360	280	225	880	850	15	350	290	100	100	14	929	446
	100 L4	3	80	65	100	360	280	225	880	850	15	350	290	100	100	14	929	446
B-N4, N4 65-250	112 M4	4	80	65	100	470	310	250	1030	990	20	400	340	130	110	18	1022	487
	132 S4	5,5	80	65	100	470	310	250	1030	990	20	400	340	130	110	18	1123	512
B-N4, N4 65-315	132 S4	5,5	80	65	125	470	335	280	1030	990	20	400	340	130	110	18	1148	537
	132 M4	7,5	80	65	125	470	335	280	1030	990	20	400	340	130	110	18	1148	537
	160 M4	11	80	65	125	470	335	280	1230	1190	20	400	340	130	110	18	1237	572
B-N4, N4 80-160	90 S4	1,1	100	80	125	360	280	225	880	850	15	350	290	100	100	14	870	406
	90 L4	1,5	100	80	125	360	280	225	880	850	15	350	290	100	100	14	910	406
	100 L4	2,2	100	80	125	360	280	225	880	850	15	350	290	100	100	14	954	446
B-N4, N4 80-200	100 L4	2,2	100	80	125	470	280	250	1020	990	15	350	290	100	100	14	1064	446
	100 L4	3	100	80	125	470	280	250	1020	990	15	350	290	100	100	14	1064	446
	112 M4	4	100	80	125	470	280	250	1020	990	15	350	290	100	100	14	1047	457
B-N4, N4 80-250	112 M4	4	100	80	125	470	310	280	1030	990	20	400	340	130	110	18	1047	487
	132 S4	5,5	100	80	125	470	310	280	1030	990	20	400	340	130	110	18	1148	512
	132 M4	7,5	100	80	125	470	310	280	1030	990	20	400	340	130	110	18	1148	512
B-N4, N4 80-315	160 M4	11	100	80	125	470	360	315	1230	1190	20	400	340	130	110	18	1237	597
	160 L4	15	100	80	125	470	360	315	1230	1190	20	400	340	130	110	18	1297	597
	180 M4	18,5	100	80	125	470	360	315	1360	1320	20	400	340	130	110	18	1301	646
B-N4, N4 80-400	180 M4	18,5	125	80	125	530	445	355	1250	840	205	480	430	115	16	24	1361	731
	180 L4	22	125	80	125	530	445	355	1250	840	205	480	430	115	16	24	1391	760
	200 L4	30	125	80	125	530	445	355	1250	840	205	480	430	115	16	24	1439	760
	225 S4	37	125	80	125	530	445	355	1250	840	205	480	430	115	16	24	1481	783
B-N4, N4 100-200	100 L4	3	125	100	125	470	310	280	1030	990	20	400	340	130	110	18	1064	476
	112 M4	4	125	100	125	470	310	280	1030	990	20	400	340	130	110	18	1047	487
	132 S4	5,5	125	100	125	470	310	280	1030	990	20	400	340	130	110	18	1148	512
B-N4, N4 100-250	132 M4	7,5	125	100	140	470	335	280	1030	990	20	400	340	130	110	18	1163	537
	160 M4	11	125	100	140	470	335	280	1230	1190	20	400	340	130	110	18	1252	572
B-N4, N4 100-315	160 M4	11	125	100	140	470	360	315	1230	1190	20	400	340	130	110	18	1252	597
	160 L4	15	125	100	140	470	360	315	1230	1190	20	400	340	130	110	18	1312	597
	180 M4	18,5	125	100	140	470	360	315	1360	1320	20	400	340	130	110	18	1316	646
B-N4, N4 100-400	180 L4	22	125	100	140	530	445	355	1250	840	205	480	430	115	16	24	1406	760
	200 L4	30	125	100	140	530	445	355	1250	840	205	480	430	115	16	24	1454	760
	225 S4	37	125	100	140	530	445	355	1250	840	205	480	430	115	16	24	1496	783
B-N4, N4 125-250	132 S4	5,5	150	125	140	470	360	355	1030	990	20	400	340	130	110	18	1163	562
	132 M4	7,5	150	125	140	470	360	355	1030	990	20	400	340	130	110	18	1163	562
	160 M4	11	150	125	140	470	360	355	1230	1190	20	400	340	130	110	18	1252	597
	160 L4	15	150	125	140	470	360	355	1230	1190	20	400	340	130	110	18	1312	597
B-N4, N4 125-315	180 M4	18,5	150	125	140	530	445	355	1250	840	205	480	430	115	16	24	1376	731
	180 L4	22	150	125	140	530	445	355	1250	840	205	480	430	115	16	24	1406	760
	200 L4	30	150	125	140	530	445	355	1250	840	205	480	430	115	16	24	1454	760
B-N4, N4 125-400	225 S4	37	150	125	140	530	480	400	1250	840	205	480	430	115	16	24	1496	818
	225 M4	45	150	125	140	530	480	400	1250	840	205	480	430	115	16	24	1556	818
	250 M4	55	150	125	140	530	540	400	1400	940	230	510	450	115	17,5	24	1595	950
B-N4, N4 150-315	180 M4	18,5	200	150	160	530	445	400	1250	840	205	480	430	115	16	24	1396	731
	180 L4	22	200	150	160	530	445	400	1250	840	205	480	430	115	16	24	1426	760
	200 L4	30	200	150	160	530	445	400	1250	840	205	480	430	115	16	24	1474	760
	225 S4	37	200	150	160	530	445	400	1250	840	205	480	430	115	16	24	1516	783
B-N4, N4 150-400	225 M4	45	200	150	160	530	480	450	1250	840	205	480	430	115	16	24	1576	818
	250 M4	55	200	150	160	530	540	450	1400	940	230	510	450	115	17,5	24	1615	950
	280 S4	75	200	150	160	530	540	450	1400	940	230	510	450	115	17,5	24	1688	973

CALPEDA ROMANIA - INFINITY PUMPS SRL
Tel: 0268.33.47.47 / 0722.244.944
vanzari@calpeda.ro | www.calpeda.ro

N, N4

End-Suction Centrifugal Pumps
standardized EN 733

Features

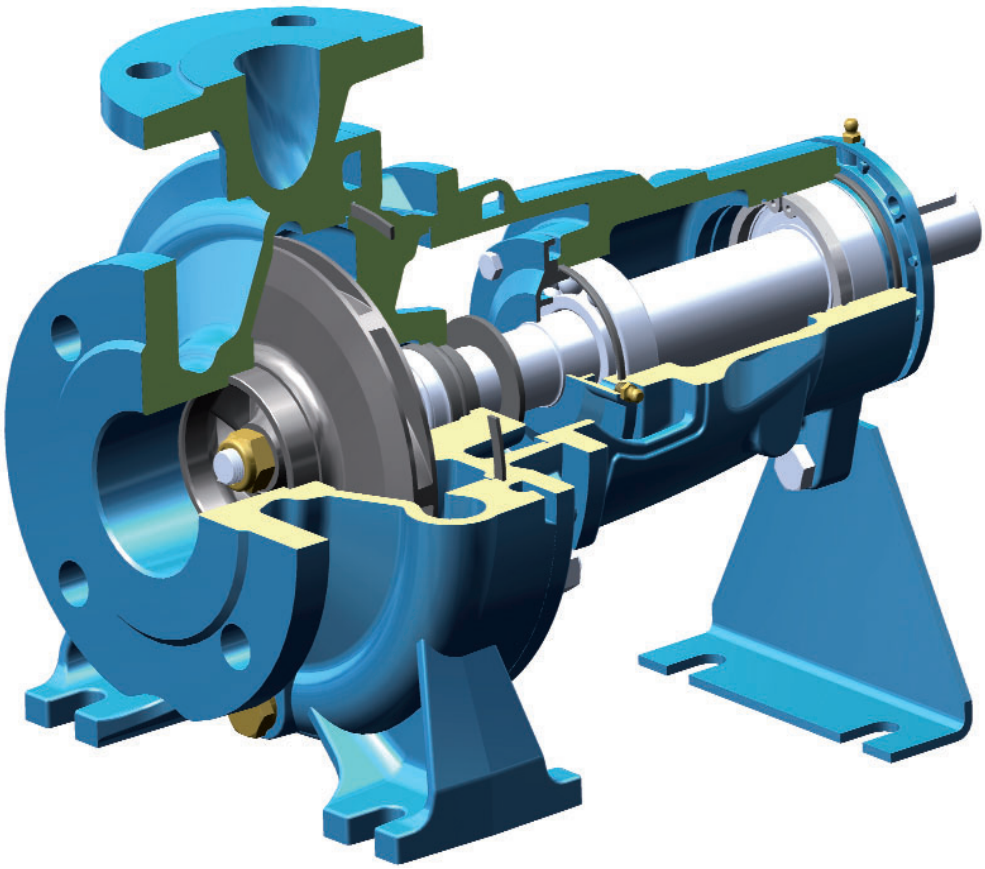

Cutting edge hydraulics
The geometry of the impeller and the pump casing are optimized to achieve maximum efficiency and the best suction capability.

Flexible
The option to choose between cast iron and bronze materias for the hydraulic parts in contact with the pumped liquid allows N-N4 series pumps to be selected for use with different types of liquids.

Robust
The mechanical structure of the hydraulic parts in contact with the pumped liquid are dimensioned to guarantee the maximum resistence to mechanical stress. Also the casing cover is provided with wings that prevent turbulence in the area of the mechanical sea, increasing the reliability.

Reliable
The bearing and shaft are designed to ensure the reduction of the stress, providing high reliability under all operating conditions.

CALPEDA ROMANIA - INFINITY PUMPS SRL
Tel: 0268.33.47.47 / 0722.244.944
vanzari@calpeda.ro | www.calpeda.ro

NR,NR4

In-line Pumps

n ≈ 2900 rpm
n ≈ 1450 rpm

Construction

Close-coupled, single-impeller, centrifugal pumps; electric motor with extended shaft directly connected to the pump.
Pump casing with suction and delivery connections with the same diameter and on the same axis (in-line).

Connections: Flanges PN 10, EN 1092-2.

Counterflanges (on request)

Sizes	Flanges
NR,NR4 32,40,50,65	Screwed flanges PN 16, EN 1092-1
NR4 100, NR4 125	Flanges for welding PN 10, EN 1092-1

Version with frequency converter (on request)

Applications

For clean liquids, without abrasives, which are non-aggressive for the pump materials (contents of solids up to 0.2%).
For heating, conditioning, cooling and circulation plants.
For civil and industrial applications.
When low noise operation is required (n ≈ 1450 rpm).

Operating conditions

Liquid temperature from -10 °C to +90 °C.
Ambient temperature up to 40 °C.
Total suction lift up to 7 m.
Maximum permissible working pressure up to 10 bar.
Continuous duty.

The electropumps NR, NR4 series comply with the European Regulation no. 547/2012.

Materials

Component	Material
Pump casing Lantern bracket	Cast iron GJL 200 EN 1561
Impeller	Cast iron GJL 200 EN 1561 (Brass P-Cu Zn Pb 2 EN 1982 for NR-NR4 32,40,50)
Shaft	Chrome-nickel steel AISI 303 for pumps up to 1.1 kW Chrome steel AISI 430 for pumps from 1.5 to 18,5 kW
Mecanical seal	Carbon - Ceramic - NBR
Counterflanges	Steel Fe 42 UNI 7070

Special features on request

- Other voltages. - Protection IP 55. - Frequency 60 Hz
- Special mechanical seal. - Higher or lower liquid or ambient temperatures.
- Motor suitable for operation with frequency converter up to 0,55 kW for NR4 and up to 0,75 kW for NR.

Motor

2-pole induction motor, 50 Hz (n ≈ 2900 rpm).
NR : three-phase 230/400 V ± 10% up to 3 kW;
400/690 V ± 10% from 4 to 18,5 kW.
NRM : single-phase 230 V ± 10%.
4-pole induction motor, 50 Hz (n ≈ 1450 rpm).
NR4: three-phase 230/400 V ± 10% up to 3 kW;
400/690 V ± 10% for 4 kW.
NRM4: single-phase 230 V ± 10%.
Insulation class F.
Protection IP 54.
Motor suitable for operation with frequency converter from 0,75 kW for NR4 and from 1,1 kW for NR.
Classification scheme IE3 for three-phase motors from 0,75 kW.
Constructed in accordance with EN 60034-1, EN 60034-30-1.
EN 60335-1, EN 60335-2-41.

Coverage chart

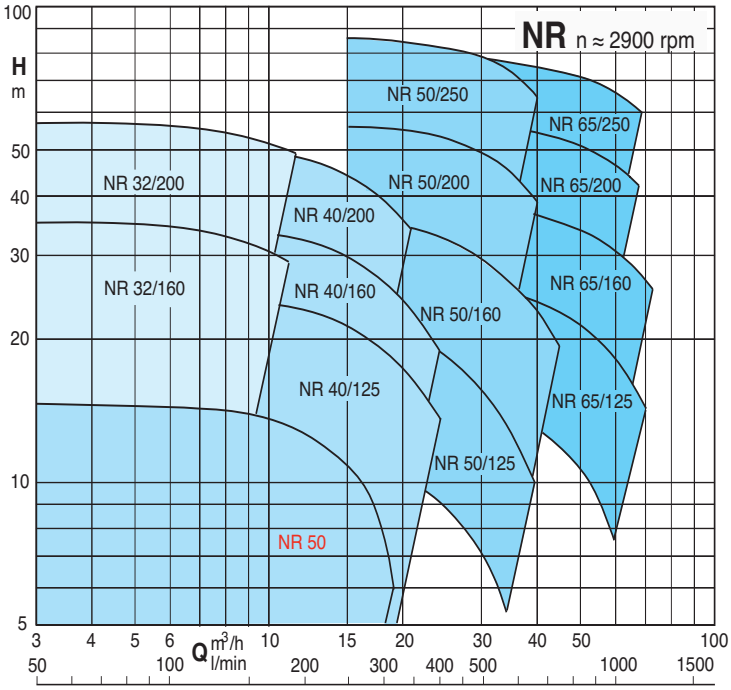

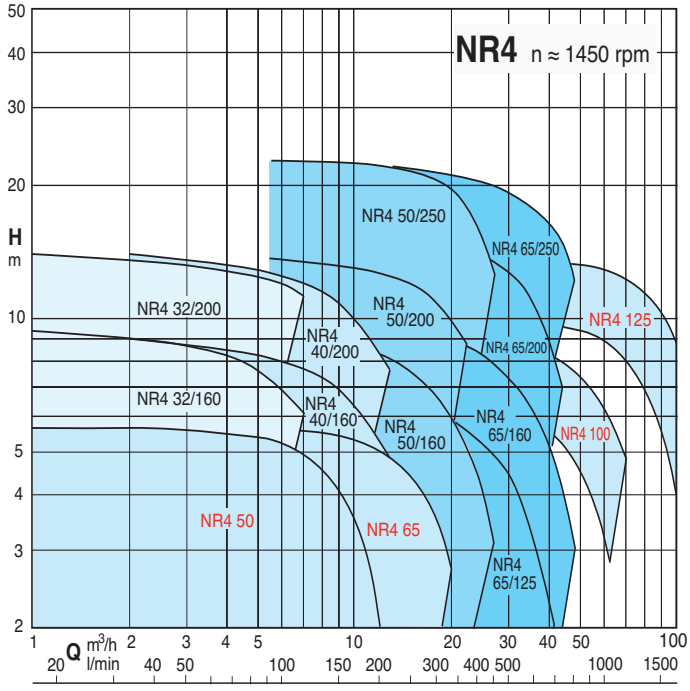

CALPEDA ROMANIA - INFINITY PUMPS SRL
Tel: 0268.33.47.47 / 0722.244.944
vanzari@calpeda.ro | www.calpeda.ro

NR EI, NR4 EI

In-line Pumps

Pumps with frequency converter

The **NR EI, NR4 EI,** pumps are available with power from 0,25 kW up to 18,5 kW, the pumps are equipped with **I-MAT** installed on board which allows to realize a variable-speed system extremely compact and efficient, ideal in applications of water supply and in the distribution of hot and cold water.
The pump is equipped with transducers suitable for operation and is already programmed at the factory.

Advantages
- Energy saving
- Compact design
- Easy to use
- Programmable to suit the system requirements
- Reliability

Costruction
The system comprises of:
- Pump
- Induction motor
- I-MAT Frequency converter
- Motor adapter for the motor mounting of the frequency converter
- Connection cable between frequency converter and induction motor
- Transducers

Main features
Rated motor power output from 0,25 kW to 18,5 kW
Control range from 1750 to 2900 rpm (2-pole)
Control range from 870 to 1450 rpm (4-pole)
Protection against dry running
Protection against operations with closed valve ports
Protection against system leakages
Protection against overcurrent in the motor
Protection agains overvoltage and undervoltage of the power supply
Protection against current unbalances between phases

Operating modes

Constant pressure mode
with pressure transducer

In this mode, the system maintains the preset pressure when the flow required by the installation changes.

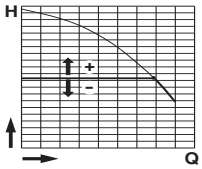

Proportional pressure mode
with pressure transducer

In this mode the system changes the working pressure according to the required flow rate.

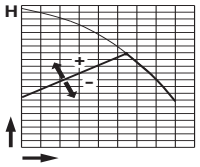

Constant flow mode
with flow meter

In this mode the system maintains a constant flow rate value in a point of the installation according to the required pressure.

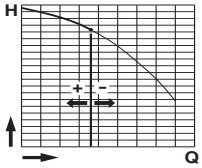

Fixed speed mode
with setting of the speed preferential rotation.

In this mode, by changing the working frequency, you may choose any operational curve included within the working range.

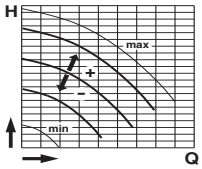

Constant temperature mode
with temperature transducer

In this mode the system keeps the temperature constant inside a system by changing the speed of the pump.

CALPEDA ROMANIA - INFINITY PUMPS SRL
Tel: 0268.33.47.47 / 0722.244.944
vanzari@calpeda.ro | www.calpeda.ro

NR

In-line Pumps

calpeda®

Performance n ≈ 2900 rpm

3 ~	230V	400V	1 ~	230V	P_1	P_2		Q m^3/h	0	6	6,6	7,5	8,4	9,6	10,8	12	13,2	15	16,8	18,9
	A	A		A	kW	kW	HP	l/min	0	100	110	125	140	160	180	200	220	250	280	315
NR 50D/A	2,3	1,3	NRM 50D/A	3,6	0,72	0,45	0,6	H	11,6	11	10,8	10,5	10,2	9,5	8,5	7	6			
NR 50C/B	3,7	2,2	NRM 50C/A	5,7	1,13	0,75	1	m	16,2	16	15,9	15,8	15,7	15,3	14,6	14	13	11	9	5,5

3 ~	230V	400V	P_2		Q m^3/h	0	2,4	3	3,6	4,8	6	6,6	7,5	8,4	9,6	10,8	12	13,2	15	16,8
	A	A	kW	HP	l/min	0	40	50	60	80	100	110	125	140	160	180	200	220	250	280
NR 32/160B/A	4,6	2,7	1,1	1,5		28,1	27,9	27,6	27,3	26,5	25,6	25,1	24,3	23,4	21,9	20				
NR 32/160A/A	7,5	4,3	1,5	2	H	36,8	36,3	36,1	35,7	35	34,3	33,8	33,2	32,4	31,2	29,7				
NR 32/200B/A	9,2	5,3	2,2	3	m	42,5		41,6	41,3	40,6	39,8	39,3	38,5	37,7	36,5	35,1	33,4			
NR 32/200A	11,5	6,6	3	4		51,2		49,7	49,5	48,9	48,2	47,9	47,2	46,5	45,4	44,2	42,8	41,2	37,9	
NR 32/200S/A		9,4	4	5,5		58		57,4	57,2	56,7	56,1	55,8	55,1	54,4	53,3	52	50,5	48,8	45,9	42,6

3 ~	230V	400V	P_2		Q m^3/h	0	6,6	7,5	8,4	9,6	10,8	12	13,2	15	16,8	18,9	21	24
	A	A	kW	HP	l/min	0	110	125	140	160	180	200	220	250	280	315	350	400
NR 40/125C	4	2,3	0,75	1		15,5	15,7	15,5	15,3	14,8	14,3	13,6	12,9	11,6	10,2	8,1	5,8	
NR 40/125B/A	4,6	2,7	1,1	1,5		19,5	19,8	19,6	19,4	19,0	18,5	18,0	17,5	16,5	15,2	13,6	11,6	8,5
NR 40/125A/A	7,5	4,3	1,5	2		23,3	23,7	23,7	23,6	23,4	23,1	22,8	22,4	21,7	20,6	19,1	17,3	14,2
NR 40/160B/A	7,5	4,3	1,5	2	H	26,1	25,7	25,4	25,1	24,6	24,0	23,3	22,6	21,4	19,7	17,3	14,4	9,9
NR 40/160A/A	9,2	5,3	2,2	3	m	33,6	32,9	32,6	32,3	31,8	31,3	30,6	29,9	28,7	27,2	25,2	23,1	19,4
NR 40/200B	11,5	6,6	3	4		41,9	40,2	39,7	39,2	38,5	37,6	36,7	35,7	33,8	31,0	26,9	22,0	
NR 40/200A/A		9,4	4	5,5		52,4	49,6	49,1	48,5	47,6	46,7	45,7	44,7	43,0	41,2	38,6	34,8	

3 ~	230V	400V	P_2		Q m^3/h	0	15	16,8	18,9	21	24	27	30	33	37,8	39	42	45
	A	A	kW	HP	l/min	0	250	280	315	350	400	450	500	550	630	650	700	750
NR 50/125F/A	4,7	2,7	1,1	1,5		14,9	13,8	13,4	12,8	12,1	11	9,9	8,4	6,9				
NR 50/125C/A	7,5	4,3	1,5	2		17,7	17,4	17	16,5	16	15	13,9	12,6	11,3	9	8,3		
NR 50/125A/B	9,2	5,3	2,2	3		22,2	21,7	21,4	21	20,6	19,8	18,8	17,5	16,3	14,1	13,5	12	
NR 50/160C/B	9,2	5,3	2,2	3		23,1	21,9	21,4	20,6	19,9	18,6	17,3	15,6	13,8	10,8	10		
NR 50/160B/A	11,5	6,6	3	4		28,6	27,9	27,4	26,7	26	24,6	23,1	21,3	19,7	16,6	15,7	13,6	
NR 50/160A/B		9,4	4	5,5	H	36,6	35,5	35,1	34,5	33,7	32,7	31,2	29,4	27,5	24,3	23,4	21,3	19,1
NR 50/200D/B		9,4	4	5,5	m	41,8	37,8	36,8	35,7	34,5	32,4	30,1	27,6	24,9				
NR 50/200B/A		10,8	5,5	7,5		50,9	48,5	47,7	46,8	45,7	43,9	41,7	39,2	36,5				
NR 50/200A/A		14,3	7,5	10		56,7	54,9	54,3	53,4	52,4	50,7	48,9	46,5	44,1	39,7	38,8		
NR 50/250C/B		18,5	9,2	12,5		61,2	58,8	58	57,3	56,5	55	53,2	51,1	48,9	44,8	43,1	39,4	
NR 50/250B/B		21,5	11	15		69,4	67	66,4	65,5	64,8	63,2	61,5	59,6	57,7	53,8	52,6	50	
NR 50/250A/B		27,3	15	20		87	84,6	84,1	83,2	82,3	80,7	78,8	76,9	74,3	69,8	68,4	65,2	

3 ~	230V	400V	P_2		Q m^3/h	0	21	24	27	30	33	37,8	42	48	54	60	66	69	72
	A	A	kW	HP	l/min	0	350	400	450	500	550	630	700	800	900	1000	1100	1150	1200
NR 65/125F/B	9,2	5,3	2,2	3		16,5	16	15,7	15,3	14,8	14,3	13,5	12,5	11,1	9,5	7,3	5,3		
NR 65/125D/A	11,5	6,6	3	4		21,1	20,2	19,9	19,6	19,2	18,7	17,9	16,9	15,2	13,3	11,3	9,1		
NR 65/125A/B		9,4	4	5,5		25	24,4	24,1	23,8	23,4	23	22,2	21,4	19,8	18	15,9	13,7	12,4	
NR 65/125S/B		9,4	4	5,5		27,2	26,3	26	25,7	25,4	25	24,3	23,6	22,1	20,3	18,3	16,1	14,7	
NR 65/160B/A		10,8	5,5	7,5		31,9	32	31,7	31,4	30,9	30,4	29,5	28,6	26,8	24,8	22,2	19,7	18,3	16,7
NR 65/160A/A		14,3	7,5	10	H	39	39,3	39	38,7	38,3	37,9	36,9	36,1	34,7	32,9	30,6	28,1	26,7	25,3
NR 65/200B/B		18,5	9,2	12,5	m	47,1	46,7	45,9	45,1	44,4	43,6	42	40,5	37,9	35,3	32,4	28,3		
NR 65/200A/B		21,5	11	15		54,2	53,3	52,8	52,3	51,5	50,7	49,2	47,5	45,1	41,9	38,1	34,5		
NR 65/200S/B		27,5	15	20		60,4	60,5	60,2	59,6	59	58	56,3	54,5	52,2	49,5	46,5	42,7		
NR 65/250C/B		21,5	11	15		54,6	54,8	54,2	53,5	52,8	52	50,5	48,9	46,3	43,5	40,6	37,3		
NR 65/250B/B		27,3	15	20		67,1	67,2	66,7	66	65,1	64,3	62,8	61,3	58,6	55,8	52,9	49,7		
NR 65/250A/C		34	18,5	25		78,5	78,5	77,8	77,3	76,7	76	74,8	73,6	71,1	68,4	65,5	62,2		

P_1 Max. power input. P_2 Rated motor power output. Tolerances according to UNI EN ISO 9906:2012

CALPEDA ROMANIA - INFINITY PUMPS SRL
Tel: 0268.33.47.47 / 0722.244.944
vanzari@calpeda.ro | www.calpeda.ro

NR4 In-line Pumps

Performance n ≈ 1450 rpm

3 ~	230V	400V	1 ~	230V	P1	P2		Q m³/h	0	2	4	6	8	10	12	14	16	18	20	25				
	A	A		A	kW	kW	HP	l/min	0	33	67	100	133	167	200	233	267	300	333	417				
NR4 50C/A	1,4	0,8	NR4M 50C/A	2,1	0,27	0,25	0,34	H m	3,9	3,9	3,8	3,3	2,5											
NR4 50B/A	1,4	0,8	NR4M 50B/A	2,1	0,29	0,25	0,34		4,7	4,7	4,6	4,3	3,5	2,3										
NR4 50A/A	1,4	0,8	NR4M 50A/A	2,1	0,33	0,25	0,34		5,6	5,6	5,5	5,2	4,5	3,5	2									
NR4 65C/A	1,4	0,8	NR4M 65C/A	2,1	0,31	0,25	0,34		3,8			3,8	3,7	3,5	3,1	2,6	1,9							
NR4 65B/A	2,1	1,2				0,37	0,5		4,7			4,7	4,6	4,5	4,2	3,8	3,2	2,5						
NR4 65A/A	2,1	1,2				0,37	0,5		5,6			5,6	5,5	5,3	5	4,6	4,1	3,5	2,7					

3 ~	230V	400V		P2		Q m³/h	0	1	1,2	1,5	1,89	2,4	3	3,6	4,2	4,8	5,4	6	6,6	7,5	8,4	9,6
	A	A		kW	HP	l/min	0	16	20	25	31,5	40	50	60	70	80	90	100	110	125	140	160
NR4 32/160B	1,65	0,95		0,37	0,5	H m	8,1	7,9	7,9	7,7	7,6	7,4	7,2	6,9	6,6	6,1	5,6	4,4				
NR4 32/160A	1,65	0,95		0,37	0,5		9,2	9,3	9,3	9,2	9,1	9	8,8	8,6	8,3	8	7,6	7,2	6,6	5,6		
NR4 32/200C	1,65	0,95		0,37	0,5		11,5	11,3	11,3	11,2	11,1	10,9	10,7	10,5	10,2	9,9	9,5	9,1	8,5	7,4	5,7	
NR4 32/200B	2,6	1,5		0,55	0,75		13,2	13,2	13,2	13,1	13	12,9	12,8	12,6	12,4	12,1	11,8	11,4	10,9	10	9,1	7,5
NR4 32/200A/A	3,3	1,9		0,75	1		14,6	14,5	14,5	14,4	14,3	14,2	14,1	13,9	13,8	13,5	13,2	12,8	12,3	11,4	10,5	9,1

3 ~	230V	400V		P2		Q m³/h	0	2,4	3	3,6	4,8	5,4	6	7,5	8,4	9,6	10,8	12	13,2	15		
	A	A		kW	HP	l/min	0	40	50	60	80	90	100	125	140	160	180	200	220	250		
NR4 40/160B	1,65	0,95		0,37	0,5	H m	7,3	7,3	7,2	7,1	6,9	6,8	6,6	6,1	5,8	5,2	4,4	3,5	2,5			
NR4 40/160A	1,65	0,95		0,37	0,5		9,1	9,0	9,0	9,0	8,8	8,7	8,6	8,1	7,8	7,2	6,5	5,7	4,8	3,3		
NR4 40/200B	2,6	1,5		0,55	0,75		12,9	12,5	12,4	12,2	11,9	11,7	11,4	10,7	10,2	9,1	7,7	6,2	4,4			
NR4 40/200A/A	3,3	1,9		0,75	1		14,7	14,3	14,2	14,1	13,9	13,7	13,5	12,9	12,4	11,6	10,5	9,2	7,7	4,9		

3 ~	230V	400V		P2		Q m³/h	0	5,4	6	7,5	8,4	9,6	10,8	12	13,2	15	16,8	18,9	21	24	27	30
	A	A		kW	HP	l/min	0	90	100	125	140	160	180	200	220	250	280	315	350	400	450	500
NR4 50/160C	1,6	0,92		0,37	0,5	H m	5,9	5,9	5,8	5,7	5,6	5,4	5,2	5	4,7	4,2	3,7	3,1	2,3			
NR4 50/160B	2,6	1,5		0,55	0,75		7,3	7,4	7,4	7,2	7,1	6,9	6,7	6,4	6,2	5,7	5,2	4,5	3,8	2,5		
NR4 50/160A/B	3,3	1,9		0,75	1		9,2	9,2	9,2	9,1	9	8,9	8,7	8,4	8,2	7,6	7,1	6,4	5,6	4,4	3,1	
NR4 50/200B/B	5	2,9		1,1	1,5		12,8	12,6	12,5	12,3	12,1	11,9	11,5	11,2	10,7	10	9,2	8,2	7,1	5,2		
NR4 50/200A/B	5	2,9		1,1	1,5		14,3	14,1	14	13,9	13,7	13,5	13,2	12,8	12,4	11,7	11	10	8,8	7,3		
NR4 50/250C/B	6	3,5		1,5	2		17,1	17	16,9	16,6	16,4	16,1	15,9	15,6	15,2	14,6	13,9	12,8	11,3	8,5	5,3	
NR4 50/250B/B	8,6	5		2,2	3		21	20,9	20,8	20,5	20,3	20	19,7	19,4	19	18,4	17,8	16,8	15,6	13,8	11,7	8,5
NR4 50/250A/A	11,1	6,4		3	4		22	21,9	21,9	21,8	21,6	21,4	21,1	20,9	20,5	19,9	19,2	18,3	17,2	15,3	13,4	11

3 ~	230V	400V		P2		Q m³/h	0	10,8	12	13,2	15	16,8	18,9	21	24	27	30	33	37,5	42	48	
	A	A		kW	HP	l/min	0	180	200	220	250	280	315	350	400	450	500	550	630	700	800	
NR4 65/125F	1,65	0,95		0,37	0,5	H m	4,1	3,9	3,85	3,8	3,6	3,5	3,3	3	2,6	2,1	1,6	1				
NR4 65/125D	2,6	1,5		0,55	0,75		5,3	5	5	4,9	4,8	4,7	4,5	4,3	3,9	3,4	2,9	2,4	1,5			
NR4 65/125A/B	3,3	1,9		0,75	1		6,3	6,2	6,1	6	5,9	5,8	5,7	5,5	5,1	4,6	4,1	3,5	2,6	1,5		
NR4 65/125S/B	3,3	1,9		0,75	1		6,8	6,6	6,6	6,5	6,4	6,3	6,1	5,9	5,6	5,1	4,6	4,1	3,2	2,1		
NR4 65/160B/B	5	2,9		1,1	1,5		8,2	8,2	8,2	8,1	8	7,9	7,7	7,5	7,1	6,6	6	5,4	4,3	3,2		
NR4 65/160A/B	5	2,9		1,1	1,5		9,7	9,6	9,5	9,5	9,4	9,2	9	8,8	8,5	8	7,4	6,8	5,8	4,7	3	
NR4 65/200C/B	5	2,9		1,1	1,5		11,4	11,3	11,2	11,1	10,8	10,6	10,3	9,9	9,4	8,7	7,9	7	5,3	3,4		
NR4 65/200B/B	6	3,5		1,5	2		13,3	13,1	13	12,9	12,7	12,4	12,1	11,8	11,2	10,5	9,7	8,9	7,2	5,4		
NR4 65/200A/B	8,6	5		2,2	3		14,5	14,6	14,5	14,4	14,2	13,9	13,6	13,2	12,7	12	11,3	10,5	9	7,2		
NR4 65/250D/B	8,6	5		2,2	3		13,7	13,9	13,8	13,8	13,6	13,4	13,1	12,8	12,3	11,6	10,9	10,1	8,6	7,2		
NR4 65/250C/B	8,6	5		2,2	3		17,1	17,3	17,2	17,2	16,9	16,7	16,3	16	15,4	14,7	13,9	13	11,4	10		
NR4 65/250B/A	11,1	6,4		3	4		19,9	20,1	20	20	19,8	19,6	19,3	19	18,4	17,7	16,9	16,1	14,6	13,2	10,8*	
NR4 65/250A/A	14,4	8,3		4	5,5		21,4	21,6	21,5	21,4	21,3	21,1	20,8	20,5	19,9	19,2	18,4	17,6	16,1	14,7	12,2*	

3 ~	230V	400V		P2		Q m³/h	0	20	25	30	35	40	50	60	70	80	90	100	110			
	A	A		kW	HP	l/min	0	333	417	500	583	667	833	1000	1167	1333	1500	1667	1840			
NR4 100C/B	5	2,9		1,1	1,5	H m	6,6	6,6	6,4	6,3	6	5,6	4,6	3,3								
NR4 100B/B	5	2,9		1,1	1,5		7,5	7,5	7,4	7,2	7	6,6	5,6	4,4								
NR4 100A/B	6	3,5		1,5	2		9	9	8,9	8,8	8,6	8,3	7,4	6,2	4,8							
NR4 125C/B	8,6	5		2,2	3		10,2			10,2	10,1	10	9,6	9	8,2	7,1	5,7	4				
NR4 125B/A	11,1	6,4		3	4		12			12	11,9	11,8	11,6	11	10,4	9,4	8,2	6,7	5,1			
NR4 125A/A	14,4	8,3		4	5,5		13,6			13,6	13,5	13,4	13,2	12,9	12,3	11,4	10,3	8,8	7,2			

P_1 Max. power input. P_2 Rated motor power output. Tolerances according to UNI EN ISO 9906:2012

CALPEDA ROMANIA - INFINITY PUMPS SRL
Tel: 0268.33.47.47 / 0722.244.944
vanzari@calpeda.ro | www.calpeda.ro

NR In-line Pumps

Characteristic curves n ≈ 2900 rpm

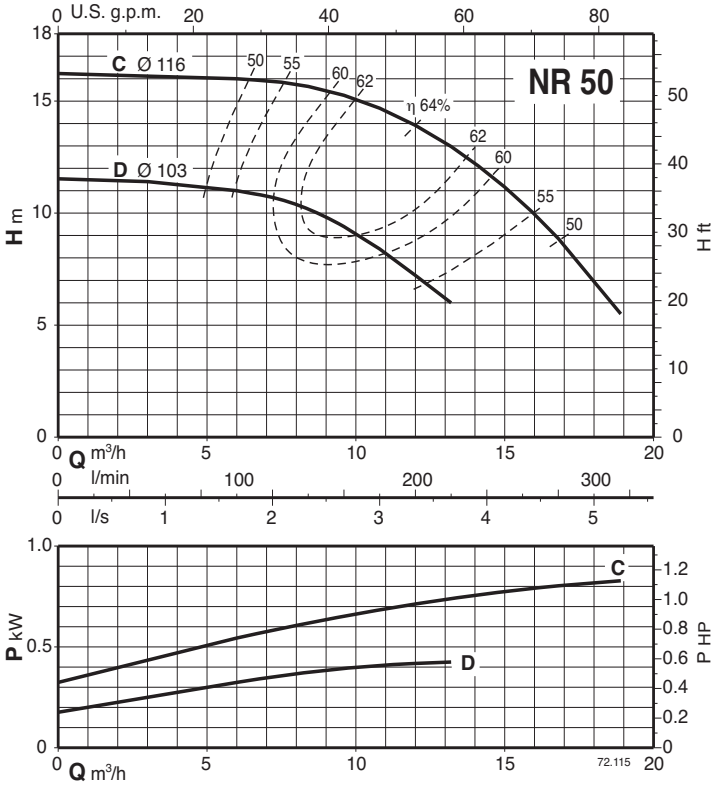

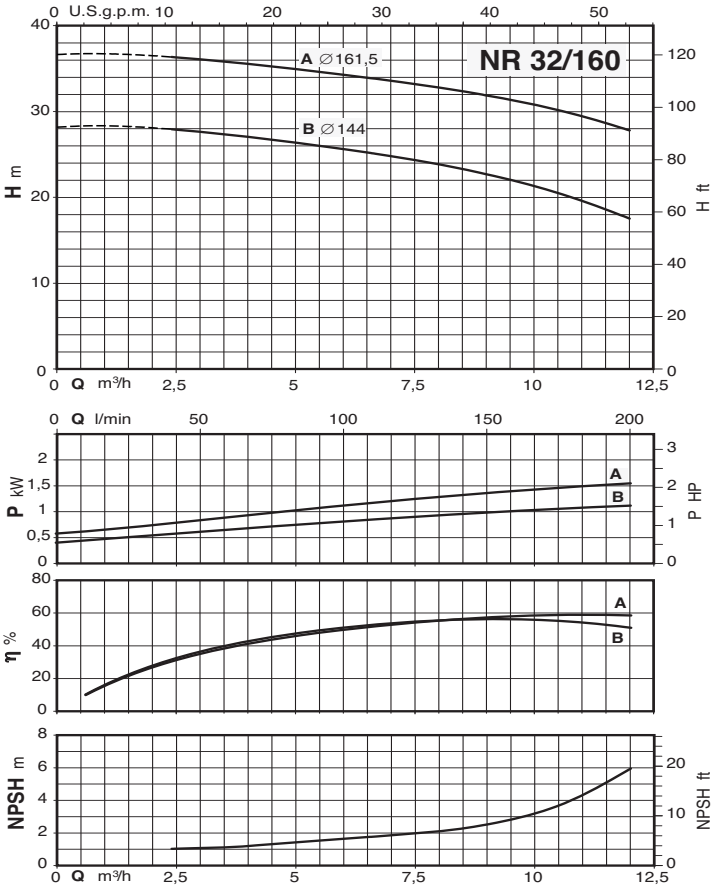

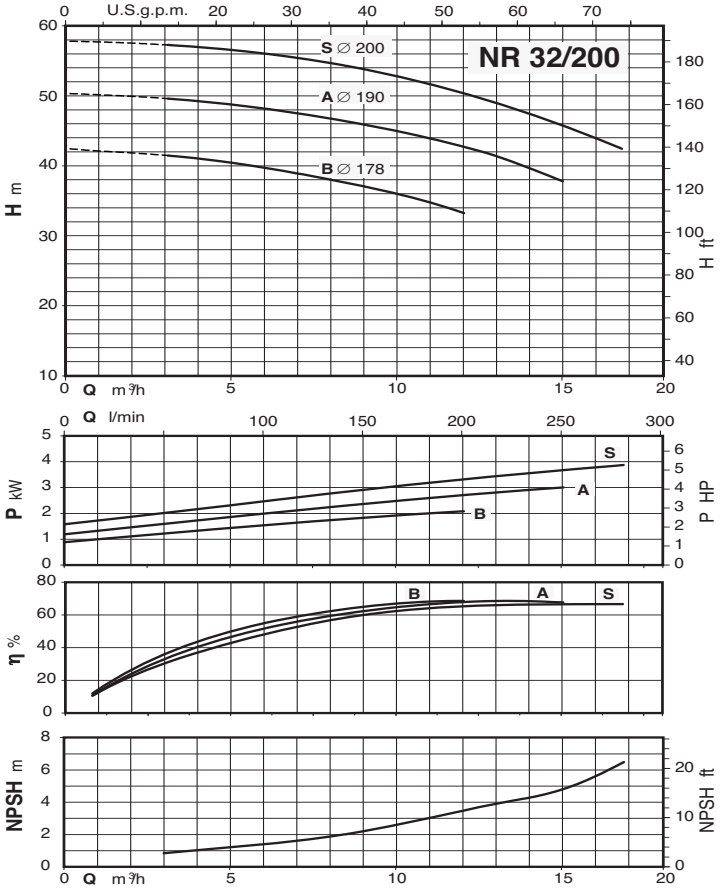

CALPEDA ROMANIA - INFINITY PUMPS SRL
Tel: 0268.33.47.47 / 0722.244.944
vanzari@calpeda.ro | www.calpeda.ro

NR In-line Pumps

Characteristic curves n ≈ 2900 rpm

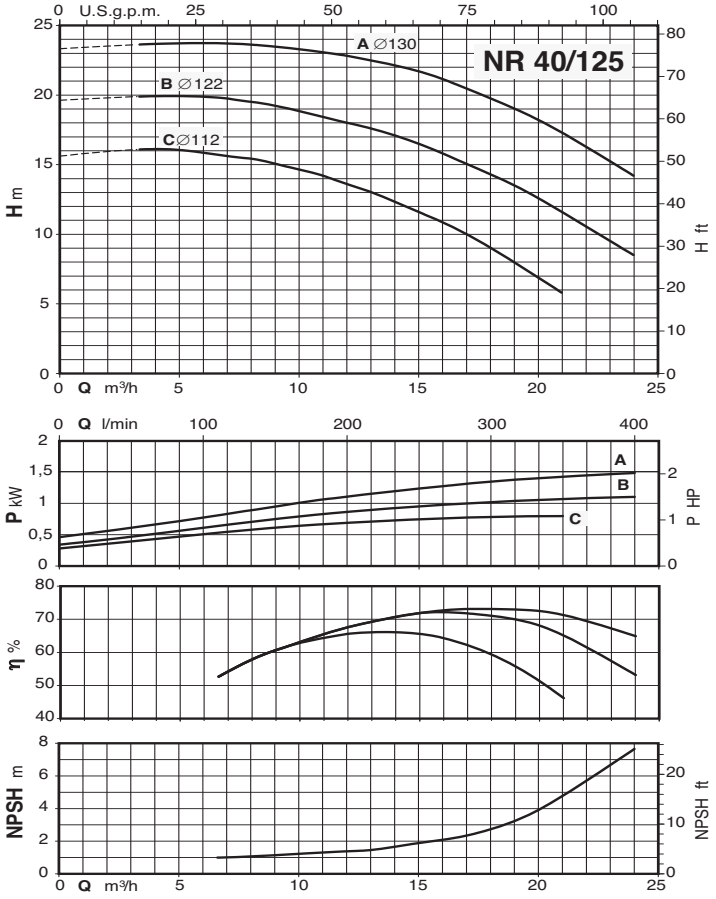

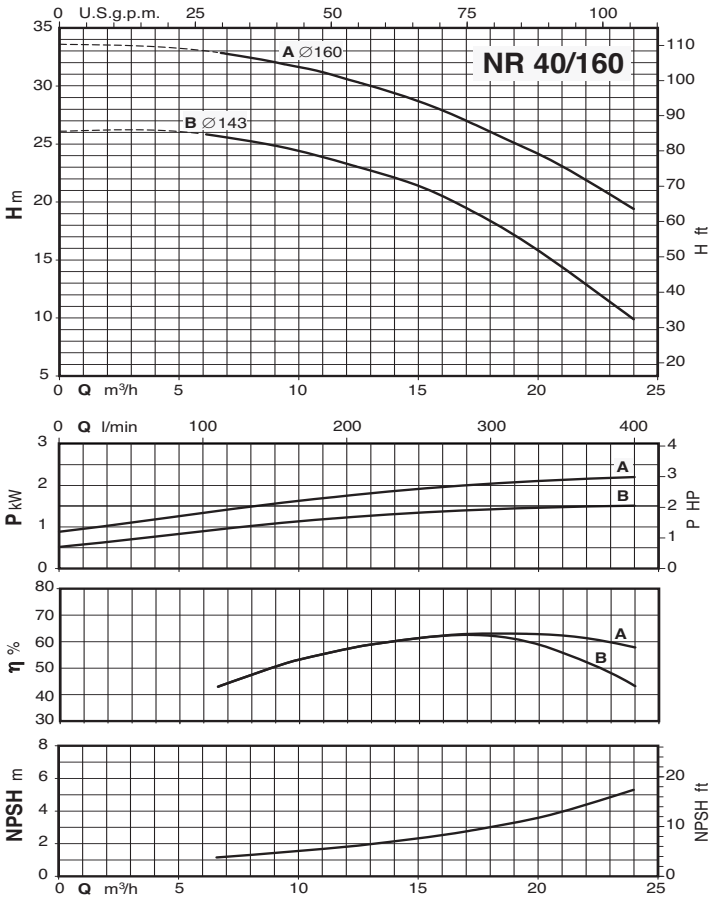

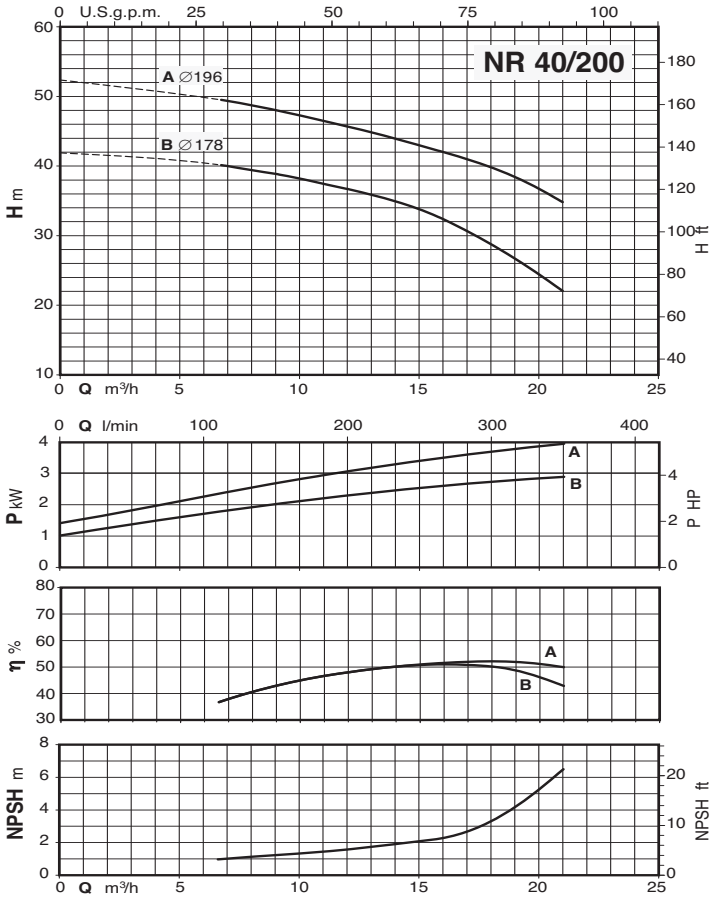

CALPEDA ROMANIA - INFINITY PUMPS SRL
Tel: 0268.33.47.47 / 0722.244.944
vanzari@calpeda.ro | www.calpeda.ro

NR In-line Pumps

Characteristic curves n ≈ 2900 rpm

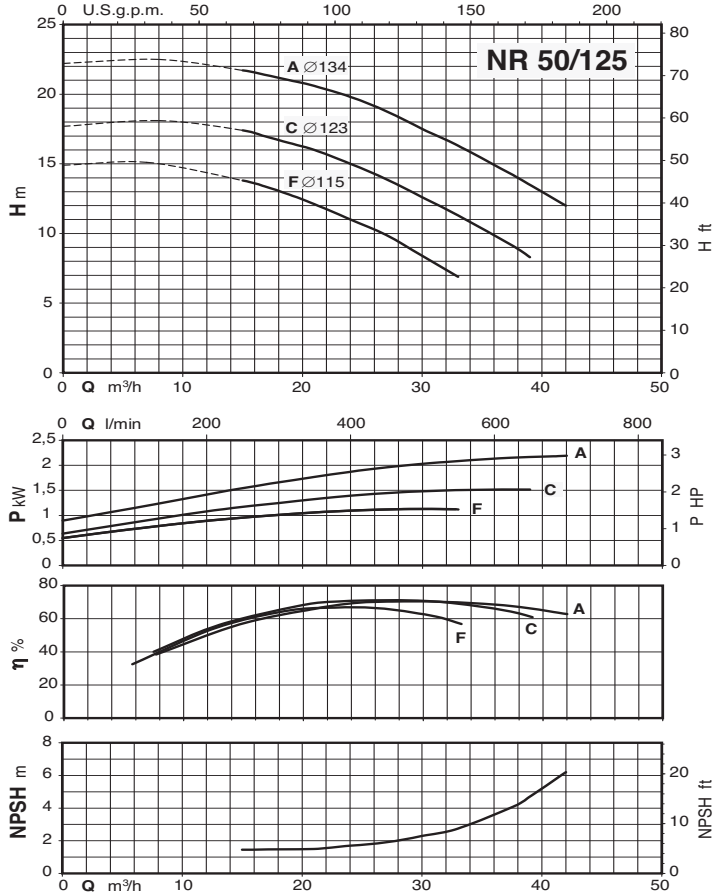

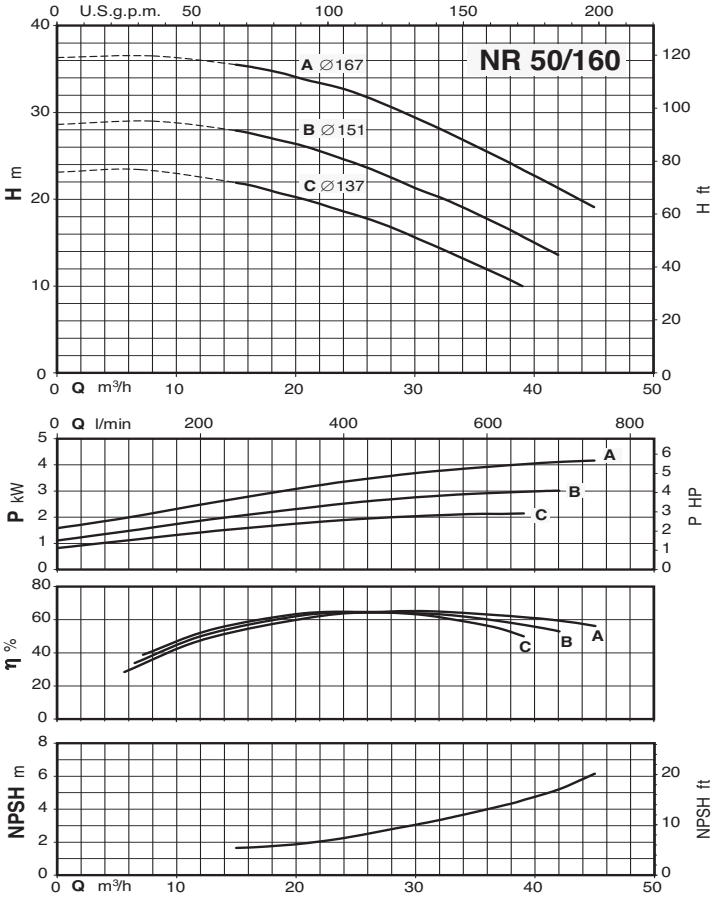

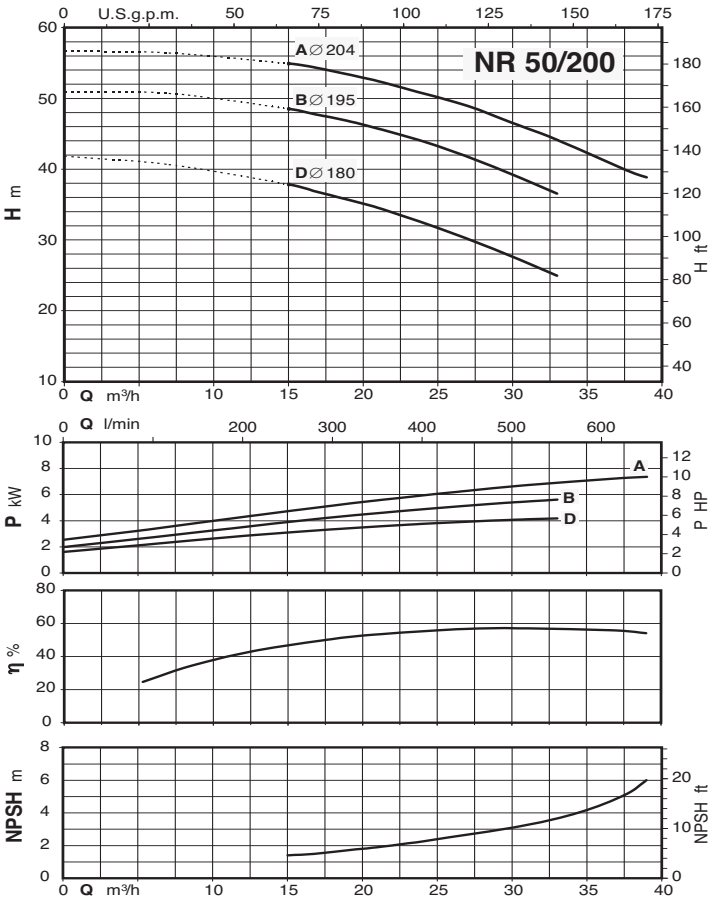

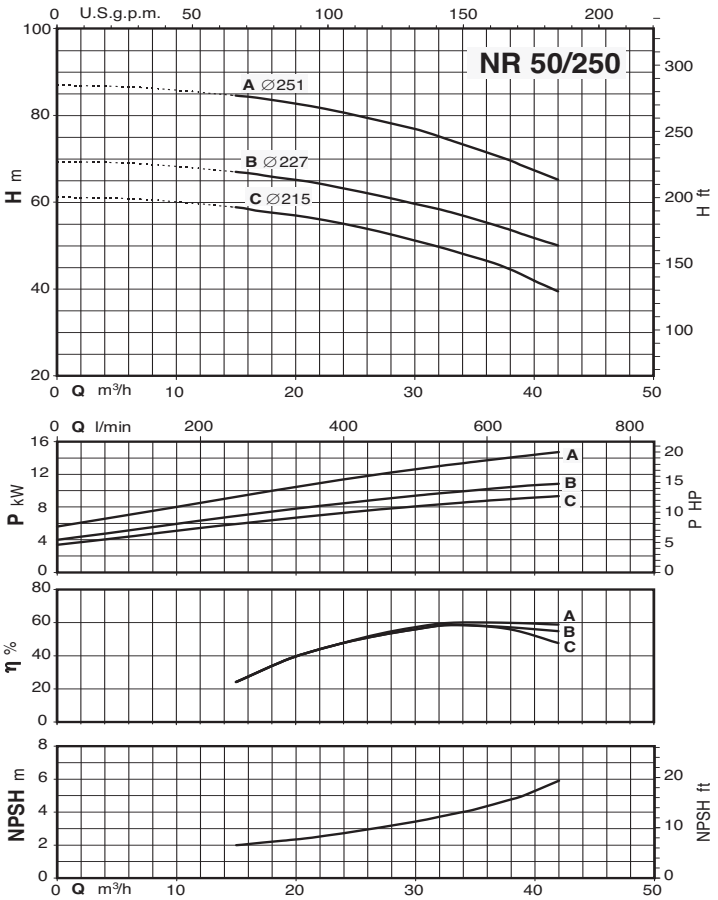

CALPEDA ROMANIA - INFINITY PUMPS SRL
Tel: 0268.33.47.47 / 0722.244.944
vanzari@calpeda.ro | www.calpeda.ro

NR In-line Pumps

Characteristic curves n ≈ 2900 rpm

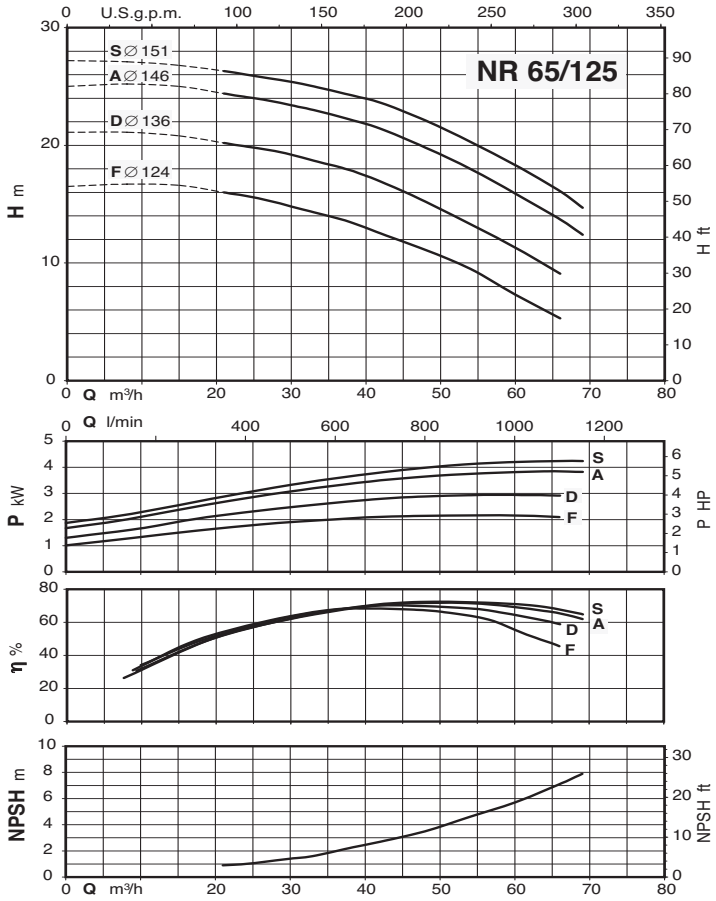

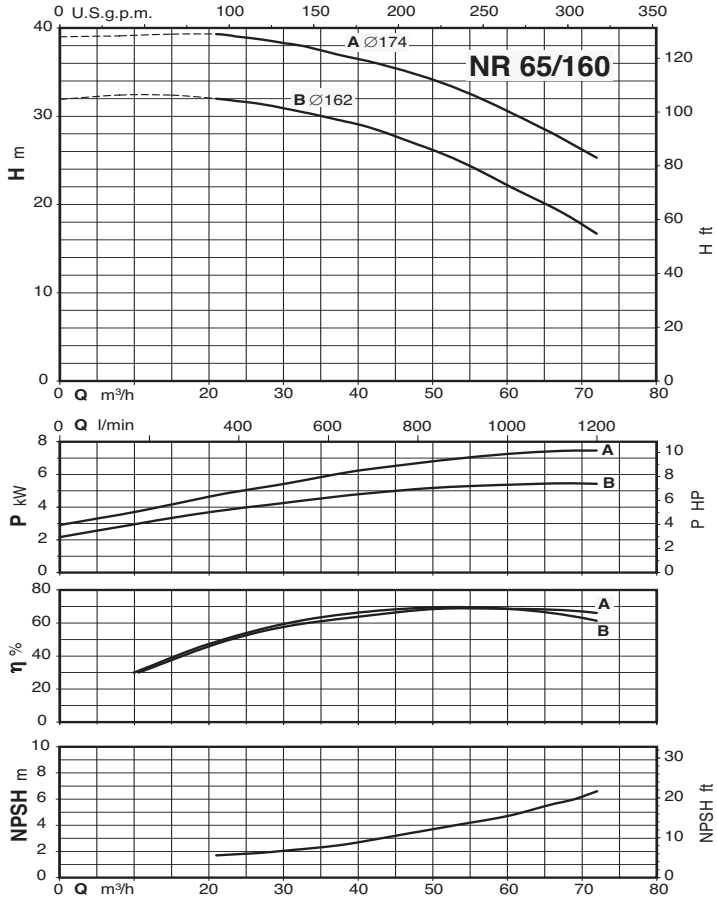

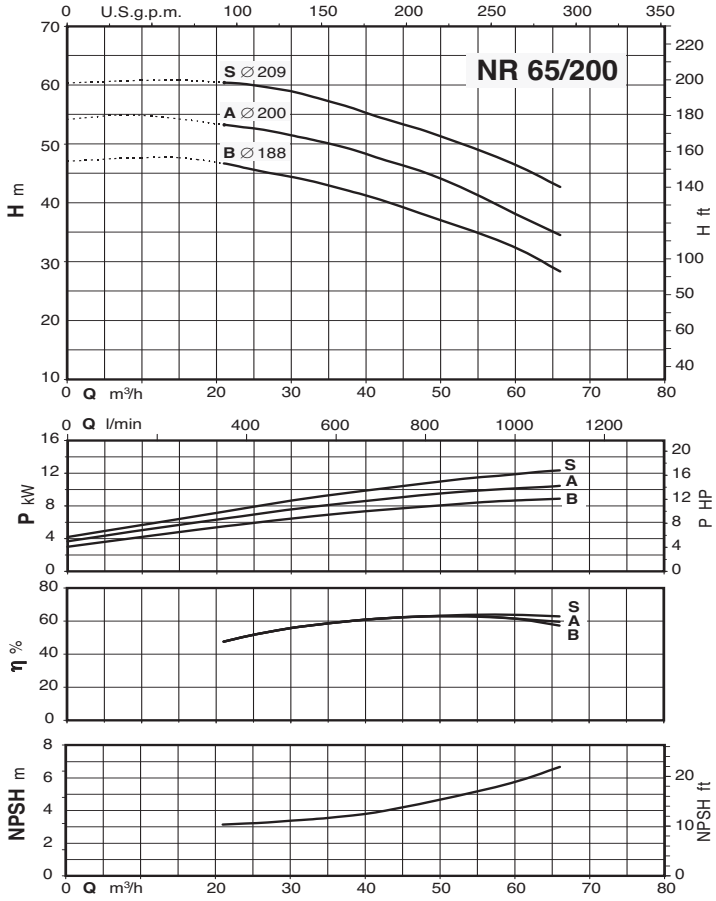

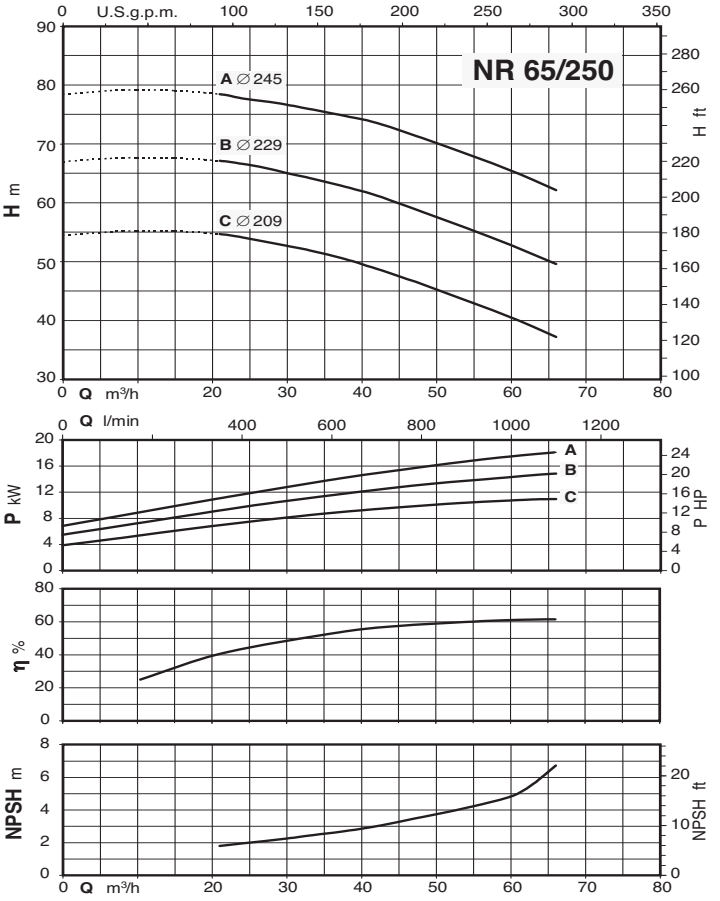

CALPEDA ROMANIA - INFINITY PUMPS SRL
Tel: 0268.33.47.47 / 0722.244.944
vanzari@calpeda.ro | www.calpeda.ro

NR4

In-line Pumps

Characteristic curves n ≈ 1450 rpm

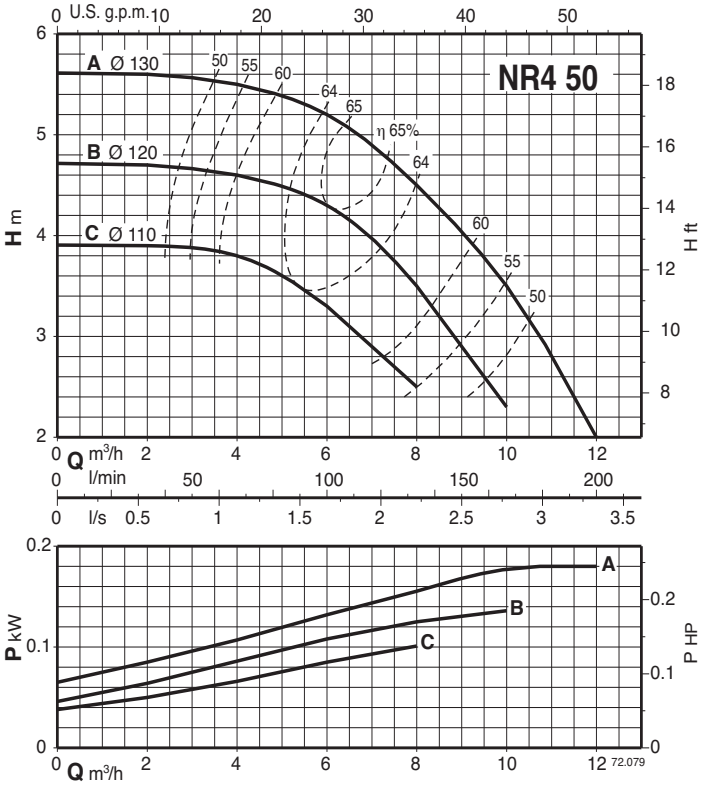

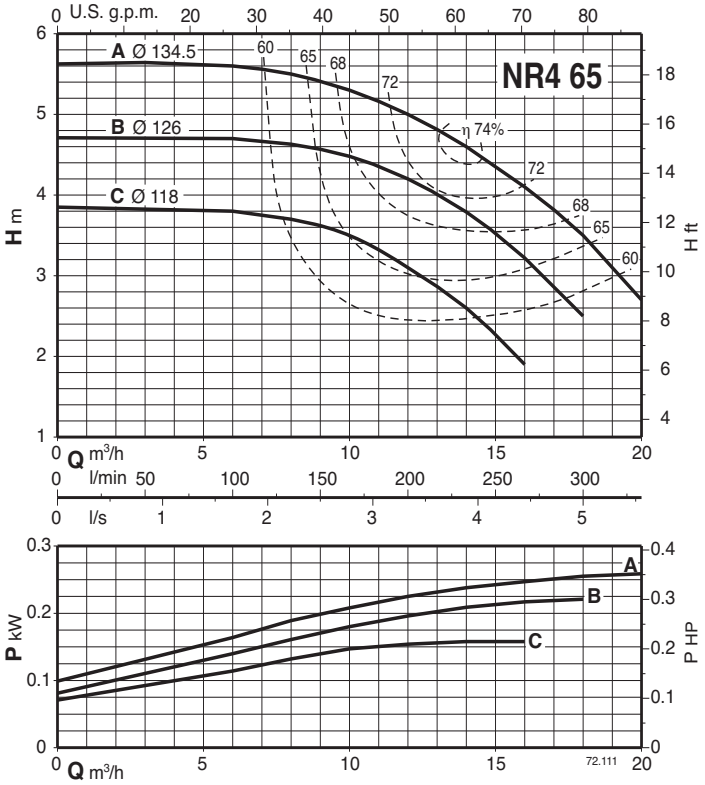

CALPEDA ROMANIA - INFINITY PUMPS SRL
Tel: 0268.33.47.47 / 0722.244.944
vanzari@calpeda.ro | www.calpeda.ro

NR4

In-line Pumps

Characteristic curves n ≈ 1450 rpm

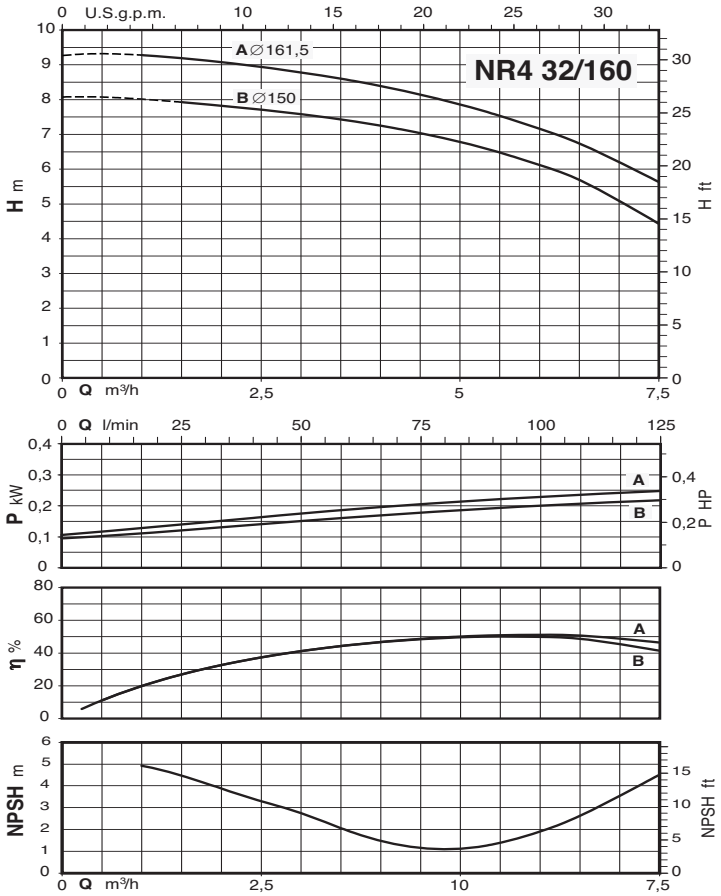

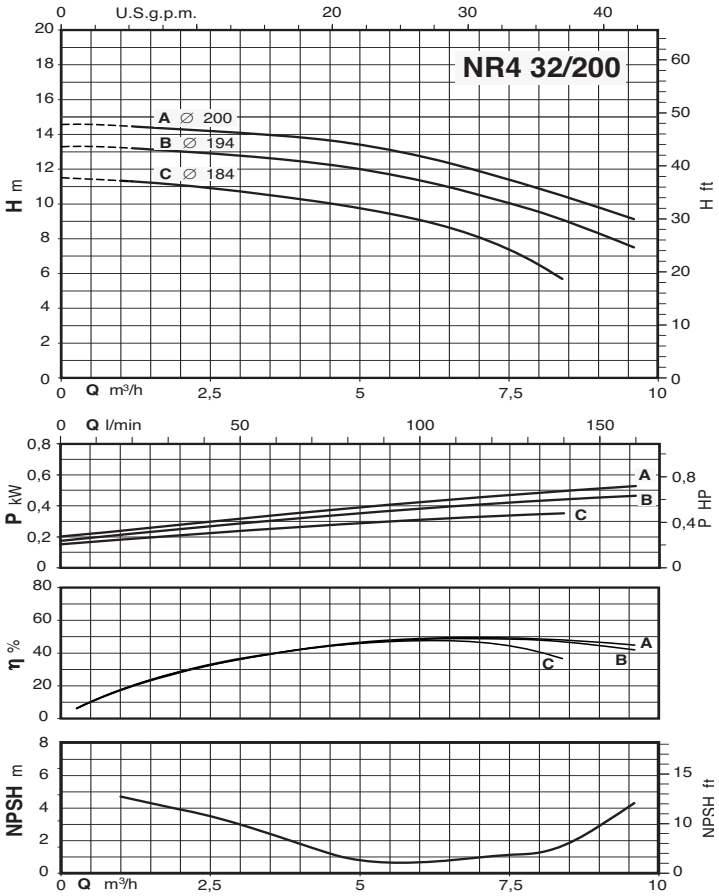

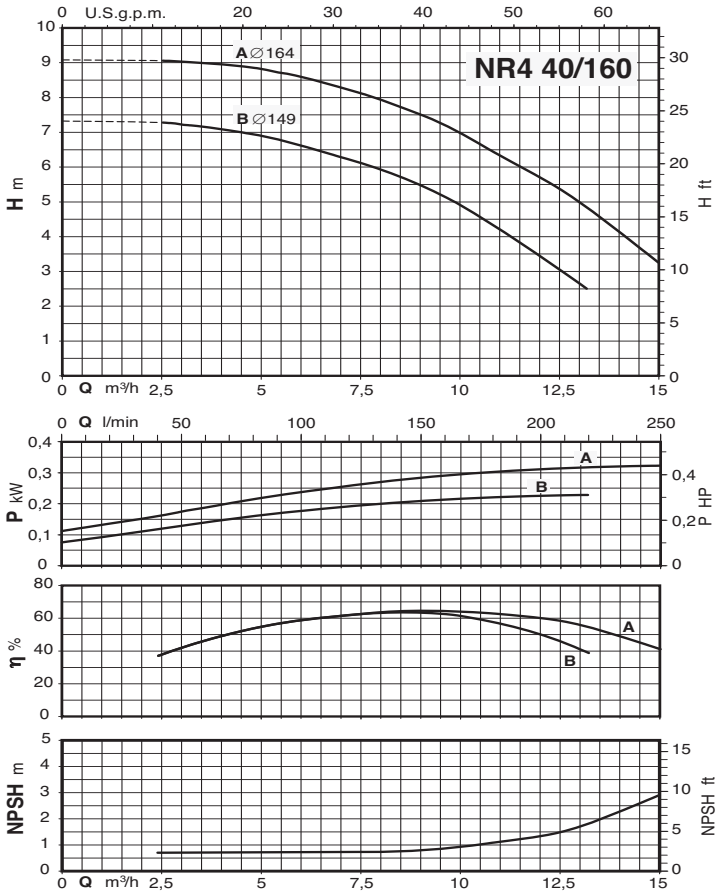

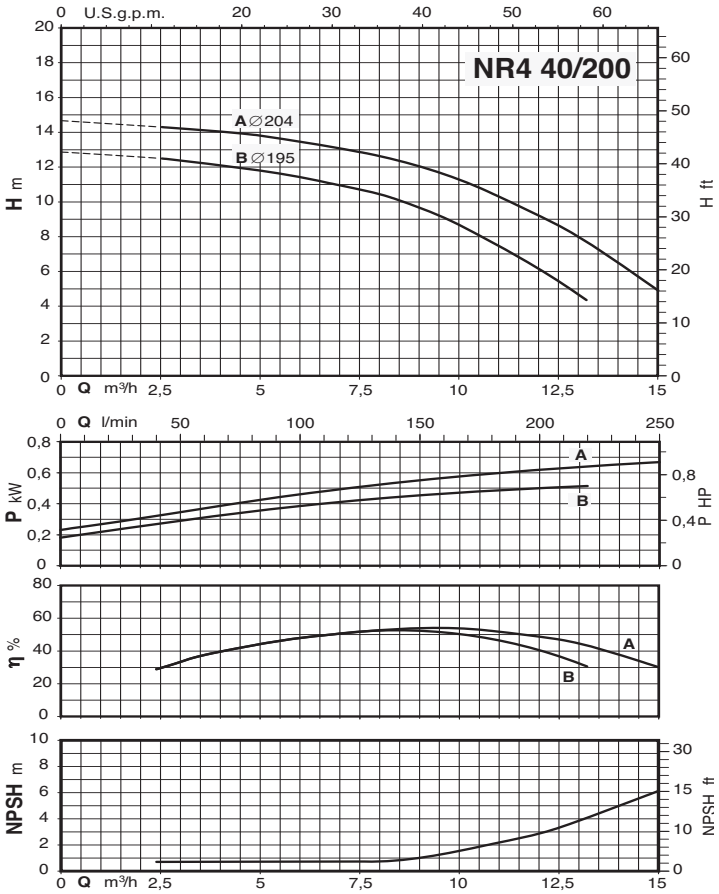

CALPEDA ROMANIA - INFINITY PUMPS SRL
Tel: 0268.33.47.47 / 0722.244.944
vanzari@calpeda.ro | www.calpeda.ro

NR4

In-line Pumps

Characteristic curves n ≈ 1450 rpm

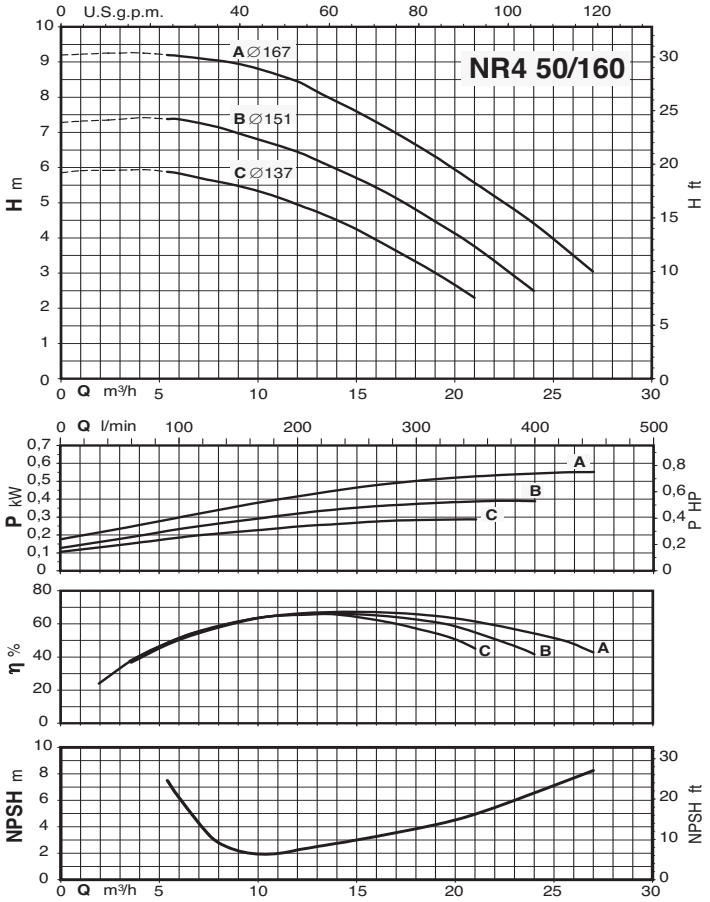

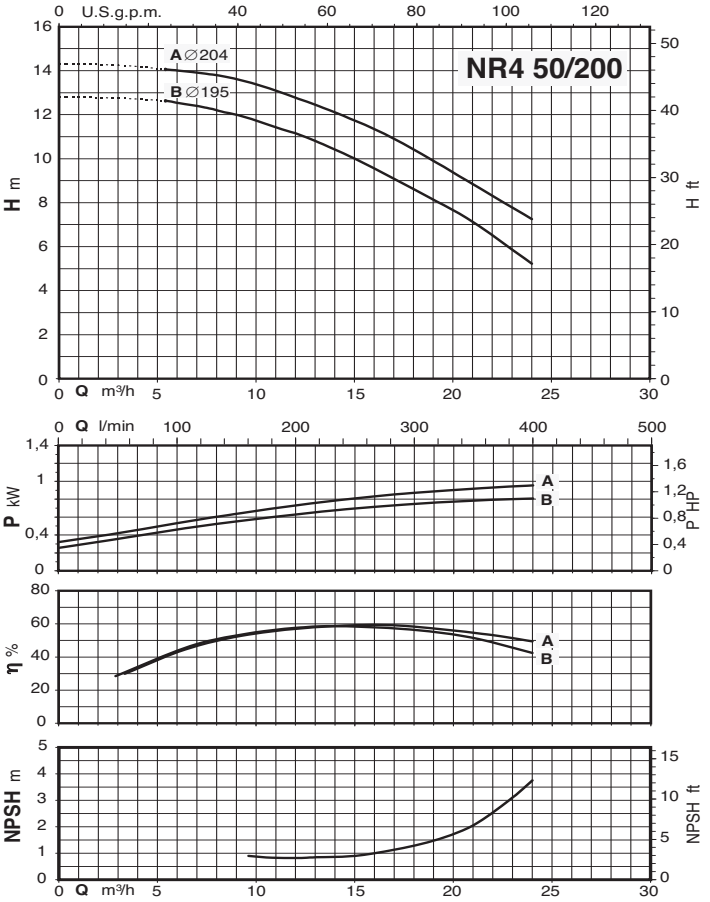

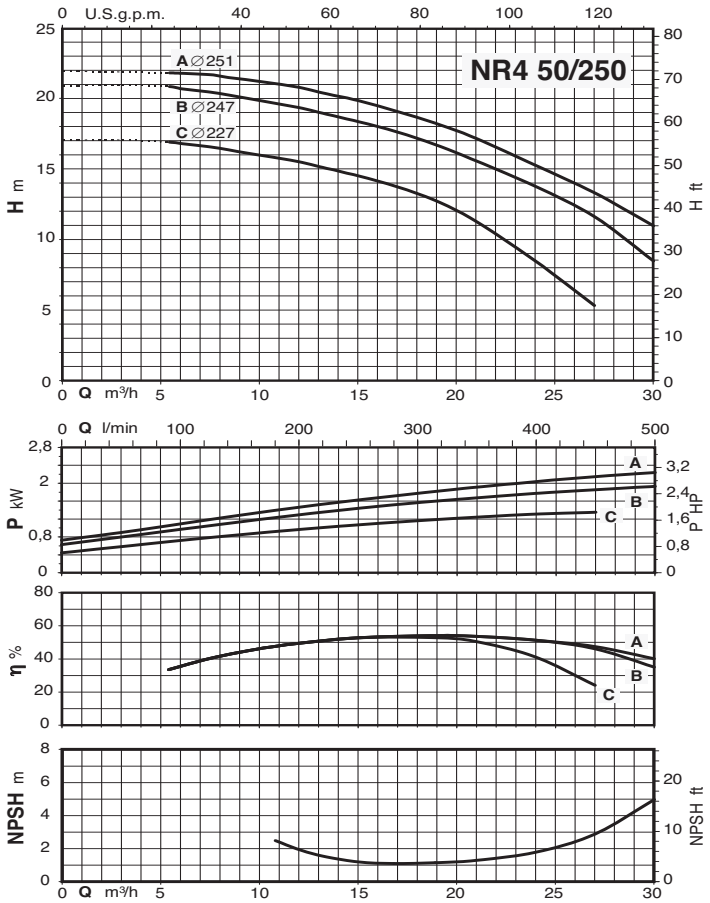

CALPEDA ROMANIA - INFINITY PUMPS SRL
Tel: 0268.33.47.47 / 0722.244.944
vanzari@calpeda.ro | www.calpeda.ro

NR4

In-line Pumps

Characteristic curves n ≈ 1450 rpm

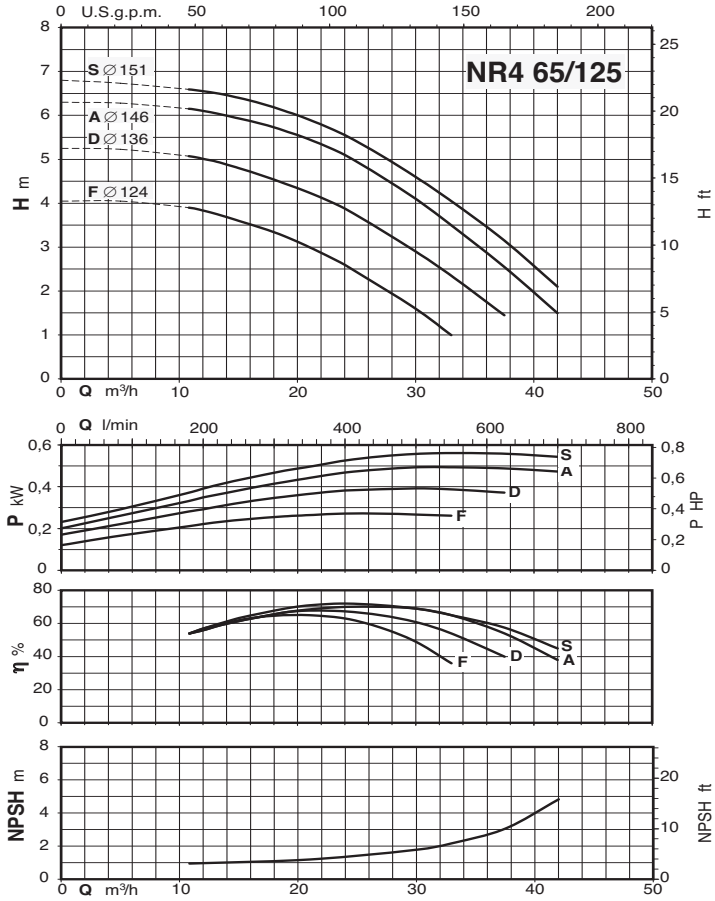

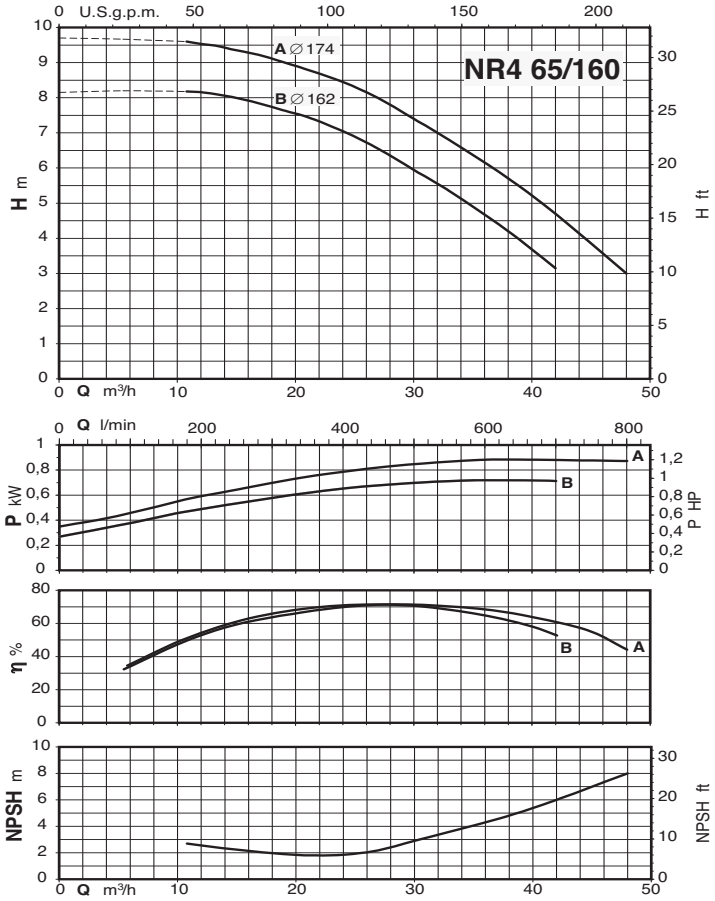

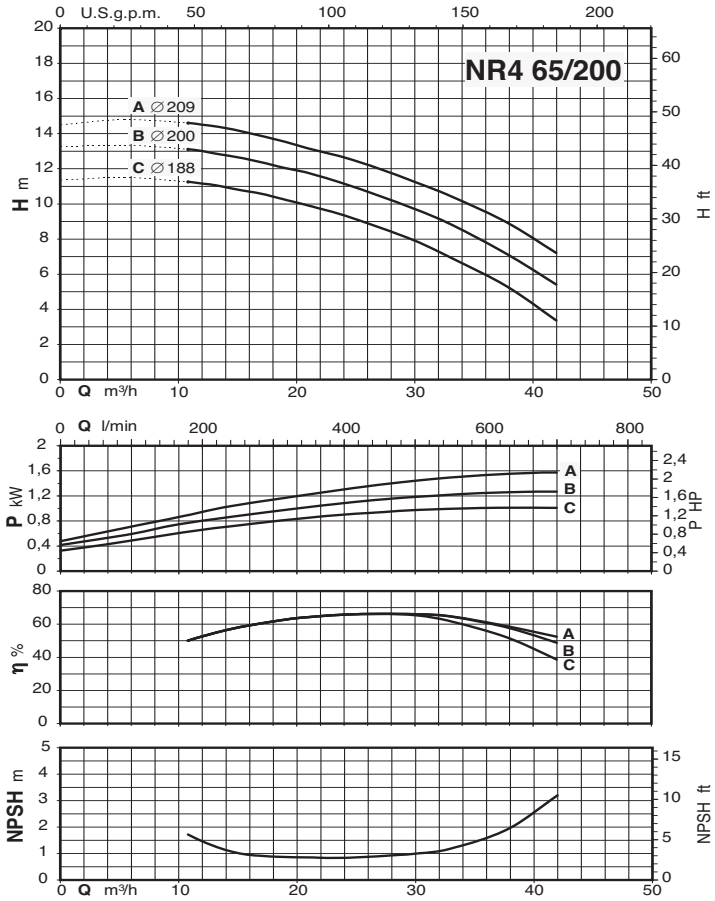

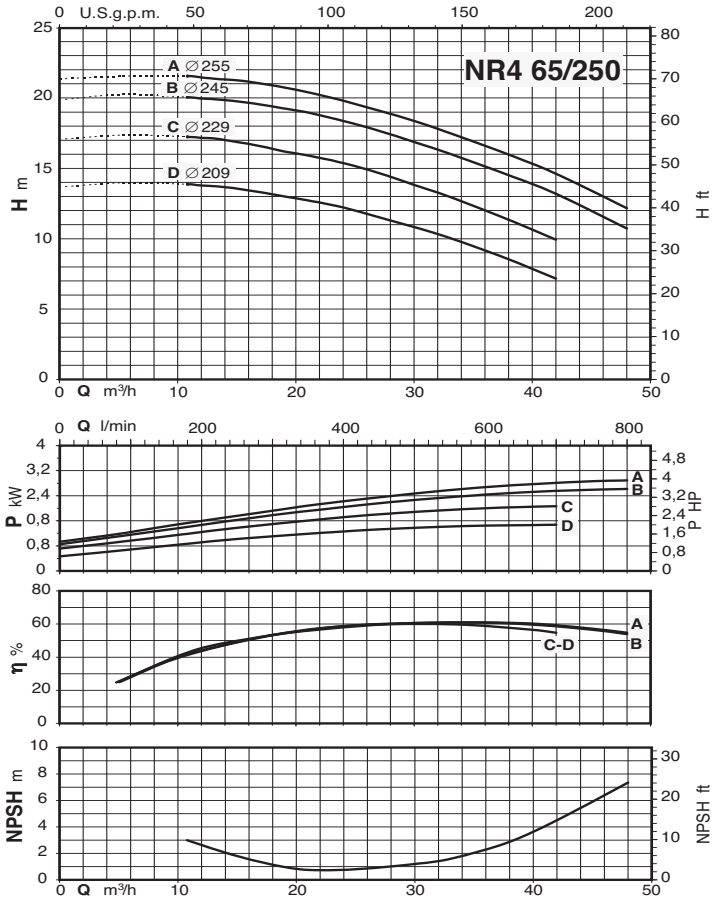

CALPEDA ROMANIA - INFINITY PUMPS SRL
Tel: 0268.33.47.47 / 0722.244.944
vanzari@calpeda.ro | www.calpeda.ro

NR4

In-line Pumps

Characteristic curves n ≈ 1450 rpm

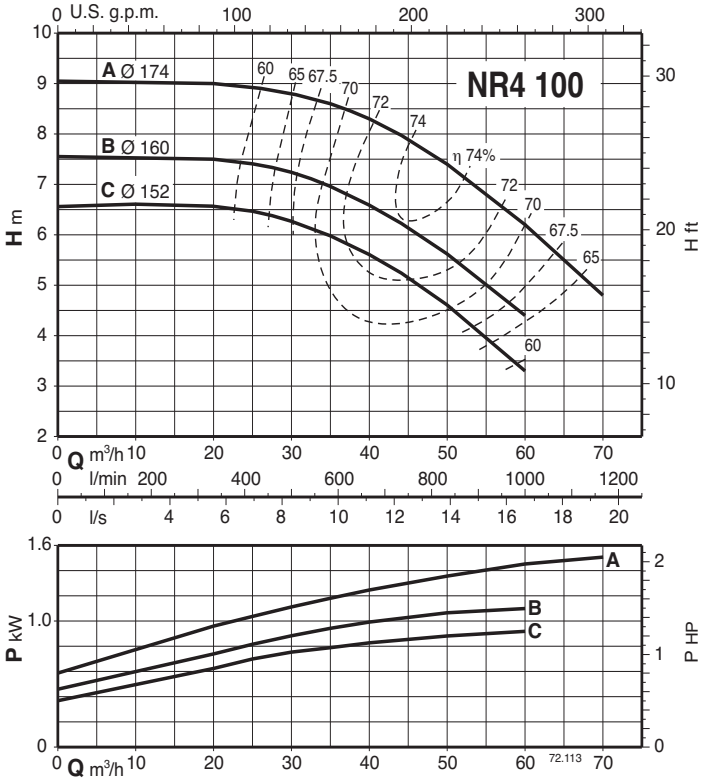

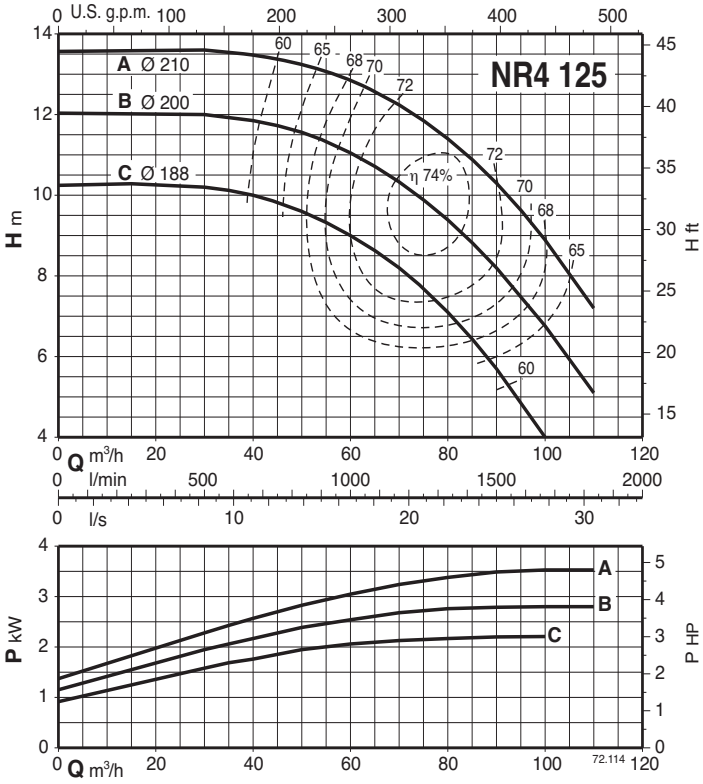

CALPEDA ROMANIA - INFINITY PUMPS SRL
Tel: 0268.33.47.47 / 0722.244.944
vanzari@calpeda.ro | www.calpeda.ro

NR,NR4

In-line Pumps

Dimensions and weights

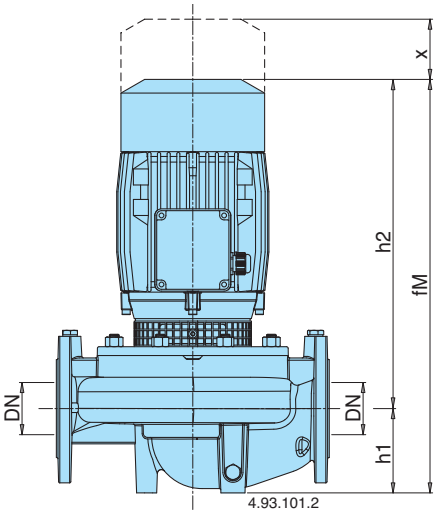

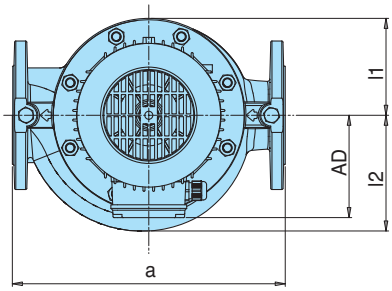

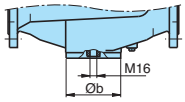

TYPE	mm										kg
	DN	a	fM	h1	h2	Øb	AD	l1	l2	x	
NR 50D/A-C/B	50	320	360	90	270	98	111	93	100	70	21,7-23,8
NR 32/160A/A-B/A	32	340	421	80	341	-	128	102	102	60	28,6-27
NR 32/200B	32	440	469	85	384	-	128	126	126	60	36,3
NR 32/200A/A-S/A	32	440	495	85	410	-	138	126	126	60	44-47
NR 40/125A/A-B/A-C	40	320	420	81	339	-	128	93	98	70	29,5-27,5-26,5
NR 40/160B/A	40	320	430	81	349	-	128	119	119	75	35,0
NR 40/160A/A	40	320	470	81	389	-	128	119	119	75	40,0
NR 40/200A/A-B	40	440	496	81	430	-	138	140	140	75	56,6-53,4
NR 50/125C/A-F/A	50	340	437	90	347	-	128	96	115	75	31,5-29,5
NR 50/125A/B	50	340	477	90	387	-	128	96	115	75	36,1
NR 50/160C/B	50	340	480	90	390	-	128	120	128	75	41,6
NR 50/160A/B-B/A	50	340	506	90	416	-	138	120	128	75	51,8-48,5
NR 50/200D/B	50	440	516	100	416	-	138	140	140	80	59,7
NR 50/200A/A-B/A	50	440	544	100	444	-	160	140	140	80	77,2-69,7
NR 50/250C/B	50	440	657	100	557	-	185	175	175	85	114
NR 50/250B/B	50	440	707	100	557	-	185	175	175	85	121
NR 50/250A/B	50	440	732	100	632	-	185	175	175	85	149,5
NR 65/125F/B	65	340	494	105	389	-	128	121	145	95	46
NR 65/125S/B-A/B-D/A	65	340	520	105	415	-	138	121	145	95	56,1-56,1-54,6
NR 65/160A/A-B/A	65	340	552	105	447	-	160	121	142	95	74-67,5
NR 65/200B/B	65	475	666	105	561	-	185	140	153	90	108
NR 65/200A/B	65	475	716	105	611	-	185	140	153	90	114
NR 65/200S/B	65	475	741	105	636	-	185	140	153	90	142,5
NR 65/250C/B	65	475	722	105	567	-	185	175	175	90	134
NR 65/250B/B	65	475	747	105	642	-	185	175	175	90	155
NR 65/250A/C	65	475	793	105	688	-	206	175	175	90	-

TYPE	mm										kg
	DN	a	fM	h1	h2	Øb	AD	l1	l2	x	
NR4 50A/A-B/A-C/A	50	320	360	90	270	98	111	93	100	70	22-22-22
NR4 65A/A-B/A-C/A	65	360	370	100	270	118	111	102	114	70	28-28-28
NR4 100A/B-B/B-C/B	100	500	549	150	399	162	138	153	173	105	67-59-59
NR4 125C/B	125	600	589	170	419	194	138	172	195	120	91,5
NR4 125A/A-B/A	125	600	608	160	438	194	160	172	195	120	110-108
NR4 32/160A-B	32	340	421	80	341	-	128	102	102	60	23-22,9
NR4 32/200B-C	32	440	429	85	344	-	128	126	126	60	30,8-29,2
NR4 32/200A/A	32	440	469	85	344	-	128	126	126	60	
NR4 40/160A-B	40	320	430	81	349	-	128	119	119	75	31,5 - 31
NR4 40/200B	40	440	430	81	349	-	128	140	140	75	39,5
NR4 40/200A/A	50	440	470	81	349	-	128	140	140	75	43
NR4 50/160B-C	50	340	440	90	350	-	128	120	128	75	35,5-33,5
NR4 50/160A/B	50	340	480	90	350	-	128	120	128	75	37,5
NR4 50/200A/B-B/B	50	440	516	100	416	-	138	140	140	80	56
NR4 50/250C/B	50	440	516	100	416	-	138	175	175	85	77,5
NR4 50/250A/A-B/B	50	440	545	100	445	-	160	175	175	85	93,5-80
NR4 65/125D-F	65	340	454	105	349	-	128	121	145	95	39-37
NR4 65/125S/B-A/B	65	340	494	105	349	-	128	121	145	95	42-41,5
NR4 65/160A/B-B/B	65	340	504	105	399	-	138	121	142	95	42,7-42,5
NR4 65/200C/B	65	475	536	105	431	-	138	140	153	90	52
NR4 65/200B/B	65	475	536	105	431	-	138	140	153	90	60
NR4 65/200A/B	65	475	552	105	447	-	160	140	153	90	64,5
NR4 65/250C/B-D/B	65	475	555	105	450	-	160	175	175	90	75,5-75,5
NR4 65/250A/A-B/A	65	475	555	105	450		160	175	175	90	98-85

Flanges PN 10, EN 1092-2

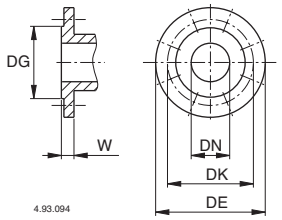

DN	mm					
	DG	DK	DE	Holes N°	Holes Ø	W
32	76	100	140	4	19	18
40	84	110	150	4	19	18
50	99	125	165	4	19	20
65	118	145	185	4	19	20
80	132	160	200	8	19	22
100	156	180	220	8	19	24
125	184	210	250	8	19	24

Installation

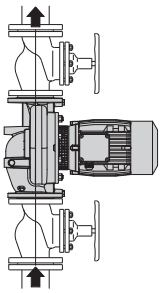

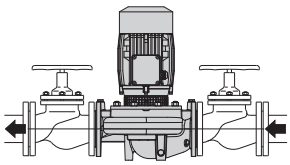

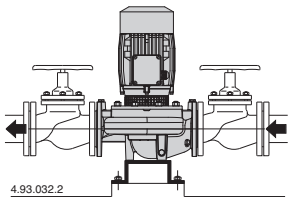

CALPEDA ROMANIA - INFINITY PUMPS SRL
Tel: 0268.33.47.47 / 0722.244.944
vanzari@calpeda.ro | www.calpeda.ro

NR EI, NR4 EI

In-line Pumps

Dimensions and weights

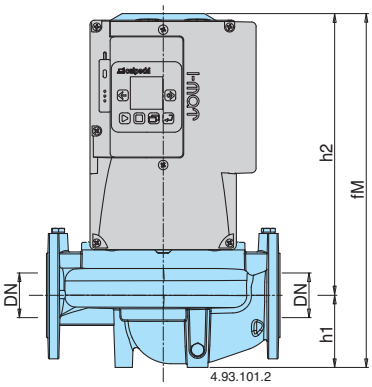

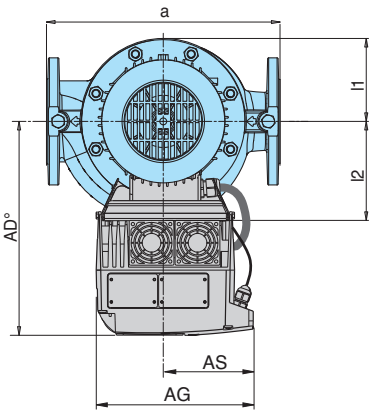

Flanges PN 10, EN 1092-2

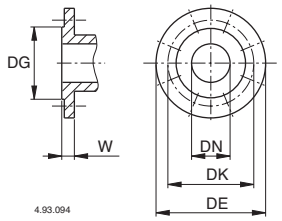

DN	mm					
	DG	DK	DE	Holes N°	Holes Ø	W
32	76	100	140	4	19	18
40	84	110	150	4	19	18
50	99	125	165	4	19	20
65	118	145	185	4	19	20
80	132	160	200	8	19	22
100	156	180	220	8	19	24
125	184	210	250	8	19	24

TYPE	mm											kg
	DN	a	fM	h1	h2	AD°	AG	AS	l1	l2	x	
NR EI 50D/A-C/B	50	320	399	90	270	270	190	105	93	100	70	28-30,2
NR EI 32/160A/A-B/A	32	340	421	80	341	286	190	105	102	102	60	35-33,3
NR EI 32/200B	32	440	469	85	384	286	210	118	126	126	60	43,8
NR EI 32/200A/A-S/A	32	440	495	85	410	294	210	118	126	126	60	51,5-54,5
NR EI 40/125A/A-B/A-C	40	320	420	81	339	286	190	105	93	98	70	35,9-33,9-32,9
NR EI 40/160B/A	40	320	430	81	349	286	190	105	119	119	75	41,4
NR EI 40/160A/A	40	320	470	81	389	286	210	118	119	119	75	47,5
NR EI 40/200A/A-B	40	440	496	81	430	294	210	118	140	140	75	64,1-61
NR EI 50/125C/A-F/A	50	340	437	90	347	286	190	105	96	115	75	37,9-35,9
NR EI 50/125A/B	50	340	477	90	387	286	210	118	96	115	75	43,6
NR EI 50/160C/B	50	340	480	90	390	286	210	118	120	128	75	49,1
NR EI 50/160A/B-B/A	50	340	506	90	416	294	210	118	120	128	75	59,3-56
NR EI 50/200D/B	50	440	516	100	416	294	210	118	140	140	80	67,2
NR EI 50/200A/A-B/A	50	440	544	100	444	368	281	153	140	140	80	92-84,5
NR EI 50/250C/B	50	440	657	100	557	393	281	153	175	175	85	128,8
NR EI 50/250B/B	50	440	707	100	557	393	281	153	175	175	85	135,8
NR EI 50/250A/B	50	440	732	100	632	471	350	190	175	175	85	184,5
NR EI 65/125F/B	65	340	494	105	389	286	210	118	121	145	95	53,5
NR EI 65/125S/B-A/B-D/A	65	340	520	105	415	294	210	118	121	145	95	63,6-63,6-62,1
NR EI 65/160A/A-B/A	65	340	552	105	447	368	281	153	121	142	95	88,8-82,3
NR EI 65/200B/B	65	475	666	105	561	368	281	153	140	153	90	122,8
NR EI 65/200A/B	65	475	716	105	611	393	281	153	140	153	90	128,8
NR EI 65/200S/B	65	475	741	105	636	471	350	190	140	153	90	177,5
NR EI 65/250C/B	65	475	722	105	567	393	281	153	175	175	90	148,8
NR EI 65/250B/B	65	475	747	105	642	471	350	190	175	175	90	190
NR EI 65/250A/C	65	475	793	105	688	491	350	190	175	175	90	-

TYPE	mm											kg
	DN	a	fM	h1	h2	AD°	AG	AS	l1	l2	x	
NR4 EI 50A/A-B/A-C/A	50	320	399	90	270	270	190	105	93	100	70	28,4-28,4-28,4
NR4 EI 65A/A-B/A-C/A	65	360	409	100	270	270	190	105	102	114	70	34,4-34,4-34,4
NR4 EI 100B/B-C/B	100	500	549	150	399	294	190	105	153	173	105	65,4-65,4
NR4 EI 100A/B	100	500	549	150	399	294	190	105	153	173	105	73,4
NR4 EI 125A/A-B/A-C/B	125	600	608	160	438	368	210	118	172	195	120	117,5-115,5-97,9
NR4 EI 32/160A-B	32	340	421	80	341	286	190	105	102	102	60	29,4-29,3
NR4 EI 32/200B-C	32	440	429	85	344	286	190	105	126	126	60	37,2-35,2
NR4 EI 32/200A/A	32	440	469	85	344	286	190	105	126	126	60	
NR4 EI 40/160A-B	40	320	430	81	349	286	190	105	119	119	75	37,9-37,4
NR4 EI 40/200B	40	440	430	81	349	286	190	105	140	140	75	45,9
NR4 EI 40/200A/A	40	440	470	81	349	286	190	105	140	140	75	49,4
NR4 EI 50/160B-C	50	340	440	90	350	286	190	105	120	128	75	41,9-39,9
NR4 EI 50/160A/B	50	340	480	90	350	286	190	105	120	128	75	43,9
NR4 EI 50/200A/B-B/B	50	440	516	100	416	294	190	105	140	140	80	62,4
NR4 EI 50/250C/B	50	440	516	100	416	294	190	105	175	175	85	83,9
NR4 EI 50/250A/A-B/B	50	440	545	100	445	368	210	118	175	175	85	101-86,4
NR4 EI 65/125D-F	65	340	454	105	349	286	190	105	121	145	95	45,4-43,4
NR4 EI 65/125S/B-A/B	65	340	494	105	349	286	190	105	121	145	95	48,4-48
NR4 EI 65/160A/B-B/B	65	340	504	105	399	294	190	105	121	142	95	49,1-48,9
NR4 EI 65/200C/B	65	475	536	105	431	294	190	105	140	153	90	58,4
NR4 EI 65/200B/B	65	475	536	105	431	294	190	105	140	153	90	66,4
NR4 EI 65/200A/B	65	475	552	105	447	368	210	118	175	175	90	70,9
NR4 EI 65/250C/B-D/B	65	475	555	105	450	365	210	118	175	175	90	81,9-81,9
NR4 EI 65/250A/A-B/A	65	475	555	105	450	368	210	118	175	175	90	105,5-92,5

CALPEDA ROMANIA - INFINITY PUMPS SRL
Tel: 0268.33.47.47 / 0722.244.944
vanzari@calpeda.ro | www.calpeda.ro

NR,NR4

In-line Pumps

Features

New Compact Design
A compact structure allows for simple installation even in confined spaces

A Unique Design
An innovative guard (patented) prevents contact with rotating parts, providing protection to the end user whilst allowing for inspection of the mechanical seal.

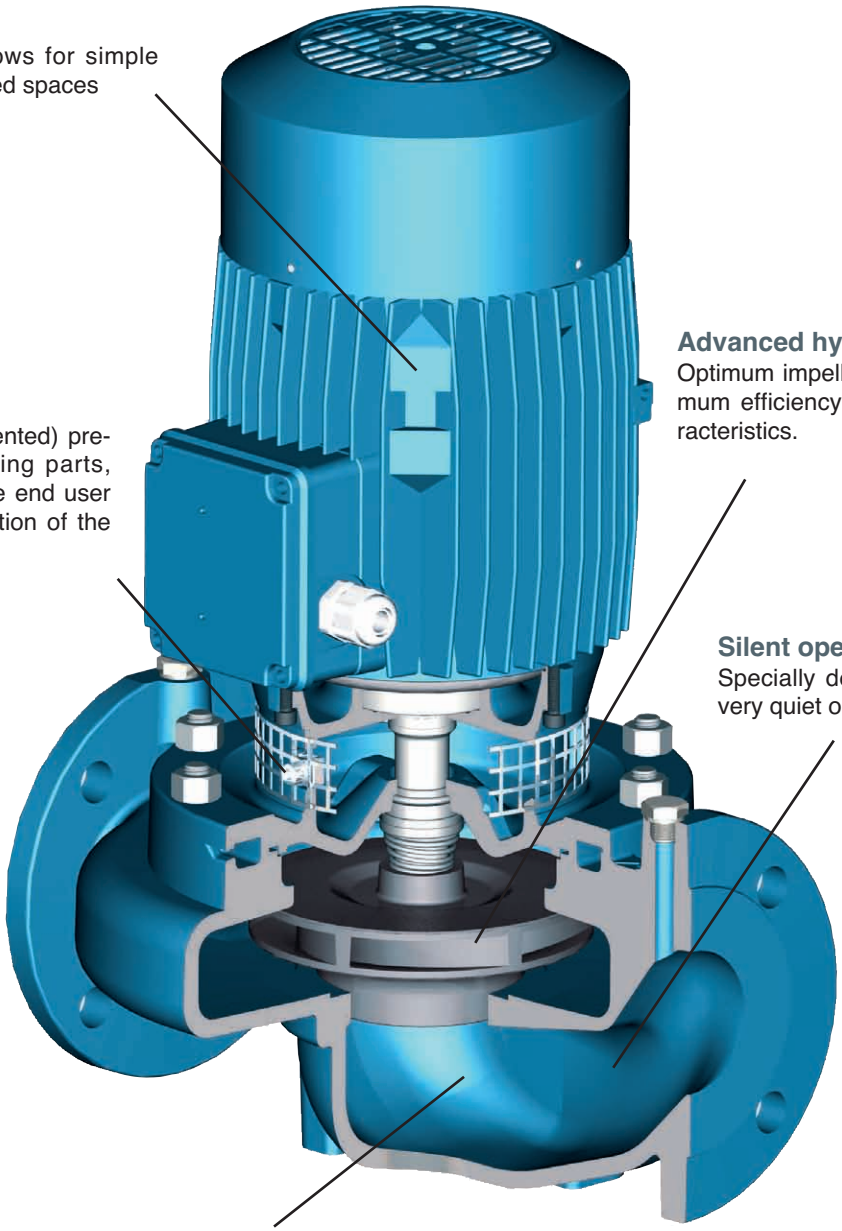

Advanced hydraulics
Optimum impeller geometry provides maximum efficiency and excellent suction characteristics.

Silent operation
Specially designed fluid ducts provide very quiet operation

Exceptional Fluid Dynamics
The fluid dynamics through the impeller and casing are designed to minimize losses and increase performance.

CALPEDA ROMANIA - INFINITY PUMPS SRL
Tel: 0268.33.47.47 / 0722.244.944
vanzari@calpeda.ro | www.calpeda.ro

MXH 2,4,8,16

Horizontal Multi-Stage Close Coupled Pumps in stainless steel

Construction

Horizontal multi-stage close coupled pumps in **chrome-nickel stainless steel**.
Compact and robust construction, without protruding flange and with single-piece lantern bracket and base.
Single-piece barrel casing, with front suction port above pumps axis and radial delivery at top.
Filling and draining plugs on the middle of the pump, accessible from any side (like the terminal box).

Version with frequency converter (on request)

Applications

For water supply.
For clean liquids, without abrasives, which are non-aggressive for stainless steel (with suitable seal materials, on request).
Universal pump, for domestic use, for civil and industrial applications, for garden use and irrigation.

Operating conditions

Liquid temperature from - 15 °C to + 110 °C.
Ambient temperature up to 40 °C.
Maximum permissible pressure in the pump casing: 8 bar.
Continuous duty.

Motor

2-pole induction motor, 50 Hz (n ≈ 2800 rpm).
MXH: three-phase 230/400 V ± 10% up to 3 kW;
400/690 V ± 10% from 3,7 to 4 kW.
MXHM: single-phase 230 V ± 10%, with thermal protector.
Capacitor inside the terminal box.
Insulation class F. Protection IP 54.
Motor suitable for operation with frequency converter from 1,1 kW.
Classification scheme IE3 for three-phase motors from 0,75 kW.
Constructed in accordance with: EN 60034-1; EN 60034-30-1.
EN 60335-1, EN 60335-2-41.

Materials

Component	Material
Pump casing	Chrome-nickel steel 1.4301 EN 10088 (AISI 304)
Stage casing	Chrome-nickel steel 1.4301 EN 10088 (AISI 304)
Wear ring	PTFE
Impeller	Chrome-nickel steel 1.4301 EN 10088 (AISI 304)
Casing cover	Chrome-nickel steel 1.4301 EN 10088 (AISI 304)
Spacer sleeve	Chrome-nickel steel 1.4301 EN 10088 (AISI 304)
Pump shaft	Chrome-nickel steel 1.4305 EN 10088 (AISI 303)
Plug	Chrome-nickel steel 1.4305 EN 10088 (AISI 303)
Mechanical seal with seat according to ISO 3069	Ceramic alumina, carbon, EPDM (Other materials on request)

Special features on request

- Other voltages. - Frequency 60 Hz (as per 60 Hz data sheet).
- Protection IP 55.
- Special mechanical seal
- Pump casing seal rings in FPM.
- Higher or lower liquid or ambient temperatures.
- Motor suitable for operation with frequency converter up to 0,75 kW.

Coverage chart n ≈ 2800 rpm

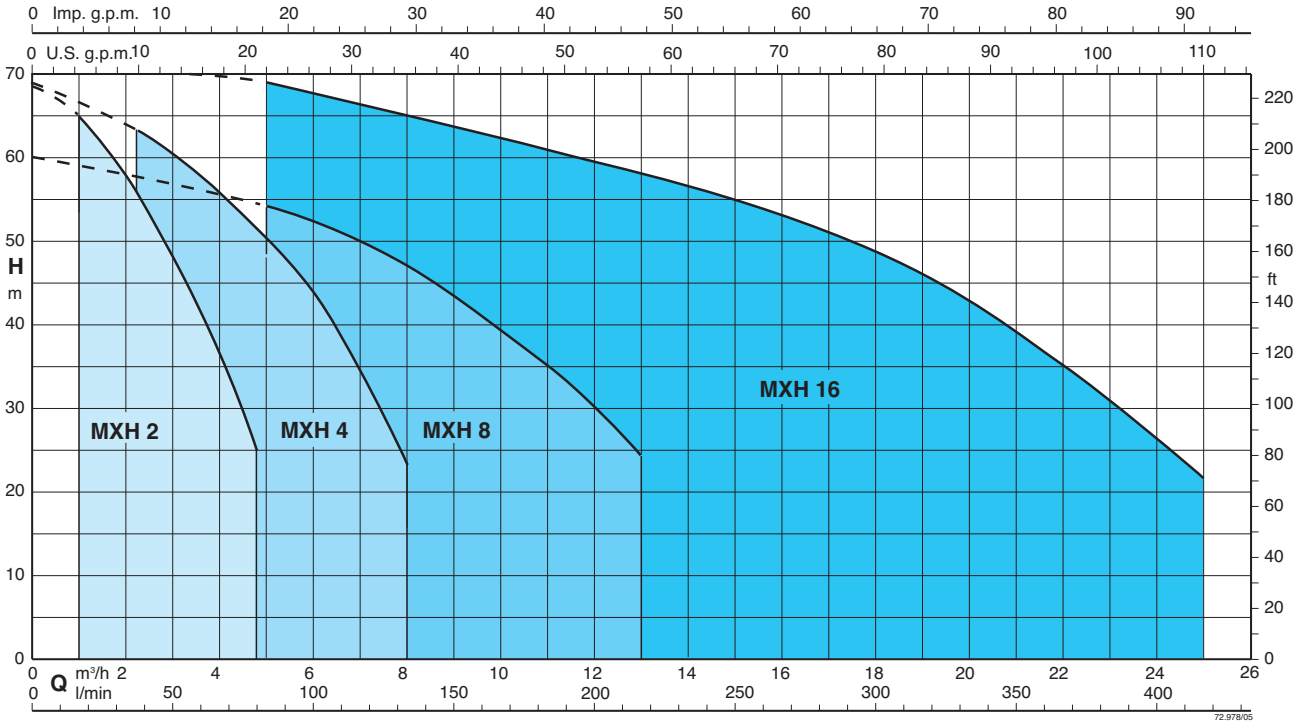

CALPEDA ROMANIA - INFINITY PUMPS SRL
Tel: 0268.33.47.47 / 0722.244.944
vanzari@calpeda.ro | www.calpeda.ro

MXH EI

Horizontal Multi-Stage Close Coupled Pumps in stainless steel

Pumps with frequency converter

The **MXH EI** pumps are available with power from 0,55 kW up to 4 kW, the pumps are equipped with **I-MAT** installed on board which allows to realize a variable-speed system extremely compact and efficient, ideal in applications of water supply and in the distribution of hot and cold water.
The pump is equipped with transducers suitable for operation and is already programmed at the factory.

Advantages
- Energy saving
- Compact design
- Easy to use
- Programmable to suit the system requirements
- Reliability

Costruction
The system comprises of:
- Pump
- Induction motor
- I-MAT Frequency converter
- Motor adapter for the motor mounting of the frequency converter
- Connection cable between frequency converter and induction motor
- Transducers

Main features
Rated motor power output from 0,55 kW to 4 kW
Control range from 1750 to 2900 rpm (2-pole)
Protection against dry running
Protection against operations with closed valve ports
Protection against system leakages
Protection against overcurrent in the motor
Protection agains overvoltage and undervoltage of the power supply
Protection against current unbalances between phases

Operating modes

Constant pressure mode
with pressure transducer

In this mode, the system maintains the preset pressure when the flow required by the installation changes.

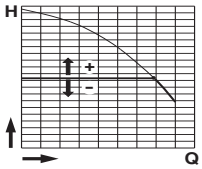

Proportional pressure mode
with pressure transducer

In this mode the system changes the working pressure according to the required flow rate.

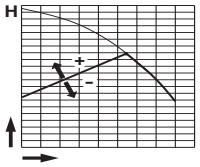

Constant flow mode
with flow meter

In this mode the system maintains a constant flow rate value in a point of the installation according to the required pressure.

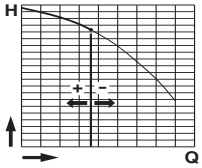

Fixed speed mode
with setting of the speed preferential rotation.

In this mode, by changing the working frequency, you may choose any operational curve included within the working range.

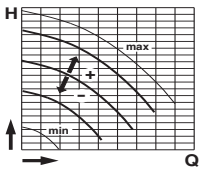

Constant temperature mode
with temperature transducer

In this mode the system keeps the temperature constant inside a system by changing the speed of the pump.

CALPEDA ROMANIA - INFINITY PUMPS SRL
Tel: 0268.33.47.47 / 0722.244.944
vanzari@calpeda.ro | www.calpeda.ro

MXH 2,4,8,16

Horizontal Multi-Stage Close Coupled Pumps in stainless steel

Performance n ≈ 2800 rpm

3 ~	230 V	400 V	1 ~	230 V	P_1	P_2		Q m³/h	0	1	1,5	2	2,5	3	3,5	4	4,25	4,8
	A	A		A	kW	kW	HP	Q l/min	0	16,6	25	33,3	41,6	50	58,3	66,6	70,8	80
MXH 202E	1,7	1	**MXHM 202E**	2,3	0,5	0,33	0,45	H m	22	20	18,5	17	15,3	13,4	11,4	9,3	8,2	5,6
MXH 203E	2,4	1,4	**MXHM 203E**	3	0,65	0,45	0,6		33	31	29	27	24,5	21,7	18,6	15,5	13,8	9
MXH 204/A	2,8	1,6	**MXHM 204/A**	4,2	0,9	0,55	0,75		45	42,5	40,4	37,5	34,5	30,8	26,7	22,4	20,1	14,8
MXH 205/B	3,5	2	**MXHM 205/A**	5,4	1,2	0,75	1		57	53,5	50,5	47,5	43,5	39	34	28,5	25,8	19
MXH 206/C	4,7	2,7	**MXHM 206**	7,4	1,5	1,1	1,5		68,5	65	61,5	58	53,5	48	43	36,5	33,5	25

3 ~	230 V	400 V	1 ~	230 V	P_1	P_2		Q m³/h	0	2,25	3	3,5	4	4,5	5	6	7	8
	A	A		A	kW	kW	HP	Q l/min	0	37,5	50	58,3	66,6	75	83,3	100	116	133
MXH 402E	2,4	1,4	**MXHM 402E**	3	0,65	0,45	0,6	H m	22,5	20	19	18,5	17,5	16	15	12,5	9,5	6
MXH 403/A	2,8	1,6	**MXHM 403/A**	4,2	0,9	0,55	0,75		33	30	29	27,5	26	24,5	23	19,5	15	9,5
MXH 404/B	3,5	2	**MXHM 404/A**	5,4	1,2	0,75	1		44,5	40,5	38	36,5	35	33	31	26	20	12,5
MXH 405/C	4,7	2,7	**MXHM 405**	7,4	1,5	1,1	1,5		56,5	52	50	47,5	45,5	43	40	33,5	26	16,5
MXH 406/A	6,2	3,6	**MXHM 406**	9,2	2	1,5	2		68,5	63	60	58	56	53,5	51	44	35	23

3 ~	230 V	400 V	1 ~	230 V	P_1	P_2		Q m³/h	0	5	6	7	8	9	10	11	12	13
	A	A		A	kW	kW	HP	Q l/min	0	83,3	100	116	133	150	166	183	200	216
MXH 802/B	3,5	2	**MXHM 802/A**	5,4	1,2	0,75	1	H m	22,5	20,5	20	19	18	16,5	15	13	11	8,5
MXH 803/A	4,7	2,7	**MXHM 803**	7,4	1,5	1,1	1,5		36	32	30,5	29	27,5	25,5	23	20	17	14
MXH 804/A	6,2	3,6	**MXHM 804**	9,2	2	1,5	2		48	42,5	41	39	37	34,5	32	28	24	19,5
MXH 805/B	8,3	4,8	**MXHM 805**	11,2	2,5	1,8	2,5		60	54	52	49,5	47	43,5	39,5	35	29,5	24

3 ~	230 V	400 V		P_2		Q m³/h	0	5	8	11	14	16	18	20	22	25
	A	A		kW	HP	Q l/min	0	83,3	133	183	233	266	300	333	366	416
MXH 1602/A	6,2	3,6		1,5	2	H m	24	23	21,7	20,5	18,8	17,5	15,8	14	11,5	6,5
MXH 1603/B	8,3	4,8		1,8	2,5		36	34	31,8	29,5	26,8	24,8	22,4	19,2	15,3	8,8
MXH 1604/A	11,5	6,6		3	4		48	46,5	44,5	41,5	38	36	33	29	23	14
MXH 1605/B		9,6		3,7	5		60	57,5	55	51,5	48	45	42	37,5	31,5	19
MXH 1606/B		9,6		4	5,5		71	68	65	61	56	53	49	44	36	22

P_1 Max. power input.
P_2 Rated motor power output.

Test results with clean cold water, without gas content.
Tolerances according to UNI EN ISO 9906:2012

+ 0,5 m security margin on NPSH-value is necessary.

CALPEDA ROMANIA - INFINITY PUMPS SRL
Tel: 0268.33.47.47 / 0722.244.944
vanzari@calpeda.ro | www.calpeda.ro

MXH 2,4,8,16

Horizontal Multi-Stage Close Coupled Pumps
in stainless steel

Characteristic curves n ≈ 2800 rpm

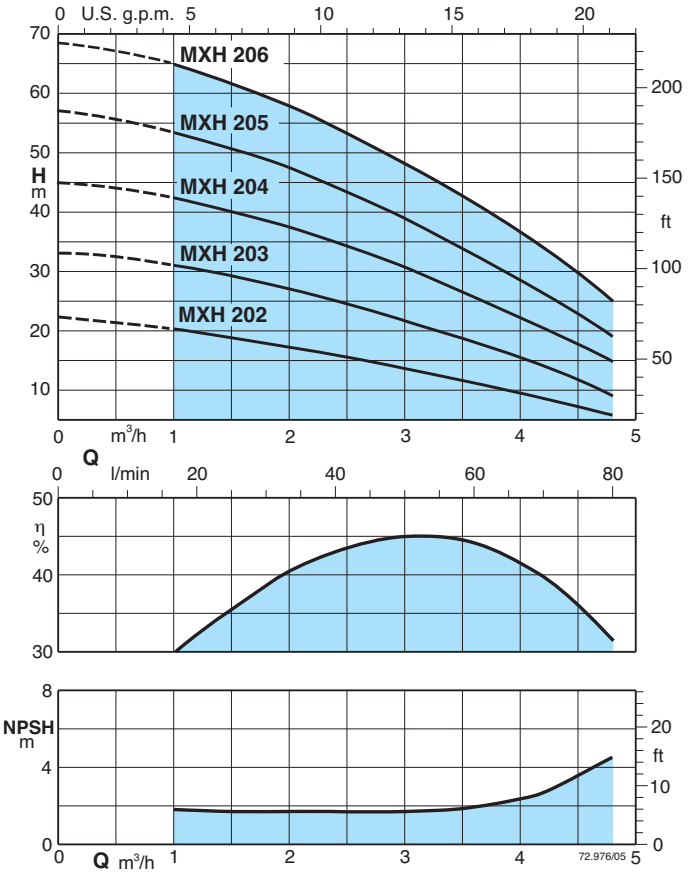

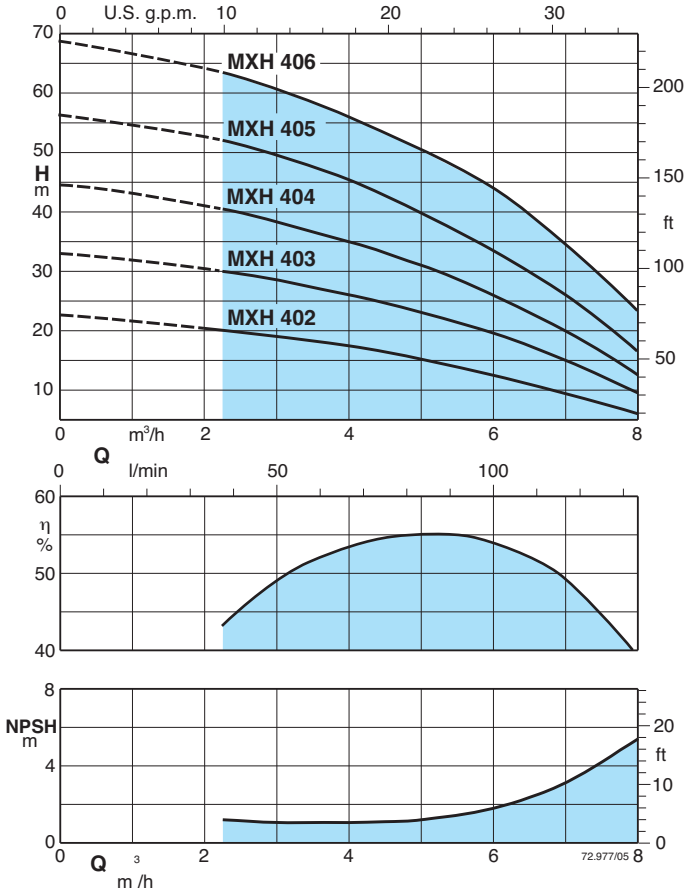

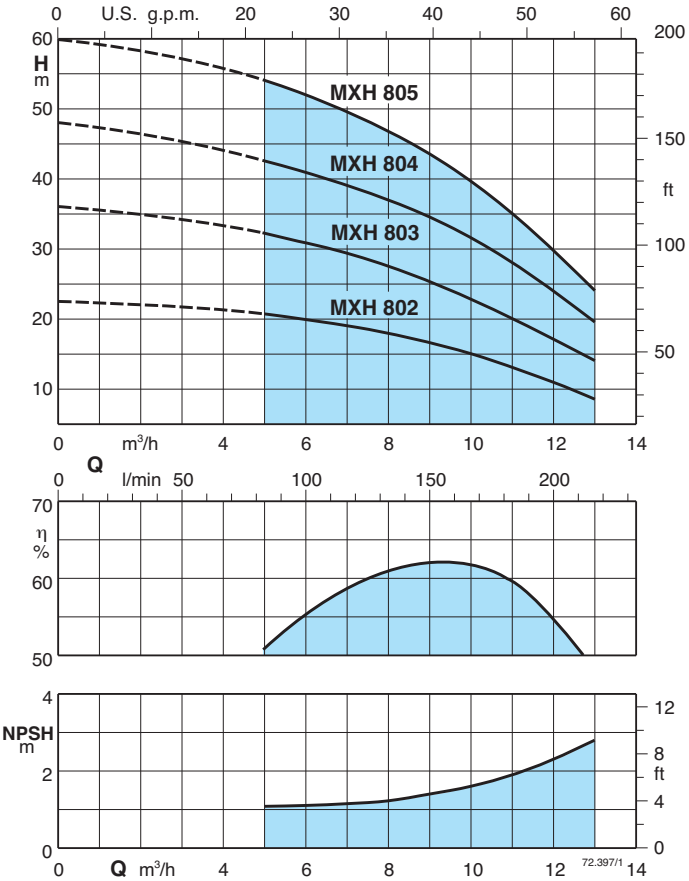

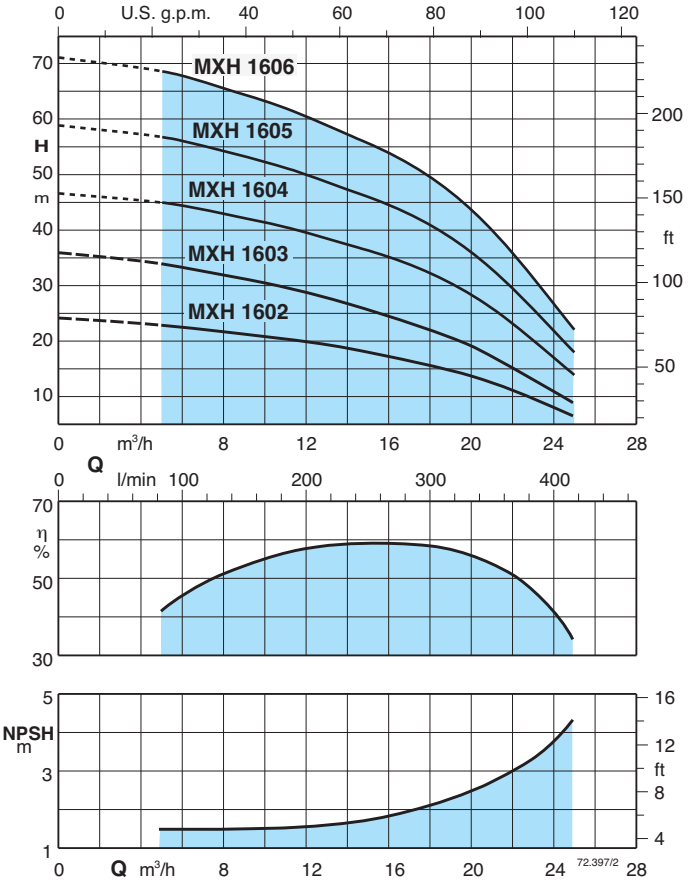

CALPEDA ROMANIA - INFINITY PUMPS SRL
Tel: 0268.33.47.47 / 0722.244.944
vanzari@calpeda.ro | www.calpeda.ro

MXH 2,4,8,16

Horizontal Multi-Stage Close Coupled Pumps in stainless steel

Dimensions and weights

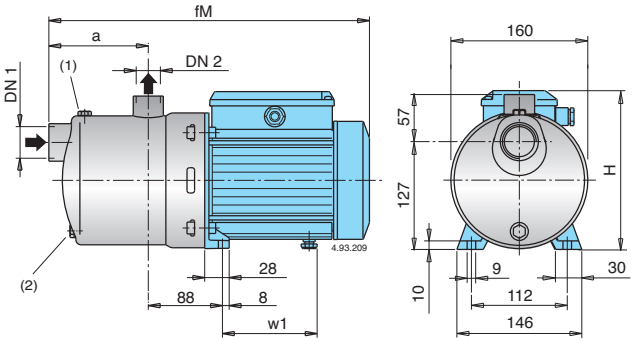

TYPE	DN1 ISO 228	DN2 ISO 228	mm				kg	
			fM	a	H	w1	MXH	MXHM
MXH 202E - MXHM 202E	G 1 1/4	G 1	331	94	176	98,5	6,8	6,9
MXH 203E - MXHM 203E	G 1 1/4	G 1	331	94	176	98,5	7,6	7,7
MXH 204/A - MXHM 204/A	G 1 1/4	G 1	381	118	193	112	10	11
MXH 205/B - MXHM 205/A	G 1 1/4	G 1	405	142	193	112	12,3	12,5
MXH 402E - MXHM 402E	G 1 1/4	G 1	331	94	176	98,5	7,6	7,7
MXH 403/A - MXHM 403/A	G 1 1/4	G 1	357	94	193	112	9,3	10,3
MXH 404/B - MXHM 404/A	G 1 1/4	G 1	381	118	193	112	11,6	11,8
MXH 802/B - MXHM 802/A	G 1 1/2	G 1	381	118	193	112	11,4	11,6

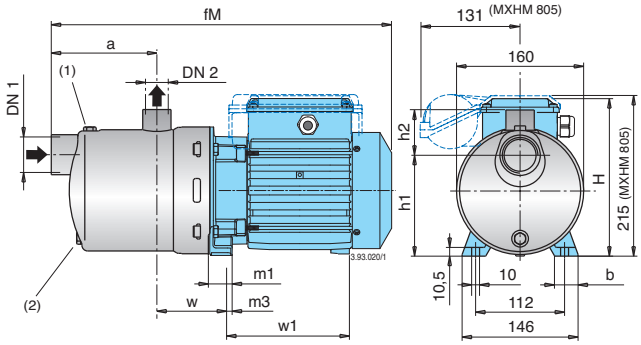

TYPE	DN1 ISO 228	DN2 ISO 228	mm										kg	
			fM	a	w	H	h1	h2	m1	m3	b	w1	MXH	MXHM
MXH 206/C - MXHM 206	G 1 1/4	G 1	500	166	88	210	127	57	31	10	30,5	167	18,5	18,6
MXH 405/C - MXHM 405	G 1 1/4	G 1	476	142	88	210	127	57	31	10	30,5	167	18	18
MXH 406/A - MXHM 406	G 1 1/4	G 1	500	166	88	210	127	57	31	10	30,5	167	19,5	20,5
MXH 803/A - MXHM 803	G 1 1/2	G 1	452	118	88	210	127	57	31	10	30,5	167	15,8	16,9
MXH 804/A - MXHM 804	G 1 1/2	G 1	482	148	88	210	127	57	31	10	30,5	167	18,2	19,2
MXH 805/B - MXHM 805	G 1 1/2	G 1	552	178	88	210	127	57	31	10	30,5	207	21,4	22,4
MXH 1602/A	G 2	G 1 1/2	476	128	101	210	117	70	31	10	30,5	167	18,2	-
MXH 1603/B	G 2	G 1 1/2	516	128	101	210	117	70	31	10	30,5	207	20,8	-
MXH 1604/A	G 2	G 1 1/2	612	166	113	235	132	70	44	12	38	232	33,8	-
MXH 1605/B	G 2	G 1 1/2	650	203	113	235	132	70	44	12	38	232	35,5	-
MXH 1606/B	G 2	G 1 1/2	687	241	113	235	132	70	44	12	38	232	36,4	-

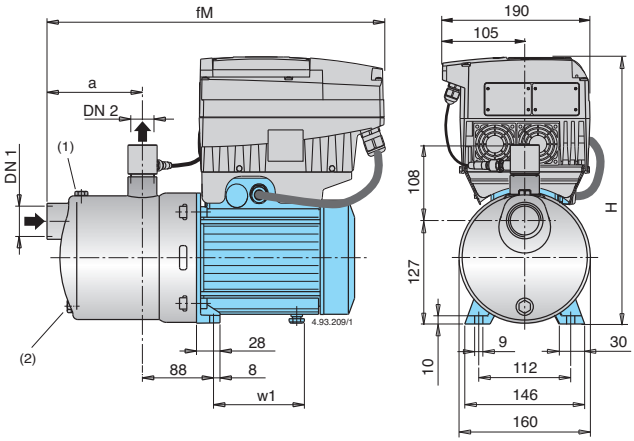

TYPE	DN1 ISO 228	DN2 ISO 228	mm				kg
			fM	a	H	w1	
MXH EI 204/A	G 1 1/4	G 1	444	118	349	112	16,4
MXH EI 205/B	G 1 1/4	G 1	468	142	349	112	17,9
MXH EI 403/A	G 1 1/4	G 1	420	94	349	112	15,7
MXH EI 404/B	G 1 1/4	G 1	444	118	349	112	17,2
MXH EI 802/B	G 1 1/2	G 1	444	118	349	112	17,0

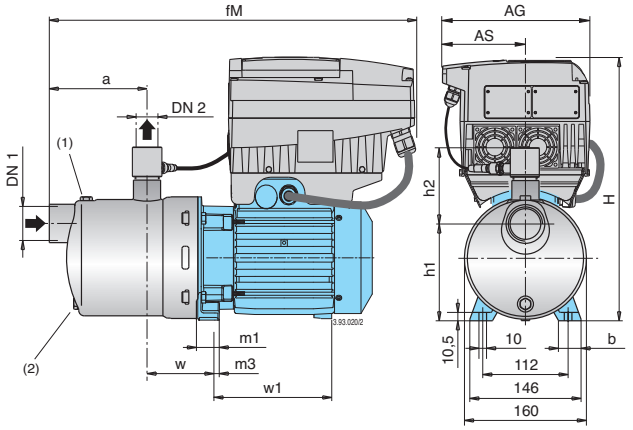

TYPE	DN1 ISO 228	DN2 ISO 228	mm												kg
			fM	AG	AS	a	w	H	h1	h2	m1	m3	b	w1	
MXH EI 206/C	G 1 1/4	G 1	532	190	105	166	88	368	127	108	31	10	30,5	167	24,9
MXH EI 405/C	G 1 1/4	G 1	508	190	105	142	88	368	127	108	31	10	30,5	167	24,4
MXH EI 406/A	G 1 1/4	G 1	532	190	105	166	88	368	127	108	31	10	30,5	167	25,9
MXH EI 803/A	G 1 1/2	G 1	484	190	105	118	88	368	127	108	31	10	30,5	167	22,2
MXH EI 804/A	G 1 1/2	G 1	514	190	105	148	88	368	127	108	31	10	30,5	167	24,6
MXH EI 805/B	G 1 1/2	G 1	552	190	105	178	88	368	127	108	31	10	30,5	207	27,8
MXH EI 1602/A	G 2	G 1 1/2	508	190	105	128	101	368	117	122	31	10	30,5	167	24,6
MXH EI 1603/B	G 2	G 1 1/2	516	190	105	128	101	368	117	122	31	10	30,5	207	27,2
MXH EI 1604/A	G 2	G 1 1/2	627	210	118	166	113	391	132	122	44	12	38	232	41,3
MXH EI 1605/B	G 2	G 1 1/2	665	210	118	203	113	391	132	122	44	12	38	232	43,0
MXH EI 1606/B	G 2	G 1 1/2	702	210	118	241	113	391	132	122	44	12	38	232	43,9

(1) Filling (2) Draining

CALPEDA ROMANIA - INFINITY PUMPS SRL
Tel: 0268.33.47.47 / 0722.244.944
vanzari@calpeda.ro | www.calpeda.ro

MXH 2,4,8,16

Horizontal Multi-Stage Close Coupled Pumps
in stainless steel

Features

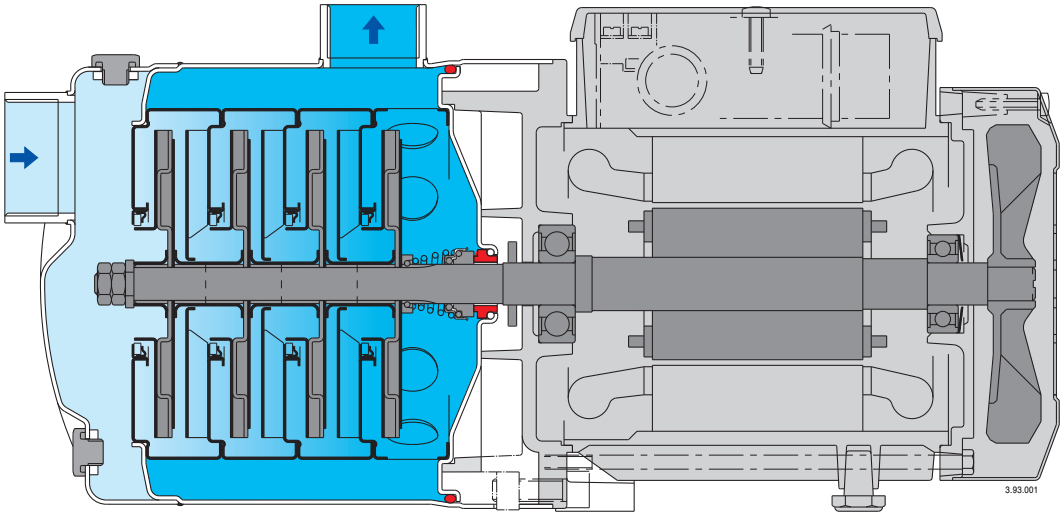

Extra safety
against running dry, with the suction port above pump axis.

Reliable
All hydraulic parts in contact with the pumped liquid are of stainless steel.
For liquids from -15 °C to 110 °C.

Robust
Single-piece, thick barrel casing.

Compact
Single-piece lantern bracket and base.
Without protruding flange.

Greater protection
against leakage, with the pump casing cover separated from the motor shield.
Possibility of inspecting the seal through the side apertures between the two walls.
Greater protection against water entering the motor from outside provided by an extension of the pump casing around the lantern bracket.

CALPEDA ROMANIA - INFINITY PUMPS SRL
Tel: 0268.33.47.47 / 0722.244.944
vanzari@calpeda.ro | www.calpeda.ro

MXHL AISI 316L

Horizontal Multi-Stage Close Coupled Pumps

Construction

Horizontal multi-stage close coupled pumps in **chrome-nickel-molybdenum stainless steel AISI 316L**.
Compact and robust construction, without protruding flange and with single-piece lantern bracket and base.
Single-piece barrel casing, with front suction port above pumps axis and radial delivery at top.
Filling and draining plugs on the middle of the pump, accessible from any side (like the terminal box).

Applications

For water supply.
For clean liquids, without abrasives, which are non-aggressive for stainless steel (with suitable seal materials, on request).
Universal pump, for domestic use, for civil and industrial applications, for garden use and irrigation.

Operating conditions

Liquid temperature from - 15 °C to + 110 °C.
Ambient temperature up to 40 °C.
Maximum permissible pressure in the pump casing: 8 bar.
Continuous duty.

Motor

2-pole induction motor, 50 Hz (n ≈ 2800 rpm).
MXHL: three-phase 230/400 V ± 10%.
MXHLM: single-phase 230 V ± 10%, with thermal protector. Capacitor inside the terminal box.
Insulation class F. Protection IP 54.
Motor suitable for operation with frequency converter from 1,1 kW.
Classification scheme IE3 for three-phase motors from 0,75 kW.
Constructed in accordance with: EN 60034-1; EN 60034-30-1. EN 60335-1, EN 60335-2-41.

Materials

Component	Material
Pump casing	Cr-Ni-Mo steel 1.4404 EN 10088 (AISI 316L)
Stage casing	Cr-Ni-Mo steel 1.4404 EN 10088 (AISI 316L)
Wear ring	PTFE
Impeller	Cr-Ni-Mo steel 1.4404 EN 10088 (AISI 316L)
Casing cover	Cr-Ni-Mo steel 1.4404 EN 10088 (AISI 316L)
Spacer sleeve	Cr-Ni-Mo steel 1.4404 EN 10088 (AISI 316L)
Pump shaft	Cr-Ni-Mo steel 1.4404 EN 10088 (AISI 316L)
Plug	Cr-Ni-Mo steel 1.4404 EN 10088 (AISI 316L)
Mechanical seal with seat according to ISO 3069	Ceramic alumina, carbon, EPDM (Other materials on request)

Special features on request

- Other voltages.
- Frequency 60 Hz (as per 60 Hz data sheet).
- Protection IP 55.
- Special mechanical seal
- Pump casing seal rings in FPM.
- Higher or lower liquid or ambient temperatures.
- Motor suitable for operation with frequency converter up to 0,75 kW.

Coverage chart n ≈ 2800 rpm

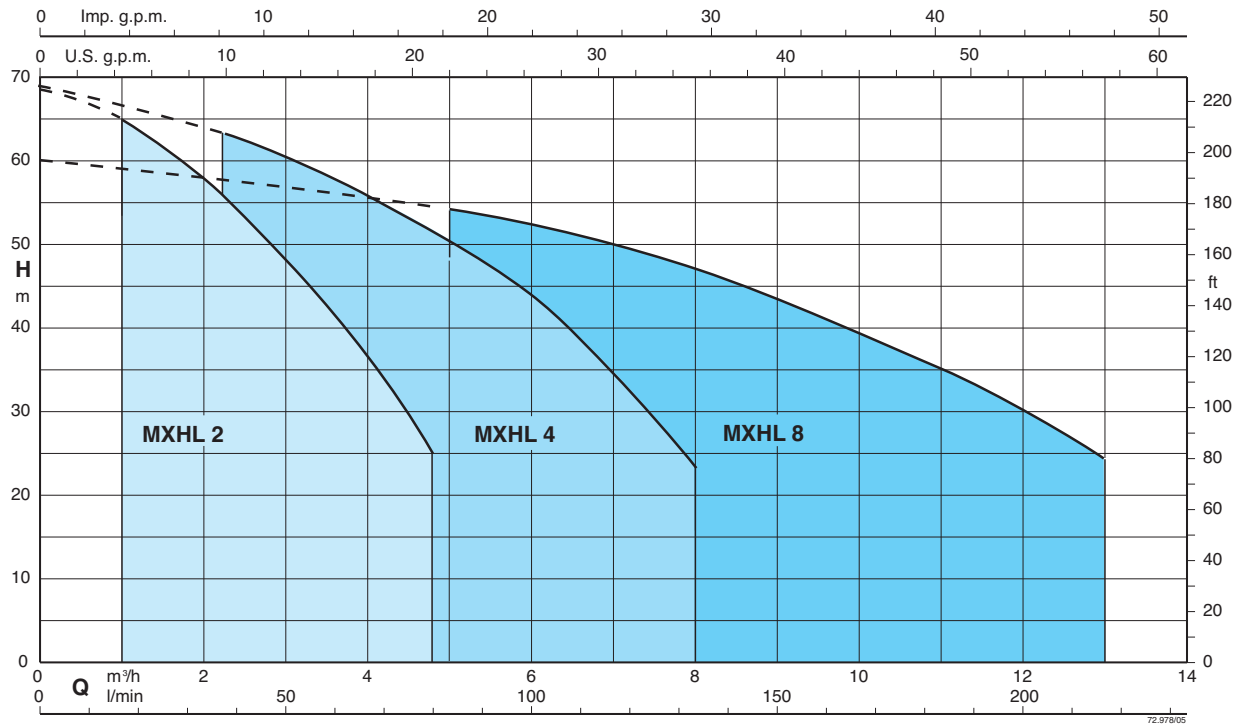

CALPEDA ROMANIA - INFINITY PUMPS SRL
Tel: 0268.33.47.47 / 0722.244.944
vanzari@calpeda.ro | www.calpeda.ro

MXHL AISI 316L

Horizontal Multi-Stage Close Coupled Pumps

calpeda

Performance n ≈ 2800 rpm

3 ~	230 V	400 V	1 ~	230 V	P_1	P_2		Q m³/h	0	1	1,5	2	2,5	3	3,5	4	4,25	4,8
	A	A		A	kW	kW	HP	Q l/min	0	16,6	25	33,3	41,6	50	58,3	66,6	70,8	80
MXHL 202E	1,7	1	**MXHLM 202E**	2,3	0,5	0,33	0,45	H m	22	20	18,5	17	15,3	13,4	11,4	9,3	8,2	5,6
MXHL 203E	2,4	1,4	**MXHLM 203E**	3	0,65	0,45	0,6		33	31	29	27	24,5	21,7	18,6	15,5	13,8	9
MXHL 204/A	2,8	1,6	**MXHLM 204/A**	4,2	0,9	0,55	0,75		45	42,5	40,4	37,5	34,5	30,8	26,7	22,4	20,1	14,8
MXHL 205/B	3,5	2	**MXHLM 205/A**	5,4	1,2	0,75	1		57	53,5	50,5	47,5	43,5	39	34	28,5	25,8	19
MXHL 206/C	4,7	2,7	**MXHLM 206**	7,4	1,5	1,1	1,5		68,5	65	61,5	58	53,5	48	43	36,5	33,5	25

3 ~	230 V	400 V	1 ~	230 V	P_1	P_2		Q m³/h	0	2,25	3	3,5	4	4,5	5	6	7	8
	A	A		A	kW	kW	HP	Q l/min	0	37,5	50	58,3	66,6	75	83,3	100	116	133
MXHL 402E	2,4	1,4	**MXHLM 402E**	3	0,65	0,45	0,6	H m	22,5	20	19	18,5	17,5	16	15	12,5	9,5	6
MXHL 403/A	2,8	1,6	**MXHLM 403/A**	4,2	0,9	0,55	0,75		33	30	29	27,5	26	24,5	23	19,5	15	9,5
MXHL 404/B	3,5	2	**MXHLM 404/A**	5,4	1,2	0,75	1		44,5	40,5	38	36,5	35	33	31	26	20	12,5
MXHL 405/C	4,7	2,7	**MXHLM 405**	7,4	1,5	1,1	1,5		56,5	52	50	47,5	45,5	43	40	33,5	26	16,5
MXHL 406/A	6,2	3,6	**MXHLM 406**	9,2	2	1,5	2		68,5	63	60	58	56	53,5	51	44	35	23

3 ~	230 V	400 V	1 ~	230 V	P_1	P_2		Q m³/h	0	5	6	7	8	9	10	11	12	13
	A	A		A	kW	kW	HP	Q l/min	0	83,3	100	116	133	150	166	183	200	216
MXHL 802/B	3,5	2	**MXHLM 802/A**	5,4	1,2	0,75	1	H m	22,5	20,5	20	19	18	16,5	15	13	11	8,5
MXHL 803/A	4,7	2,7	**MXHLM 803**	7,4	1,5	1,1	1,5		36	32	30,5	29	27,5	25,5	23	20	17	14
MXHL 804/A	6,2	3,6	**MXHLM 804**	9,2	2	1,5	2		48	42,5	41	39	37	34,5	32	28	24	19,5
MXHL 805/B	8,3	4,8	**MXHLM 805**	11,2	2,5	1,8	2,5		60	54	52	49,5	47	43,5	39,5	35	29,5	24

P_1 Max. power input.
P_2 Rated motor power output.

Test results with clean cold water, without gas content.
Tolerances according to UNI EN ISO 9906:2012

+ 0,5 m security margin on NPSH-value is necessary.

Dimensions and weights

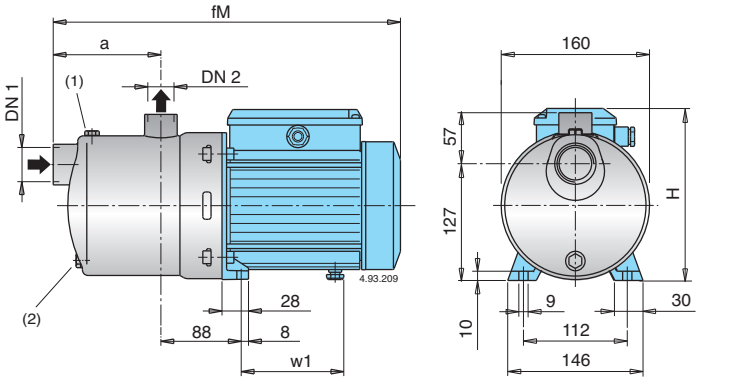

TYPE	DN1	DN2	mm				kg	
	ISO 228		fM	a	H	w1	MXHL	MXHLM
MXHL 202E - MXHLM 202E	G 1 1/4	G 1	331	94	176	98,5	6,8	6,9
MXHL 203E - MXHLM 203E	G 1 1/4	G 1	331	94	176	98,5	7,6	7,7
MXHL 204/A - MXHLM 204/A	G 1 1/4	G 1	381	118	193	112	10	11
MXHL 205/B - MXHLM 205/A	G 1 1/4	G 1	405	142	193	112	12,3	12,5
MXHL 402E - MXHLM 402E	G 1 1/4	G 1	331	94	176	98,5	7,6	7,7
MXHL 403/A - MXHLM 403/A	G 1 1/4	G 1	357	94	193	112	9,3	10,3
MXHL 404/B - MXHLM 404/A	G 1 1/4	G 1	381	118	193	112	11,6	11,8
MXHL 802/B - MXHLM 802/A	G 1 1/2	G 1	381	118	193	112	11,4	11,6

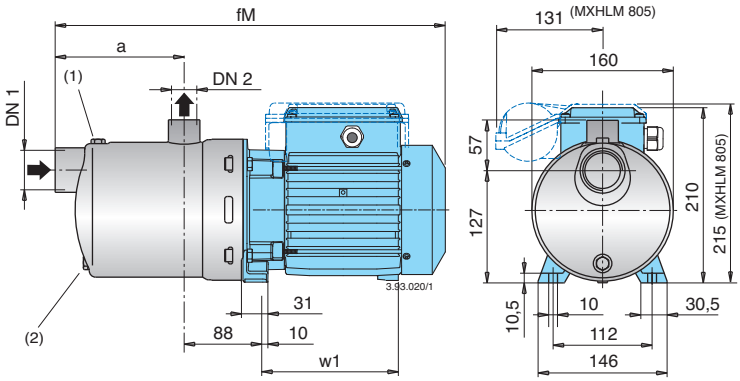

TYPE	DN1	DN2	mm			kg	
	ISO 228		fM	a	w1	MXHL	MXHLM
MXHL 206/C - MXHLM 206	G 1 1/4	G 1	500	166	167	18,5	18,6
MXHL 405/C - MXHLM 405	G 1 1/4	G 1	476	142	167	18	18
MXHL 406/A - MXHLM 406	G 1 1/4	G 1	500	166	167	19,5	20,5
MXHL 803/A - MXHLM 803	G 1 1/2	G 1	452	118	167	15,8	16,9
MXHL 804/A - MXHLM 804	G 1 1/2	G 1	482	148	167	18,2	19,2
MXHL 805/B - MXHLM 805	G 1 1/2	G 1	552	178	207	21,4	22,4

(1) Filling (2) Draining

CALPEDA ROMANIA - INFINITY PUMPS SRL
Tel: 0268.33.47.47 / 0722.244.944
vanzari@calpeda.ro | www.calpeda.ro

MXHL AISI 316L

Horizontal Multi-Stage Close Coupled Pumps

calpeda®

Characteristic curves n ≈ 2800 rpm

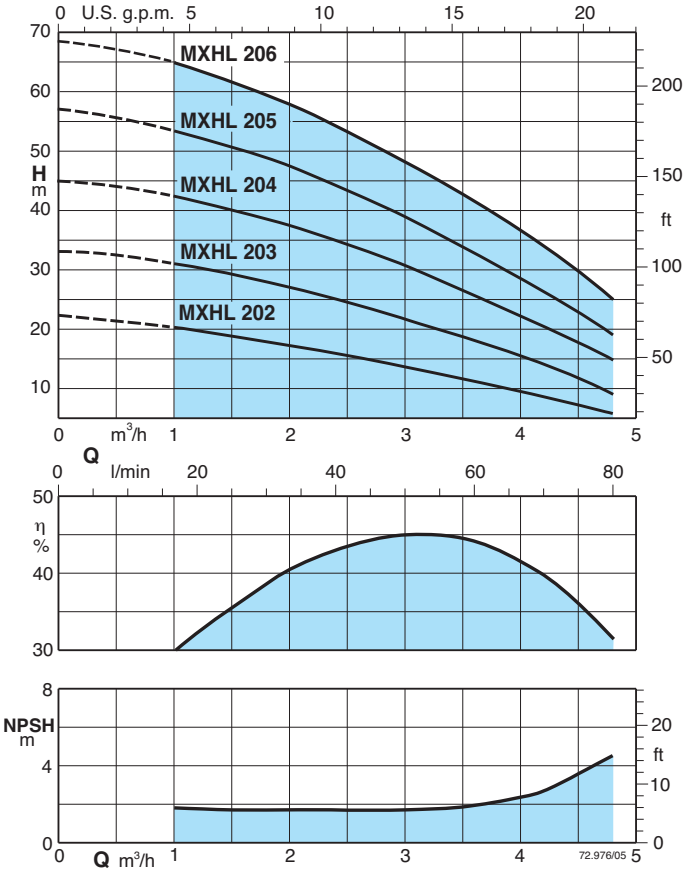

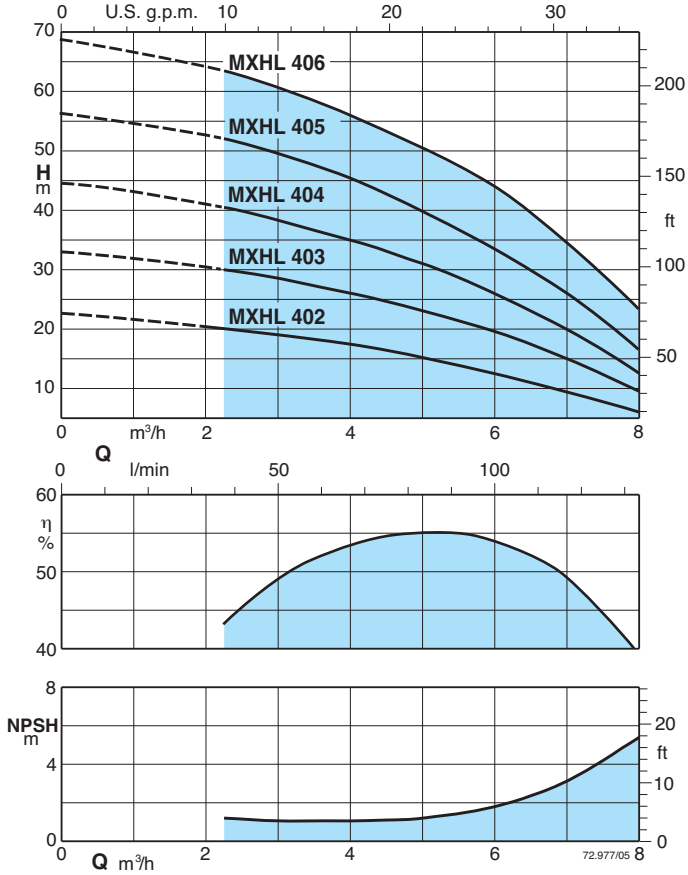

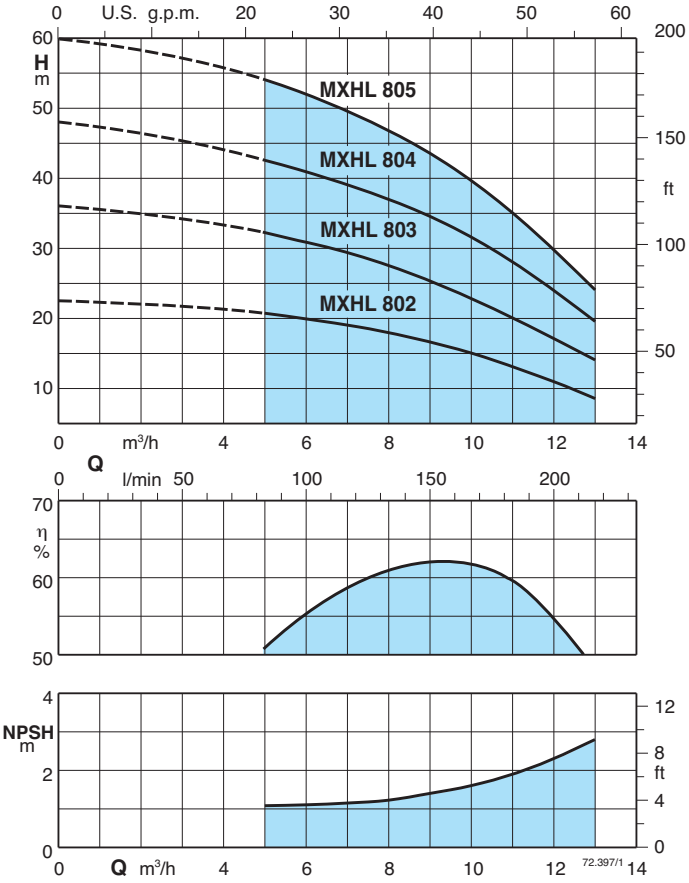

CALPEDA ROMANIA - INFINITY PUMPS SRL
Tel: 0268.33.47.47 / 0722.244.944
vanzari@calpeda.ro | www.calpeda.ro

MXHL AISI 316L

Horizontal Multi-Stage Close Coupled Pumps

Features

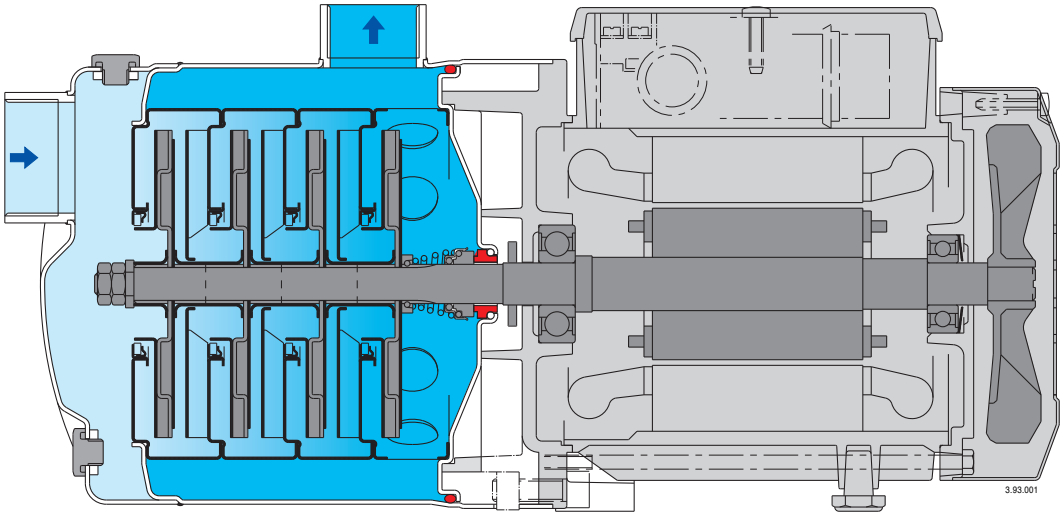

Extra safety
against running dry, with the suction port above pump axis.

Reliable
All hydraulic parts in contact with the pumped liquid are of stainless steel.
For liquids from -15 °C to 110 °C.

Robust
Single-piece, thick barrel casing.

Compact
Single-piece lantern bracket and base.
Without protruding flange.

Greater protection
against leakage, with the pump casing cover separated from the motor shield.
Possibility of inspecting the seal through the side apertures between the two walls.
Greater protection against water entering the motor from outside provided by an extension of the pump casing around the lantern bracket.

CALPEDA ROMANIA - INFINITY PUMPS SRL
Tel: 0268.33.47.47 / 0722.244.944
vanzari@calpeda.ro | www.calpeda.ro

MXH 20,32,48

Horizontal Multi-Stage Close Coupled Pumps

Construction

Horizontal multi-stage close coupled pumps in **chrome-nickel stainless steel**.
Compact and robust construction,with compact lantern bracket and motor with feet.
Single-piece barrel casing, with front suction port above pumps axis and radial delivery at top.
Filling and draining plugs on the middle of the pump, accessible from any side (like the terminal box).

Version with frequency converter (on request)

Applications

For water supply.
For clean liquids, without abrasives, which are non-aggressive for stainless steel (with suitable seal materials, on request).
Universal pump, for civil and industrial applications, for garden use and irrigation.

Operating conditions

Liquid temperature from - 15 °C to + 110 °C.
Ambient temperature up to 40 °C.
Maximum permissible pressure in the pump casing: 10 bar.

Motor

2-pole induction motor, 50 Hz (n ≈ 2900 rpm).
MXH: three-phase 230/400 V ± 10% up to 3 kW;
400/690 V ± 10% from 4 to 7,5 kW.
Insulation class F. Protection IP 54.
Motor suitable for operation with frequency converter.
Classification scheme IE3 for three-phase motors from 0,75 kW.
Constructed in accordance with: EN 60034-1;
EN 60034-30-1.

Materials

Component	Material
Pump casing	Chrome-nickel steel 1.4301 EN 10088 (AISI 304)
Stage casing	Chrome-nickel steel 1.4301 EN 10088 (AISI 304)
Wear ring	PTFE
Impeller	Chrome-nickel steel 1.4301 EN 10088 (AISI 304)
Casing cover	Chrome-nickel steel 1.4301 EN 10088 (AISI 304)
Spacer sleeve	Chrome-nickel steel 1.4301 EN 10088 (AISI 304)
Pump shaft	Chrome-nickel steel 1.4401 EN 10088 (AISI 316)
Plug	Chrome-nickel steel 1.4305 EN 10088 (AISI 303)
Mechanical seal with seat according to ISO 3069-KU	Ceramic alumina, carbon, EPDM (Other materials on request)

Special features on request

- Pump with Victaulic ports (MXH-**V**).
- Pump with flanged ports (MXH-**F**).
- Other voltages.
- Frequency 60 Hz (as per 60 Hz data sheet).
- Protection IP 55.
- Special mechanical seal
- Seal rings in FPM.
- Higher or lower lambient temperatures.

Coverage chart n ≈ 2900 rpm

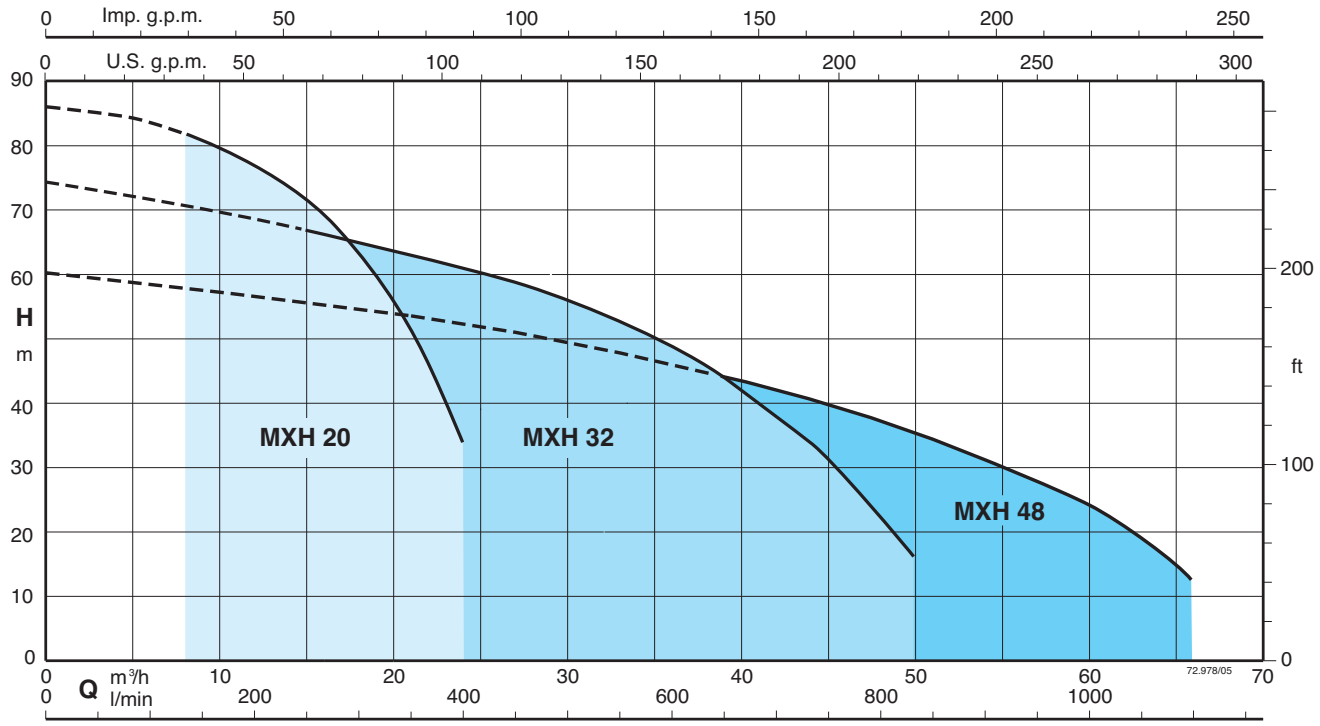

CALPEDA ROMANIA - INFINITY PUMPS SRL
Tel: 0268.33.47.47 / 0722.244.944
vanzari@calpeda.ro | www.calpeda.ro

MXH EI

Horizontal Multi-Stage Close Coupled Pumps

Pumps with frequency converter

The **MXH EI** pumps are available with power from 1,1 kW up to 7,5 kW, the pumps are equipped with **I-MAT** installed on board which allows to realize a variable-speed system extremely compact and efficient, ideal in applications of water supply and in the distribution of hot and cold water.
The pump is equipped with transducers suitable for operation and is already programmed at the factory.

Advantages
- Energy saving
- Compact design
- Easy to use
- Programmable to suit the system requirements
- Reliability

Costruction
The system comprises of:
- Pump
- Induction motor
- I-MAT Frequency converter
- Motor adapter for the motor mounting of the frequency converter
- Connection cable between frequency converter and induction motor
- Transducers

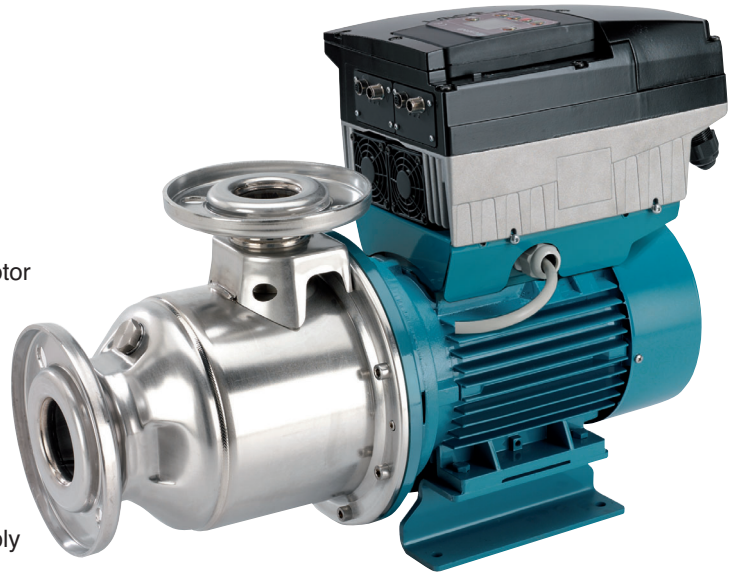

Main features
Rated motor power output from 1,1 kW to 7,5 kW
Control range from 1750 to 2900 rpm (2-pole)
Protection against dry running
Protection against operations with closed valve ports
Protection against system leakages
Protection against overcurrent in the motor
Protection agains overvoltage and undervoltage of the power supply
Protection against current unbalances between phases

Operating modes

Constant pressure mode
with pressure transducer

In this mode, the system maintains the preset pressure when the flow required by the installation changes.

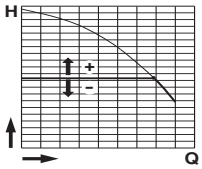

Proportional pressure mode
with pressure transducer

In this mode the system changes the working pressure according to the required flow rate.

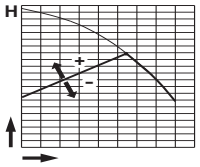

Constant flow mode
with flow meter

In this mode the system maintains a constant flow rate value in a point of the installation according to the required pressure.

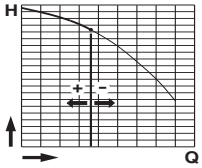

Fixed speed mode
with setting of the speed preferential rotation.

In this mode, by changing the working frequency, you may choose any operational curve included within the working range.

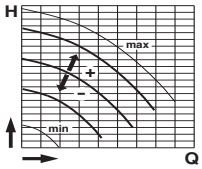

Constant temperature mode
with temperature transducer

In this mode the system keeps the temperature constant inside a system by changing the speed of the pump.

CALPEDA ROMANIA - INFINITY PUMPS SRL
Tel: 0268.33.47.47 / 0722.244.944
vanzari@calpeda.ro | www.calpeda.ro

MXH 20,32,48

Horizontal Multi-Stage Close Coupled Pumps

Performance n ≈ 2900 rpm

3 ~	230 V	400 V	P_2		Q m³/h	0	8	10	12	14	16	18	20	22	24
	A	A	kW	HP	l/min	0	133,3	166,6	200	233	266	300	333	366	400
MXH 2001/A	4,6	2,7	1,1	1,5	H m	17,6	15,7	15,1	14,4	13,5	12,4	11,1	9,5	7,6	5,4
MXH 2002/A	8,3	4,8	1,8	2,5		35,1	31,4	30,3	29,1	27,5	25,6	23,4	20,6	17,4	13,6
MXH 2003	11,5	6,6	3	4		54	48,5	46,9	45,2	43,2	40,8	37,7	33,8	28,8	22,3
MXH 2004/A	-	9,6	4	5,5		71,5	64,5	62,5	60,5	57,5	54,5	50	45	38	29
MXH 2005	-	10,8	5,5	7,5		89	81,5	79	76	72,5	68	63	56,5	48,5	36

3 ~	230 V	400 V	P_2		Q m³/h	0	15	21	24	27	30	33	36	39	44	50
	A	A	kW	HP	l/min	0	250	350	400	450	500	550	600	650	733	833
MXH 3201/B	9,2	5,3	2,2	3	H m	18,4	16,3	15,3	14,8	14	13	12	10,8	9,3	6	-
MXH 3202/B	-	9,6	4	5,5		37	33	31	30	28,5	27	25	23	20,5	15	7,5
MXH 3203/A	-	10,8	5,5	7,5		55,5	50	47	45,5	43	40,5	38	35	31	23	10
MXH 3204/A	-	14,3	7,5	10		74,5	67	63	61	59	56	53	49	44	34	16,5

3 ~	230 V	400 V	P_2		Q m³/h	0	21	27	33	39	45	48	51	54	60	66
	A	A	kW	HP	l/min	0	350	450	550	650	750	800	850	900	1000	1100
MXH 4801/A	11,5	6,6	3	4	H m	20	18	17	16	14,5	12,5	11,5	10,5	9,5	7	-
MXH 4802/A	-	10,8	5,5	7,5		41	35,3	33	30,5	27,5	24,5	22,5	21	19	14	7,5
MXH 4803/A	-	14,3	7,5	10		60,5	53	50	46	42,5	38	35	32,5	29	22,5	16

P_2 Rated motor power output. Test results with clean cold water, without gas content. + 0,5 m security margin on NPSH-value is necessary.
Tolerances according to UNI EN ISO 9906:2012

Dimensions and weights

Threaded ports MXH

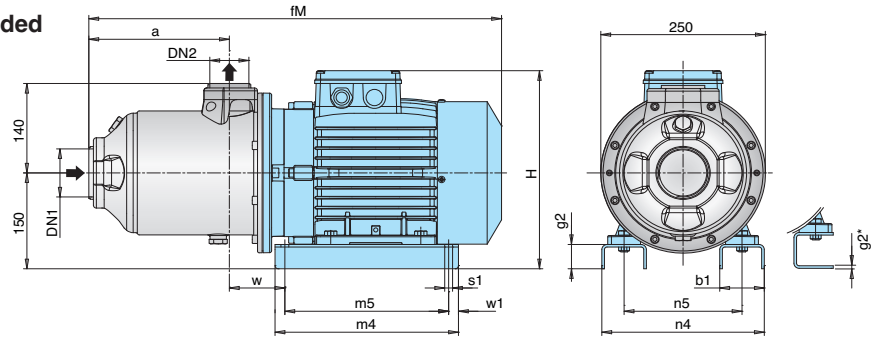

TYPE	DN1 ISO 228	DN2 ISO 228	mm fM	a	H	m4	m5	n4	n5	w1	b1	s1	w	g2	kg
MXH 2001/A	G 2	G 1 1/2	467	127	280	205	175	170	130	15	54	10	95	6*	26
MXH 2002/A	G 2	G 1 1/2	507	127	280	205	175	170	130	15	54	10	95	6*	30
MXH 2003	G 2	G 1 1/2	540	146	290	205	175	180	140	15	54	10	112	6*	38
MXH 2004/A	G 2	G 1 1/2	574	180,5	290	205	175	180	140	15	54	54	112	6*	39
MXH 2005	G 2	G 1 1/2	630,5	215	310	280	250	258	190	15	68	68	84	38	50,5
MXH 3201/B	G 2 1/2	G 2	503,5	123	280	205	175	170	130	15	54	10	95	6*	29,4
MXH 3202/B	G 2 1/2	G 2	517,5	123	290	205	175	180	140	15	54	10	112	6*	38,5
MXH 3203/A	G 2 1/2	G 2	584,5	169	310	280	250	258	190	15	68	12	84	38	50
MXH 3204/A	G 2 1/2	G 2	630,5	215	310	280	250	258	190	15	68	12	84	38	57,5
MXH 4801/A	G 3	G 2 1/2	547,5	138,5	290	205	175	180	140	15	54	10	128,5	6*	38
MXH 4802/A	G 3	G 2 1/2	568,5	138,5	310	280	250	258	190	15	68	12	100	38	49,5
MXH 4803/A	G 3	G 2 1/2	630,5	200	310	280	250	258	190	15	68	12	100	38	58

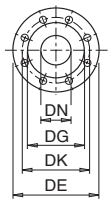

Flanges* EN 1092-2

DN	DE	DK	DG	Holes N.	Holes Ø
40	150	110	81	4	19
50	165	125	99	4	19
65	185	145	118	4	19
80	200	160	132	8	19

* ASME 150 lb (ex ANSI 150 lb)

Victaulic ports MXH-V

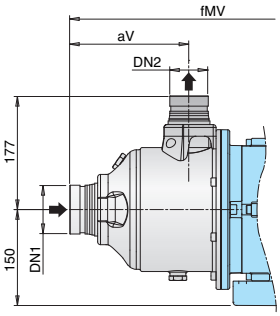

TYPE	DN1 mm	DN2 mm	mm fMV	aV
MXH-V 3201/B	76,1 (DN65)	60,3 (DN50)	541	160
MXH-V 3202/B	76,1 (DN65)	60,3 (DN50)	555	160
MXH-V 3203/A	76,1 (DN65)	60,3 (DN50)	622	206
MXH-V 3204/A	76,1 (DN65)	60,3 (DN50)	668	252
MXH-V 4801/A	88,9 (DN80)	76,1 (DN65)	585	175
MXH-V 4802/A	88,9 (DN80)	76,1 (DN65)	606	175
MXH-V 4803/A	88,9 (DN80)	76,1 (DN65)	668	237

Flanged ports MXH-F

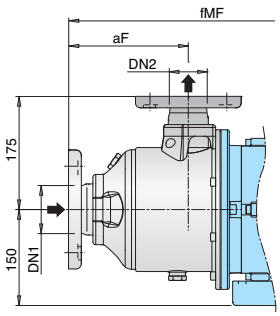

TYPE	DN1 mm	DN2 mm	mm fMF	aF
MXH-F 2001/A	50	40	502	161,5
MXH-F 2002/A	50	40	542	161,5
MXH-F 2003	50	40	575	180,5
MXH-F 2004/A	50	40	624	215
MXH-F 2005	50	40	665	249,5
MXH-F 3201/B	65	50	531	151
MXH-F 3202/B	65	50	545	151
MXH-F 3203/A	65	50	612	197
MXH-F 3204/A	65	50	658	243
MXH-F 4801/A	80	65	565	156
MXH-F 4802/A	80	65	586	156
MXH-F 4803/A	80	65	648	218

CALPEDA ROMANIA - INFINITY PUMPS SRL
Tel: 0268.33.47.47 / 0722.244.944
vanzari@calpeda.ro | www.calpeda.ro

MXH 20,32,48

Horizontal Multi-Stage Close Coupled Pumps

Dimensions and weights

Threaded ports
MXH EI

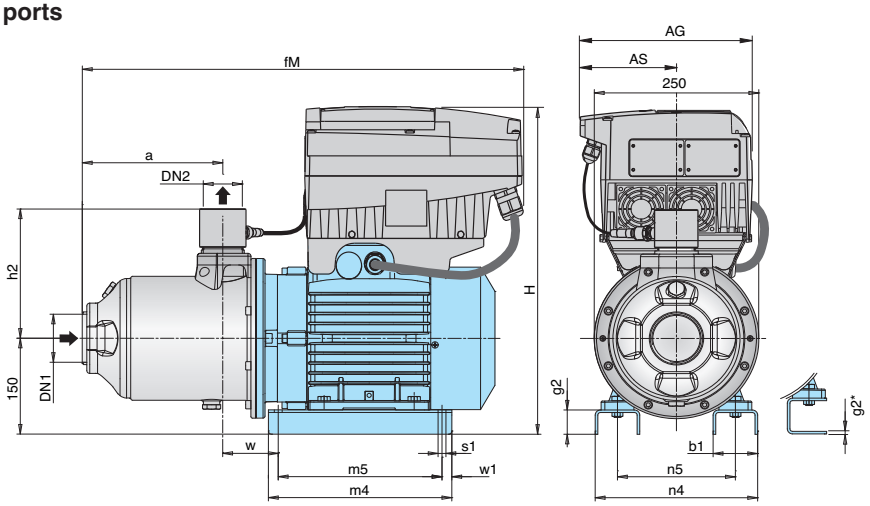

TYPE	DN1 ISO 228	DN2 ISO 228	mm															kg
			fM	AG	AS	a	H	h2	m4	m5	n4	n5	w1	b1	s1	w	g2	
MXH EI 2001/A	G 2	G 1 1/2	499	190	105	127	436	192	205	175	170	130	15	54	10	95	6*	32,4
MXH EI 2002/A	G 2	G 1 1/2	532	210	118	127	436	192	205	175	170	130	15	54	10	95	6*	36,4
MXH EI 2003	G 2	G 1 1/2	572	210	118	146	444	192	205	175	180	140	15	54	10	112	6*	45,5
MXH EI 2004/A	G 2	G 1 1/2	606	210	118	180,5	444	192	205	175	180	140	15	54	54	112	6*	46,5
MXH EI 2005	G 2	G 1 1/2	630,5	210	118	215	472	192	280	250	258	190	15	68	68	84	38	65,3
MXH EI 3201/B	G 2 1/2	G 2	528,5	210	118	123	436	197	205	175	170	130	15	54	10	95	6*	35,8
MXH EI 3202/B	G 2 1/2	G 2	594,5	210	118	123	444	197	205	175	180	140	15	54	10	112	6*	46,0
MXH EI 3203/A	G 2 1/2	G 2	594,5	210	118	169	472	197	280	250	258	190	15	68	12	84	38	64,8
MXH EI 3204/A	G 2 1/2	G 2	665,5	281	153	215	518	197	280	250	258	190	15	68	12	84	38	72,3
MXH EI 4801/A	G 3	G 2 1/2	579,5	210	118	138,5	444	202	205	175	180	140	15	54	10	128,5	6*	45,5
MXH EI 4802/A	G 3	G 2 1/2	568,5	210	118	138,5	472	202	280	250	258	190	15	68	12	100	38	64,3
MXH EI 4803/A	G 3	G 2 1/2	665,5	281	153	200	518	202	280	250	258	190	15	68	12	100	38	72,8

Flanged ports
MXH-F EI

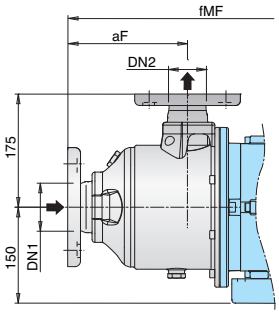

TYPE	DN1 mm	DN2 mm	mm fMF	aF
MXH-F EI 2001/A	50	40	534	161,5
MXH-F EI 2002/A	50	40	567	161,5
MXH-F EI 2003	50	40	607	180,5
MXH-F EI 2004/A	50	40	641	215
MXH-F EI 2005	50	40	665	249,5
MXH-F EI 3201/B	65	50	556	151
MXH-F EI 3202/B	65	50	622	151
MXH-F EI 3203/A	65	50	622	197
MXH-F EI 3204/A	65	50	693	243
MXH-F EI 4801/A	80	65	597	156
MXH-F EI 4802/A	80	65	586	156
MXH-F EI 4803/A	80	65	683	218

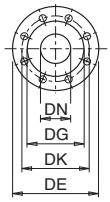

Flanges* EN 1092-2

DN	DE	DK	DG	Holes N.	Holes Ø
40	150	110	81	4	19
50	165	125	99	4	19
65	185	145	118	4	19
80	200	160	132	8	19

* ASME 150 lb (ex ANSI 150 lb)

CALPEDA ROMANIA - INFINITY PUMPS SRL
Tel: 0268.33.47.47 / 0722.244.944
vanzari@calpeda.ro | www.calpeda.ro

MXH 20,32,48

Horizontal Multi-Stage Close Coupled Pumps

Characteristic curves n ≈ 2900 rpm

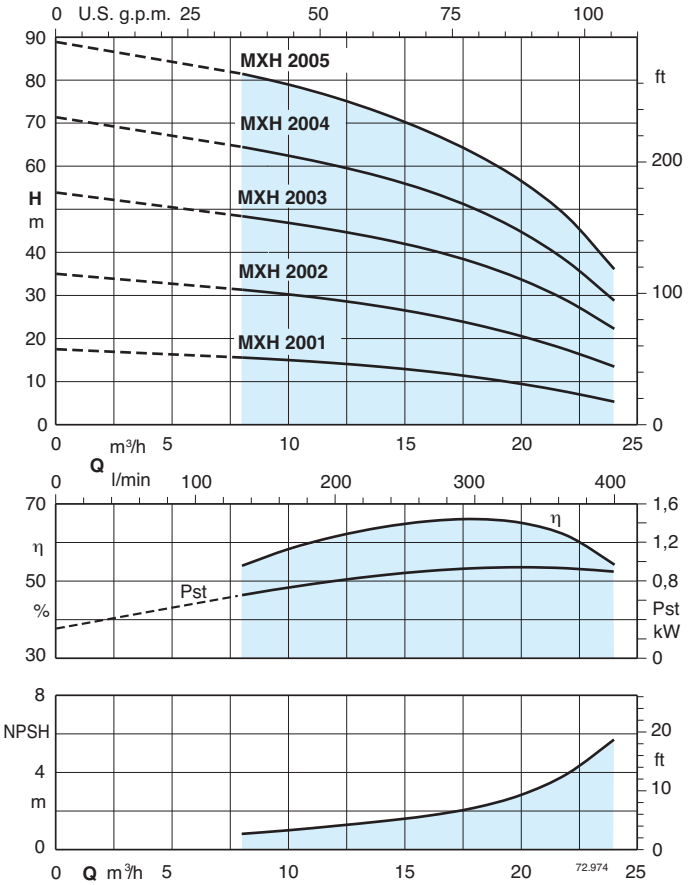

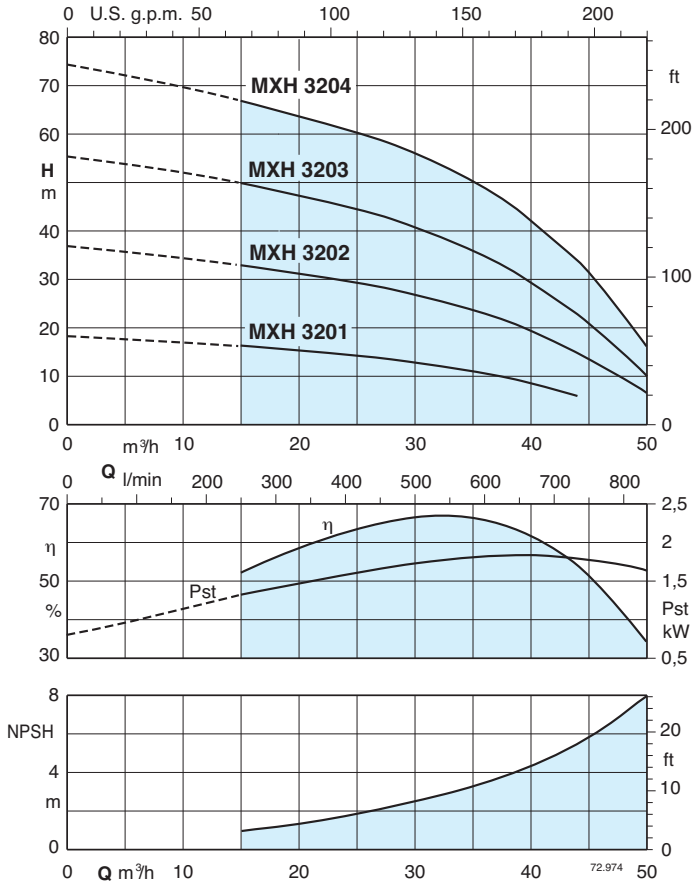

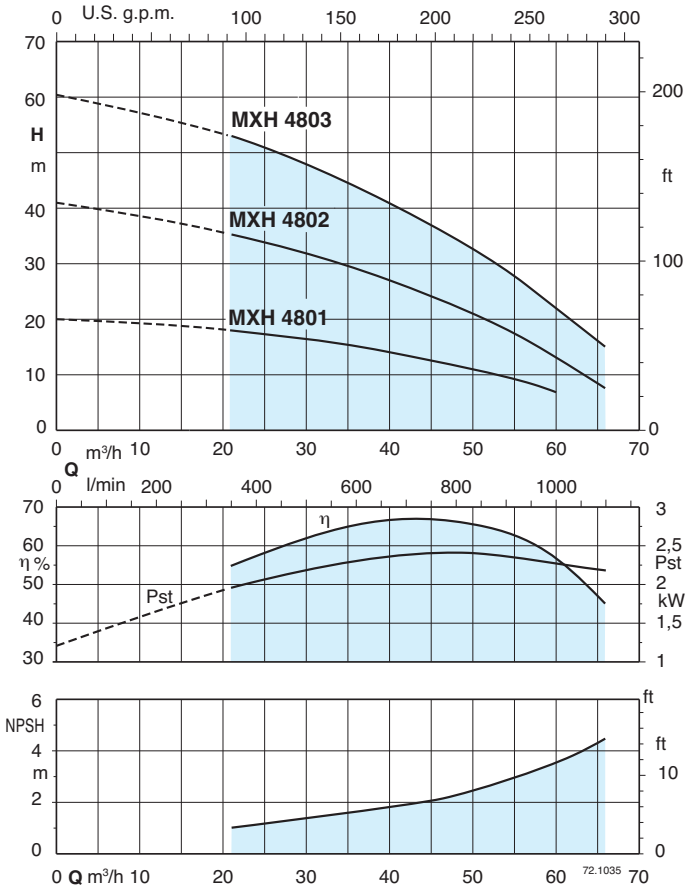

Designation

MXH-F EI 3204 *

- Series
- No code = threaded ports
- Victaulic ports — V
- Flanged ports — F
- With frequency converter I-MAT
- Rated capacity in m³/h
- Number of stages

Construction variants
special seal code (no code = standard seal)

CALPEDA ROMANIA - INFINITY PUMPS SRL
Tel: 0268.33.47.47 / 0722.244.944
vanzari@calpeda.ro | www.calpeda.ro

MXH 20,32,48

Horizontal Multi-Stage Close Coupled Pumps

Features

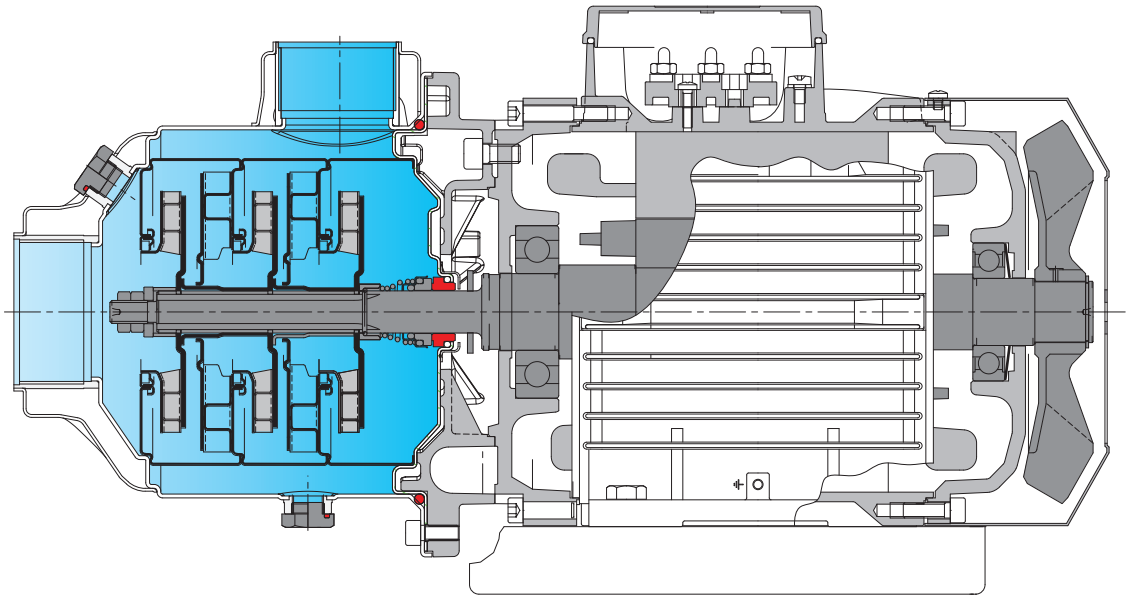

Flexibility
Three versions of ports: threaded, flanged and Victaulic.

Extra safety
With front axis suction port for optimum suction conditions.

Reliable
All hydraulic parts in contact with the pumped liquid are made in stainless steel.
For liquids from -15 °C to 110 °C.

Robust
Single-piece, thick barrel casing, open on one side only, with reinforced threaded ports.

Compact
The bracket between pump and motor is extremely compact.

Greater protection
Against leakage, with the pump casing cover separated from the motor shield.
Possibility of inspecting the seal through the side apertures between the two walls.

CALPEDA ROMANIA - INFINITY PUMPS SRL
Tel: 0268.33.47.47 / 0722.244.944
vanzari@calpeda.ro | www.calpeda.ro

MXP

Horizontal Multi-Stage Close Coupled Pumps

Construction

Horizontal multi-stage close coupled pump.
Single-piece barrel casing in chrome-nickel stainless steel, with front suction port above pumps axis and radial delivery at top.
Stages in Noryl.

Applications

For water supply.
For domestic use, for garden use and irrigation.

Operating conditions

Liquid temperature: 0 °C to +50 °C.
Ambient temperature up to +40 °C.
Maximum permissible pressure in the pump casing: 8 bar.
Continuous duty.

Motor

2-pole induction motor, 50 Hz (n ≈ 2800 rpm).
MXP: three-phase 230/400 V ± 10%.
MXPM: single-phase 230 V ± 10%, with thermal protector. Capacitor inside the terminal box.
Insulation class F.
Protection IP 54.
Motor suitable for operation with frequency converter from 1,1 kW.
Classification scheme IE3 for three-phase motors from 0,75 kW.
Constructed in accordance with: EN 60034-1; EN 60034-30-1. EN 60335-1, EN 60335-2-41.

Materials

Component	Material
Pump casing	Cr-Ni steel 1.4301 EN 10088 (AISI 304)
Casing cover	Cr-Ni steel 1.4301 EN 10088 (AISI 304)
Pump Shaft	Chrome steel 1.4104 EN 10088 (AISI 430)
Plug	Cr-Ni steel 1.4305 EN 10088 (AISI 303)
Stage casing	PPO-GF20 (Noryl)
Impeller	PPO-GF20 (Noryl)
Mechanical seal	Carbon - Ceramic - NBR

Special features on request

- Other voltages.
- Frequency 60 Hz (as per 60 Hz data sheet).
- Motor suitable for operation with frequency converter up to 0,75 kW.

Characteristic curves n ≈ 2800 rpm

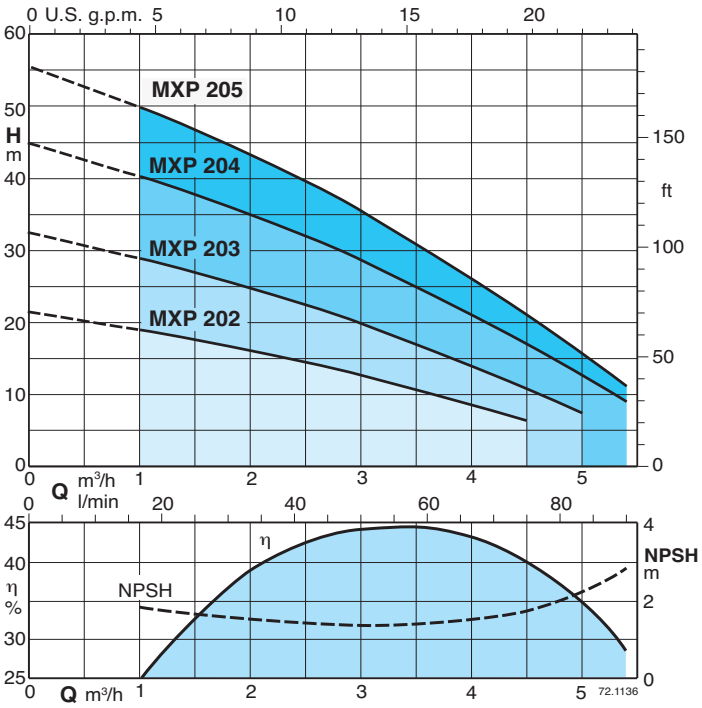

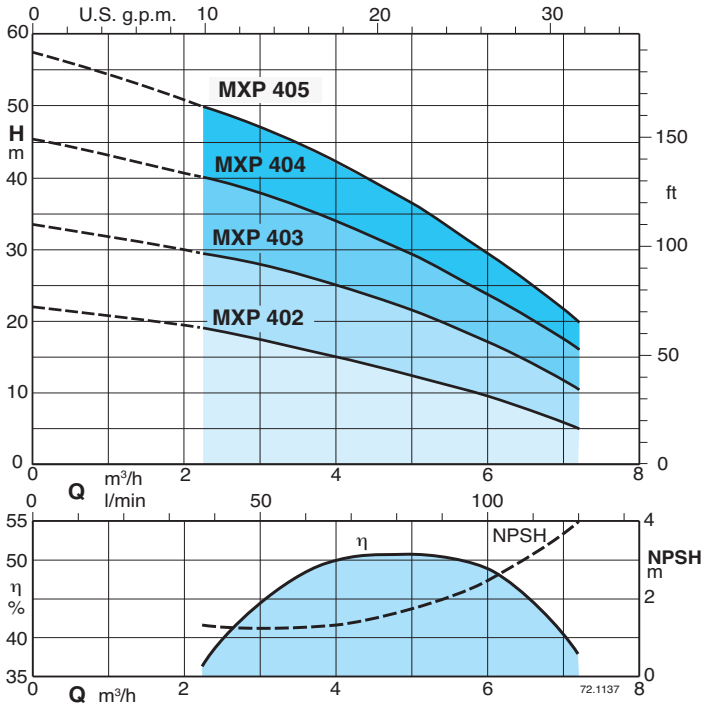

CALPEDA ROMANIA - INFINITY PUMPS SRL
Tel: 0268.33.47.47 / 0722.244.944
vanzari@calpeda.ro | www.calpeda.ro

MXP

Horizontal Multi-Stage Close Coupled Pumps

Performance n ≈ 2800 rpm

3 ~	230 V	400 V	1 ~	230 V	P1	P2		Q m³/h	0	1	1,5	2	2,5	3	3,5	4	4,5	5	5,4
	A	A		A	kW	kW	HP	l/min	0	16,6	25	33,3	41,6	50	58,3	66,6	75	83,3	90
MXP 202	1,7	1	**MXPM 202**	2,3	0,45	0,33	0,45		21,5	19	17,5	16	14,5	12,5	10,5	8,5	6,5		
MXP 203	2,4	1,4	**MXPM 203**	3	0,63	0,45	0,6	**H** m	32,5	29	27	25	22,5	20	17	14	11	7,5	
MXP 204/A	2,8	1,6	**MXPM 204/A**	4,2	0,8	0,55	0,75		45	40	37,5	35	32	28,5	25	21,5	17	13	9
MXP 205/A	3,5	2	**MXPM 205**	5,4	1,2	0,75	1		56	50	46,5	43,5	40	35,5	31	26,5	21	16	11

3 ~	230 V	400 V	1 ~	230 V	P1	P2		Q m³/h	0	2,25	3	3,5	4	4,5	5	6	7,2
	A	A		A	kW	kW	HP	l/min	0	37,5	50	58,3	66,6	75	83,3	100	120
MXP 402	2,4	1,4	**MXPM 402**	3	0,61	0,45	0,6		22	19	17,5	16,5	15	14	12,5	9,5	5
MXP 403/A	2,8	1,6	**MXPM 403/A**	4,2	0,9	0,55	0,75	**H** m	33,5	30	28	26,5	25	23	21,5	17	10
MXP 404/B	3,5	2	**MXPM 404/A**	5,4	1,2	0,75	1		46	40	38	36,5	34	32	29,5	24	16
MXP 405	4,5	2,6	**MXPM 405**	7	1,5	1,1	1,5		56	50	47	45	42	39,5	36	29,5	20

P1 Max. power input.
P2 Rated motor power output.

Test results with clean cold water, without gas content.
+ 0,5 m security margin on NPSH-value is necessary.

Tolerances according to UNI EN ISO 9906:2012
For capacities over 4 m³/h use a suction pipe G 1 1/4 (DN 32).

Dimensions and weights

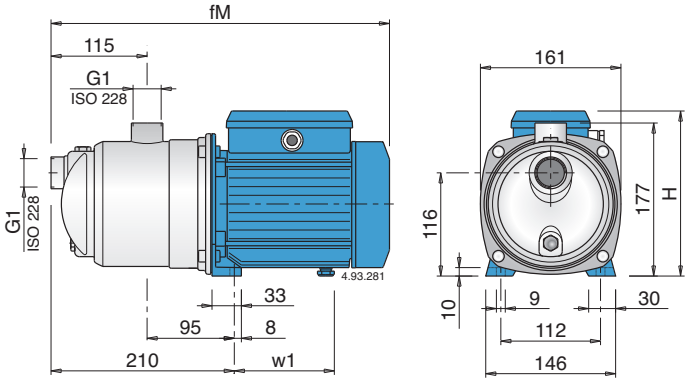

TYPE	mm			kg	
	fM	H	w1	MXP	MXPM
MXP 202 - MXPM 202	362	176	102	5,9	6
MXP 203 - MXPM 203	362	176	102	6,6	6,7
MXP 204/A - MXPM 204/A	391	192	112	8,7	9,6
MXP 205/A - MXPM 205	391	192	112	10,3	10,5
MXP 402 - MXPM 402	362	176	102	6,5	6,6
MXP 403/A - MXPM 403/A	391	192	112	8,6	9,5
MXP 404/B - MXPM 404/A	391	192	112	10,3	10,5
MXP 405 - MXPM 405	421	192	142	13,2	13,5

Features

Extra safety
against running dry, with the suction port above pump axis.

Robust
Single-piece barrel casing.

Compact
Single-piece lantern bracket and base.

Low noise
with the water-filled shroud around the stages.

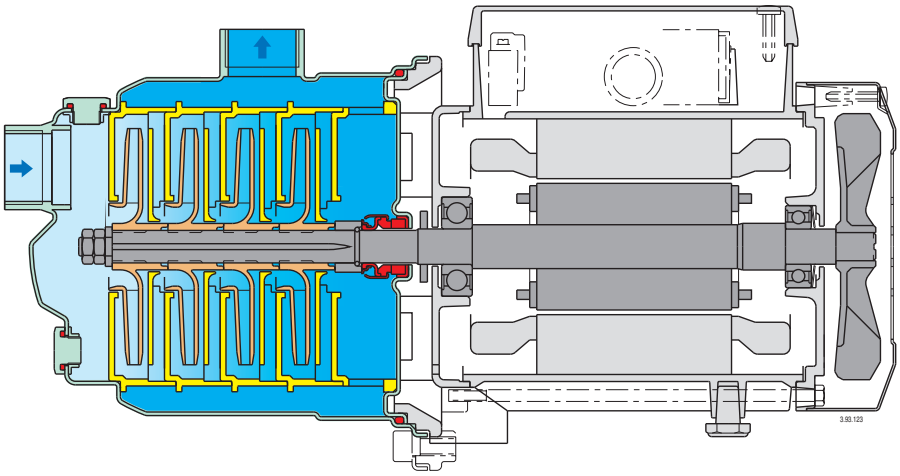

CALPEDA ROMANIA - INFINITY PUMPS SRL
Tel: 0268.33.47.47 / 0722.244.944
vanzari@calpeda.ro | www.calpeda.ro

MGP

Horizontal Multi-Stage Close Coupled Pumps

Construction

Horizontal multi-stage close coupled pump.
Single-piece barrel casing in cast iron, with front suction port above pumps axis and radial delivery at top.
Stages in Noryl.

Applications

For water supply.
For domestic use, for garden use and irrigation.

Operating conditions

Liquid temperature: 0 °C to +50 °C.
Ambient temperature up to +40 °C.
Maximum permissible pressure in the pump casing: 8 bar.
Continuous duty.

Motor

2-pole induction motor, 50 Hz (n ≈ 2800 rpm).
MGP: three-phase 230/400 V ± 10%.
MGPM: single-phase 230 V ± 10%, with thermal protector. Capacitor inside the terminal box.
Insulation class F.
Protection IP 54.
Motor suitable for operation with frequency converter from 1,1 kW.
Classification scheme IE3 for three-phase motors from 0,75 kW.
Constructed in accordance with: EN 60034-1; EN 60034-30-1. EN 60335-1, EN 60335-2-41.

Materials

Component	Material
Pump casing	Cast iron GJL 200 EN 1561
Casing cover	Cr-Ni steel 1.4301 EN 10088 (AISI 304)
Pump Shaft	Chrome steel 1.4104 EN 10088 (AISI 430)
Stage casing	PPO-GF20 (Noryl)
Impeller	PPO-GF20 (Noryl)
Mechanical seal	Carbon - Ceramic - NBR

Special features on request

- Other voltages.
- Frequency 60 Hz (as per 60 Hz data sheet).
- Motor suitable for operation with frequency converter up to 0,75 kW.

Characteristic curves n ≈ 2800 rpm

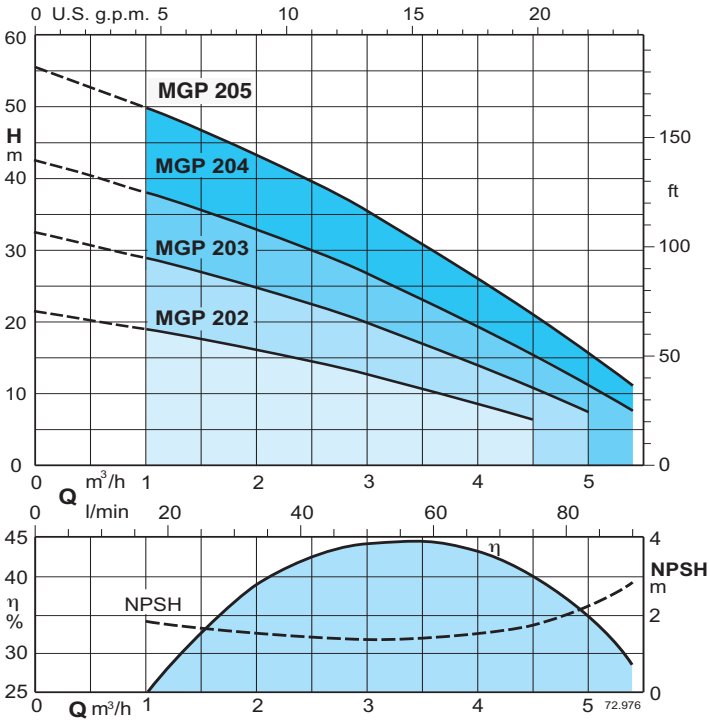

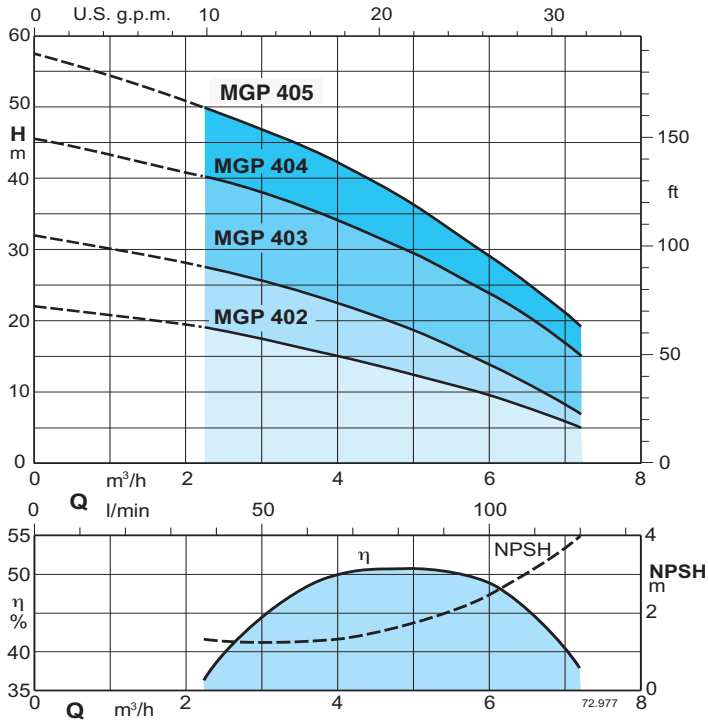

CALPEDA ROMANIA - INFINITY PUMPS SRL
Tel: 0268.33.47.47 / 0722.244.944
vanzari@calpeda.ro | www.calpeda.ro

MGP

Horizontal Multi-Stage Close Coupled Pumps

Performance n ≈ 2800 rpm

3 ~	230 V	400 V	1 ~	230 V	P_1	P_2		Q m³/h	0	1	1,5	2	2,5	3	3,5	4	4,5	5	5,4
	A	A		A	kW	kW	HP	l/min	0	16,6	25	33,3	41,6	50	58,3	66,6	75	83,3	90
MGP 202	1,7	1	**MGPM 202**	2,3	0,45	0,33	0,45		21,5	19	17,5	16	14,5	12,5	10,5	8,5	6,5		
MGP 203	2,4	1,4	**MGPM 203**	3	0,63	0,45	0,6		32,5	29	27	25	22,5	20	17	14	11	7,5	
MGP 204	2,8	1,6	**MGPM 204**	3,3	0,75	0,55	0,75	**H** m	43	38	35,5	32,7	29,7	26,5	23	19,2	15,2	11	7,5
MGP 205/A	3,5	2	**MGPM 205**	5,4	1	0,75	1		56	50	46,5	43,5	40	35,5	31	26,5	21	16	11

3 ~	230 V	400 V	1 ~	230 V	P_1	P_2		Q m³/h	0	2,25	3	3,5	4	4,5	5	6	7,2
	A	A		A	kW	kW	HP	l/min	0	37,5	50	58,3	66,6	75	83,3	100	120
MGP 402	2,4	1,4	**MGPM 402**	3	0,61	0,45	0,6		22	19	17,5	16,5	15	14	12,5	9,5	5
MGP 403	3	1,73	**MGPM 403**	3,5	0,85	0,55	0,75		32	27,5	25,5	23,7	22	20	18	13,3	7
MGP 404/A	3,5	2	**MGPM 404**	5,4	1,2	0,75	1	**H** m	46	40	38	36,5	34	32	29,5	24	15
MGP 405	4,5	2,6	**MGPM 405**	7	1,5	1,1	1,5		56	50	47	45	42,5	39,5	36	29	19

P_1 Max. power input.
P_2 Rated motor power output.

Test results with clean cold water, without gas content.
+ 0,5 m security margin on NPSH-value is necessary.

Tolerances according to UNI EN ISO 9906:2012
For capacities over 4 m³/h use a suction pipe G 1 1/4 (DN 32).

Dimensions and weights

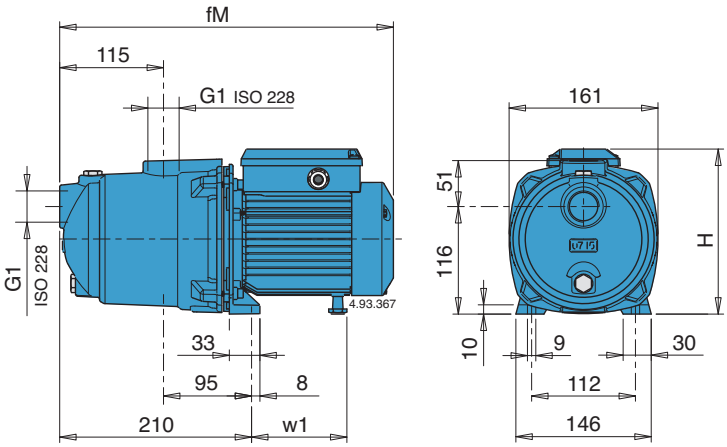

TYPE	mm			Net weight kg	
	fM	H	w1	MGP	MGPM
MGP 202 - MGPM 202	362	176	102	8,9	9
MGP 203 - MGPM 203	362	176	102	9,3	9,4
MGP 204 - MGPM 204	362	176	102	10,3	10,4
MGP 205/A - MGPM 205	391	192	112	13,3	13,5
MGP 402 - MGPM 402	362	176	102	9,5	9,6
MGP 403 - MGPM 403	362	176	102	10,3	10,4
MGP 404/A - MGPM 404	391	192	112	13,3	13,5
MGP 405 - MGPM 405	421	192	112	16,2	16,5

Features

Extra safety
against running dry, with the suction port above pump axis.

Robust
Single-piece barrel casing.

Compact
Single-piece lantern bracket and base.

Low noise
with the water-filled shroud around the stages.

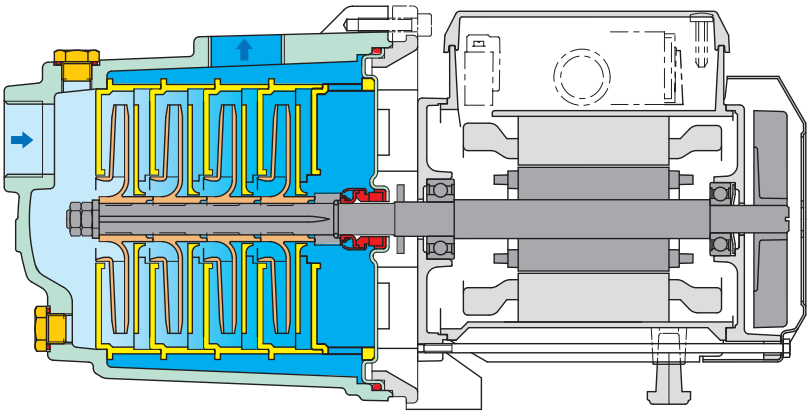

CALPEDA ROMANIA - INFINITY PUMPS SRL
Tel: 0268.33.47.47 / 0722.244.944
vanzari@calpeda.ro | www.calpeda.ro

MPSU

Vertical multi-stage close coupled pumps

PATENTED

Construction

5" Vertical multi-stage close coupled **submersible or surface pumps.**
External jacket in stainless steel AISI 304 and stages Noryl.
MPSUM with built-in capacitor, accessible through the delivery casing.
Suction connection on the lower casing and delivery connection on the top casing.
Motor cooled by the pumped water passing between the motor jacket and the external jacket.
Double mechanical shaft seal with interposed oil chamber.

Applications

For clean water without abrasives or additives aggressive for the materials of the pump.
For domestic, civil and industrial applications.
For installation in confined space with minimum ventilation.
For installation in locations subject to risk of temporary flooding, the pump can be fully immersed.
For installation in areas exposed to water jetting.
When low-noise operation is required.

Operating conditions

Water temperature up to 35 °C.
Maximum permissible pressure in the pump casing: 8 bar.
Continuous duty.

Motor

2-pole induction motor, 50 Hz (n ≈ 2900 1/min).
MPSU : three-phase 230 V ± 10%;
three-phase 400 V ± 10%.
Cable: H07RN8-F, length 5 m, without plug.

MPSUM :single-phase 230 V ± 10%, with thermal protector.
Incorporated capacitor.
Float switch MPSUM.. CG (on demand)
Cable: H07RN8-F, length 5 m, with plug CEI-UNEL 47166.

Insulation class F.
Protection IP X8 (for continuous immersion).
Triple impregnation humidity-proof dry winding.
Constructed in accordance with EN 60034-1;
EN 60335-1, EN 60335-2-41.

Materials

Component	Material
Delivery casing External jacket Base Motor jacket	Chrome-nickel steel 1.4301 EN 10088 (AISI 304)
Stage casing Impeller	PPO-GF20 (Noryl)
Shaft	Chrome-nickel steel 1.4301 EN 10088 (AISI 304)
Capacitor cover Oil chamber cover Preload ring stages Support ring preload	PPS Polymer (Grivory)
Upper mechanical seal Lower mechanical seal	Steatite, carbon, NBR Carbon, silicon carbide, NBR
Seal lubrication oil	Oil for food machinery and pharmaceutic use

Special features on request

- Other voltages. - Frequency 60 Hz (as per 60 Hz data sheet).
- Cable length 15 m.
- Motor suitable operation with frequency converter.

Coverage chart n ≈ 2900 rpm

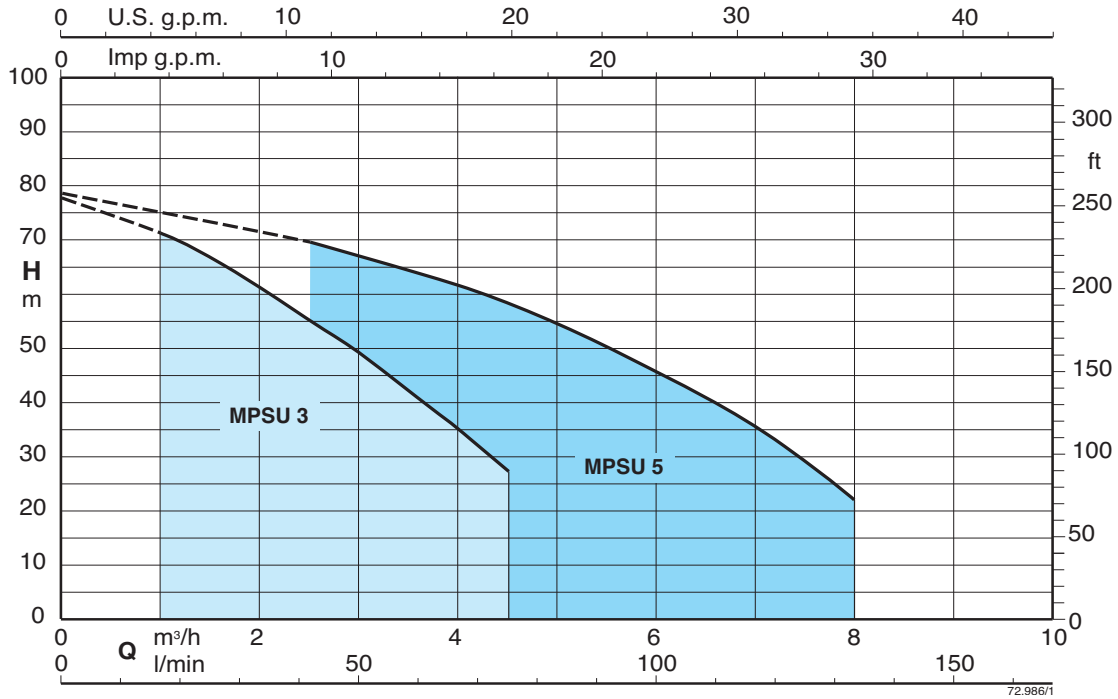

CALPEDA ROMANIA - INFINITY PUMPS SRL
Tel: 0268.33.47.47 / 0722.244.944
vanzari@calpeda.ro | www.calpeda.ro

MPSU

Vertical multi-stage close coupled pumps

Performance n ≈ 2900 rpm

3 ~	230 V	400 V	1 ~	230 V	Capacitor		P_1	P_2		Q m³/h	0	1	1,5	2	2,5	3	3,5	4	4,5
	A	A		A	μF	V	kW	kW	HP	l/min	0	16,6	25	33,3	41,6	50	58,3	66,6	75
MPSU 304	2,8	1,6	**MPSUM 304**	4,1	20	450	0,9	0,55	0,75	**H** m	44	41,5	39,5	36,5	33,5	29,5	25,5	21	16
MPSU 305	3,3	1,9	**MPSUM 305**	5	20	450	1,1	0,75	1		54	49,5	46,2	43	30,9	35	30	25	19
MPSU 306	3,8	2,2	**MPSUM 306**	6	25	450	1,3	0,9	1,2		66,5	60,5	57	53	48,5	43,5	38	32	26
MPSU 307	4,5	2,6	**MPSUM 307**	6,6	25	450	1,5	0,9	1,2		75	67,5	63	58	53	47	41	34,5	27

3 ~	230 V	400 V	1 ~	230 V	Capacitor		P_1	P_2		Q m³/h	0	2,5	3	3,5	4	4,5	5	6	7	8
	A	A		A	μF	V	kW	kW	HP	l/min	0	41,6	50	58,3	66,6	75	83,3	100	116	133
MPSU 504	3,8	2,2	**MPSUM 504**	6	25	450	1,2	0,9	1,2	**H** m	45	39,5	37,8	35,8	33,5	31	28,5	23	16,5	9,5
MPSU 505	4,5	2,6	**MPSUM 505**	7	25	450	1,5	1,1	1,5		53	47,5	45,5	43,5	41	38,5	35,5	29,5	22	13,5
MPSU 506	4,8	2,8	**MPSUM 506**	8,3	30	450	1,7	1,1	1,5		66,5	58	55,6	53	50	46,3	42,5	34	24,5	14
MPSU 507	6,9	4	**MPSUM 507**	12	35	450	2,2	1,5	2		78,5	69,5	66,5	64	61,5	58	54,5	45,5	36	22

P_1 Max. power input. P_2 Rated motor power output. Tolerances according to UNI EN ISO 9906:2012 Test results with clean cold water, without gas content.

Dimensions and weights

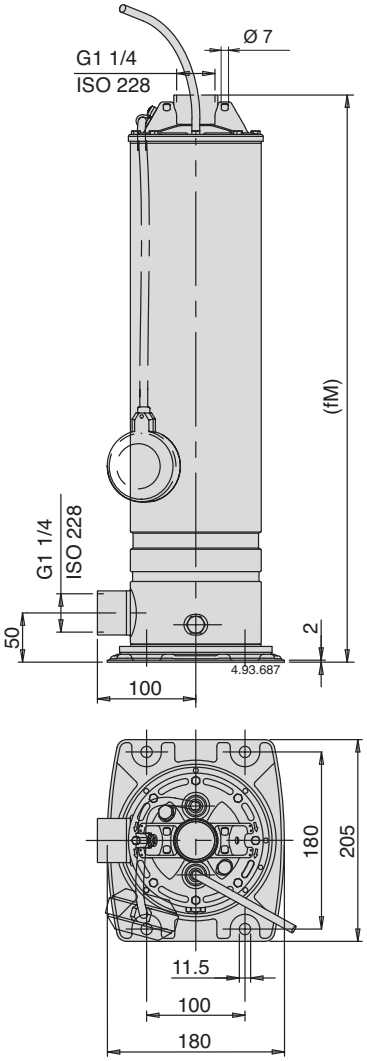

Weights with cable length: 5 m

PUMP	fM mm	kg MPSU	kg MPSUM	Cavo H07RN8-F 230V 1 ~	230V 3 ~	400V 3 ~
MPSU 304 - MPSUM 304	553	11,4	12,4	3G1 mm²	4G1 mm²	4G1 mm²
MPSU 305 - MPSUM 305	602	12,7	13,7	3G1 mm²	4G1 mm²	4G1 mm²
MPSU 306 - MPSUM 306	626	13,3	14,8	3G1 mm²	4G1 mm²	4G1 mm²
MPSU 307 - MPSUM 307	650	13,5	15	3G1 mm²	4G1 mm²	4G1 mm²
MPSU 504 - MPSUM 504	578	13,1	14,1	3G1 mm²	4G1 mm²	4G1 mm²
MPSU 505 - MPSUM 505	602	14	15	3G1 mm²	4G1 mm²	4G1 mm²
MPSU 506 - MPSUM 506	671	15,5	17	3G1,5 mm²	4G1 mm²	4G1 mm²
MPSU 507 - MPSUM 507	720	17	18,5	3G2,5 mm²	4G1 mm²	4G1 mm²

MPSUM ... CG With float switch pump (on demand)

CALPEDA ROMANIA - INFINITY PUMPS SRL
Tel: 0268.33.47.47 / 0722.244.944
vanzari@calpeda.ro | www.calpeda.ro

MPSU

Vertical multi-stage close coupled pumps

Characteristic curves n ≈ 2900 rpm

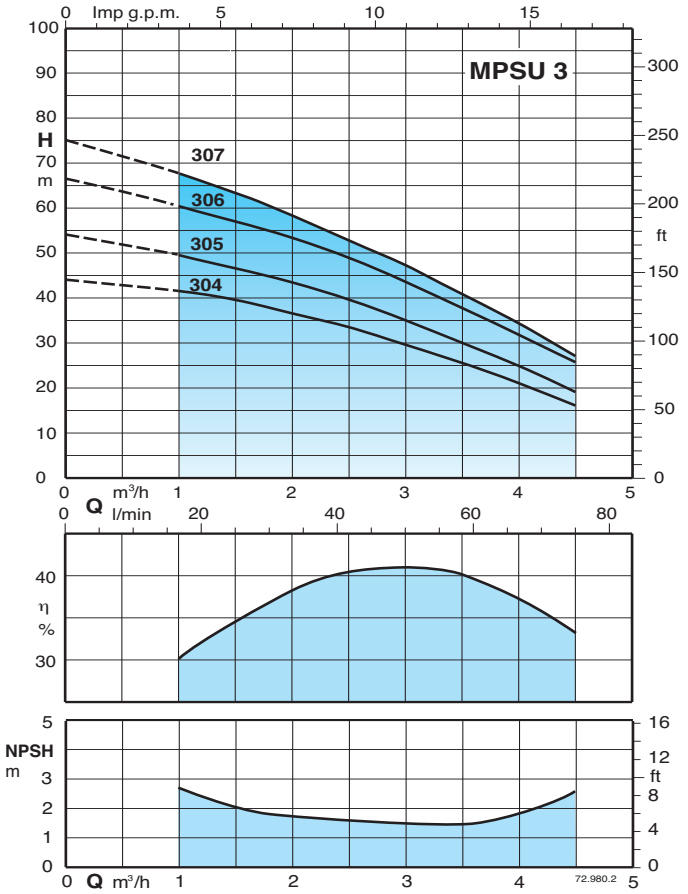

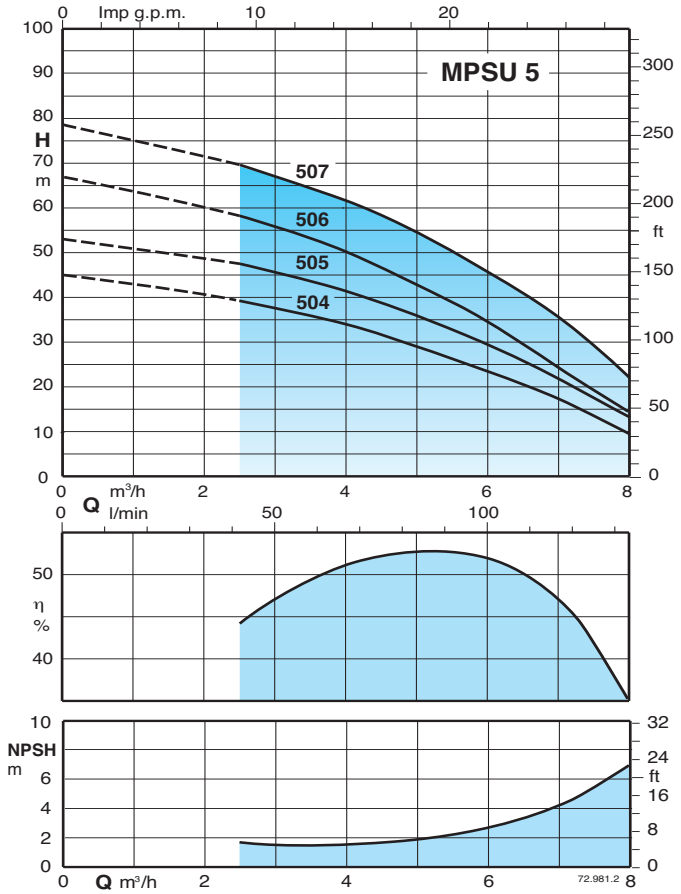

Installation examples

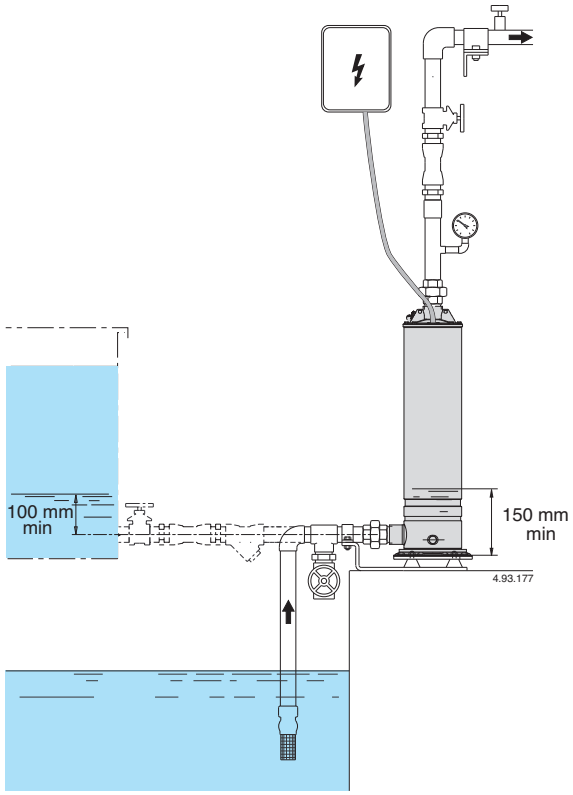

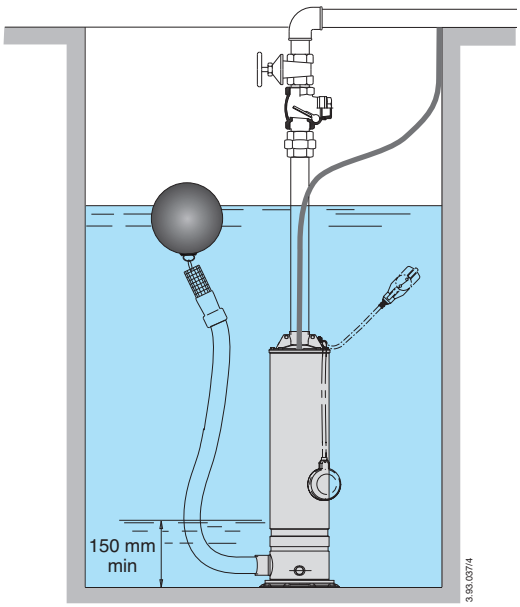

CALPEDA ROMANIA - INFINITY PUMPS SRL
Tel: 0268.33.47.47 / 0722.244.944
vanzari@calpeda.ro | www.calpeda.ro

MPSU

Vertical multi-stage close coupled pumps

Features

PATENTED

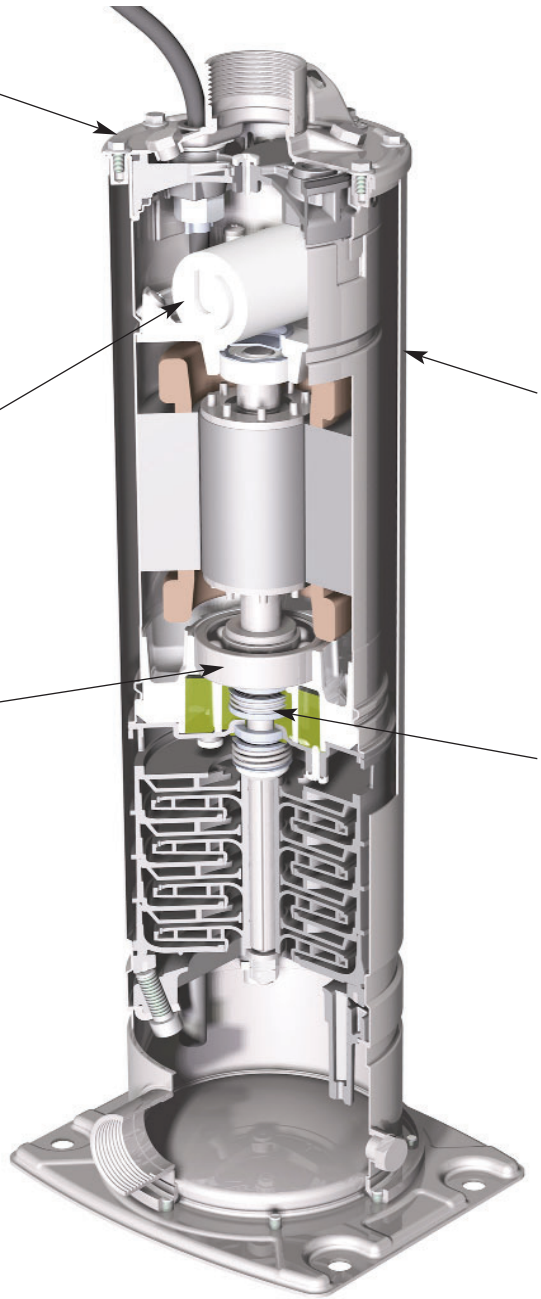

Innovative
Designed to withstand water hammering and the ON-OFF operation of any valve located in the discharge line.
The impacts generated by water hammering or by the closing of the valve are fully supported by the capacitor cover,which relieves the stresses on a specific support made on the stainless steel jacket, without affecting the plastic hydraulic part.

Flexible
Allows the inspection of the capacitor without disassembling the pump, through the delivery casing.

Reliable
The ball bearings and shaft are sized in order to reduce stresses, guaranteeing high reliability in any operating condition.

Low-Noise operation
The design of hydraulic parts, the water-filled shroud around the motor and the submerged operation ensures low noise operation.

Greater Safety
The double shaft sealing with an oil chamber separates the motor from the water and provides further protection against accidental operation when dry.

CALPEDA ROMANIA - INFINITY PUMPS SRL
Tel: 0268.33.47.47 / 0722.244.944
vanzari@calpeda.ro | www.calpeda.ro

MXV-B

Vertical Multi-Stage Close Coupled Pumps

The electropumps MXV-B 25,32,40.. series comply with the European Regulation no. 547/2012 (MXV-B 50 series cannot be sold in the EU).

Coverage chart n ≈ 2900 rpm

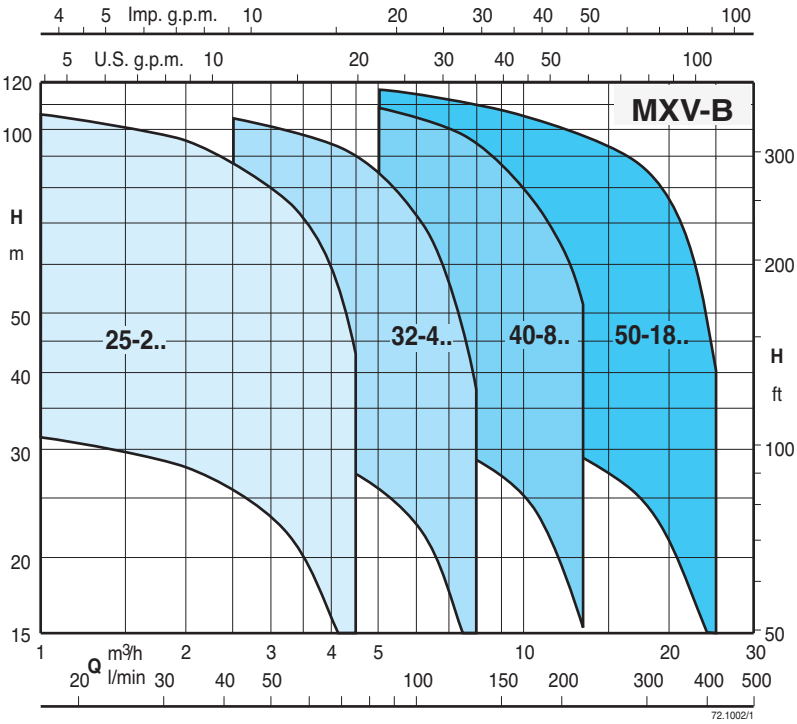

Construction

Vertical multi-stage close coupled pumps with suction and delivery connections of the same diameter and arranged along the same axis (in-line).
All parts that come into contact with the liquid, including wet-end covers, are in chrome-nickel stainless steel with corrosion-resistant bearing sleeves lubricated by the pumped liquid.

Version with frequency converter (on request)

Applications

For water supply systems.
For clean non-explosive liquids, without solid, filamentary or abrasive matter and non-aggressive for stainless steel (with adaptation of sealing materials on request).
A universal pump for civil and industrial use, for pressure-boosting systems, fire-extinguishing systems, high-pressure washing plants, irrigation, agricultural uses and sport installations.

Operating conditions

Temperature of liquid: from -15 °C to +90 °C.
Operating environment temperature: up to 40 °C.
Maximum permissible pressure in pump casing: 16 bar.

Motor

2-pole induction motor, 50 Hz (n ≈ 2900 rpm).
MXV-B: three-phase 230/400 V ± 10% up to 3 kW;
400/690 V ± 10% from 3,7 to 7,5 kW.
MXV-BM: single-phase 230 V ± 10%, with thermal protector.
Capacitor inside the terminal box.
Insulation class F. Protection IP 54.
Motor suitable for operation with frequency converter from 1,1 kW.
Classification scheme IE3 for three-phase motors from 0,75 kW.
Constructed in accordance with: EN 60034-1, EN 60034-30-1.
EN 60335-1, EN 60335-2-41.

Materials (wetted parts)

Component	Material
External jacket Suction casing Delivery casing Stage casing Impeller Lower cover Upper cover Spacer sleeve	Chrome-nickel steel 1.4301 EN 10088 (AISI 304)
Pump shaft Plug	Chrome-nickel steel 1.4305 EN 10088 (AISI 303)
Mechanical seal ISO 3069 - KU	Ceramic alumina/Carbon/EPDM
Wear ring	PTFE
O-ring	NBR

Special features on request

- Other voltages. - Frequency 60 Hz.
- Protection IP 55. - Special mechanical seal
- Pump casing seal rings in FPM.
- Higher or lower liquid or ambient temperatures.
- Flanges to screw, in chrome-nickel steel.
- Motor suitable for operation with frequency converter up to 0,75 kW.

Designation

MXV-B M EI 25 - 2 0 5

Series
Single-phase motor (up to 2.2 kW)
With frequency converter I-MAT
DN ports in mm
Rated capacity in m³/h
Number of stages

CALPEDA ROMANIA - INFINITY PUMPS SRL
Tel: 0268.33.47.47 / 0722.244.944
vanzari@calpeda.ro | www.calpeda.ro

MXV-B EI

Vertical Multi-Stage In-Line Pumps

Pumps with frequency converter

The **MXV-B EI** pumps are available with power from 0,75 kW up to 7,5 kW, the pumps are equipped with **I-MAT** installed on board which allows to realize a variable-speed system extremely compact and efficient, ideal in applications of water supply and in the distribution of hot and cold water.
The pump is equipped with transducers suitable for operation and is already programmed at the factory.

Advantages
- Energy saving
- Compact design
- Easy to use
- Programmable to suit the system requirements
- Reliability

Costruction
The system comprises of:
- Pump
- Induction motor
- I-MAT Frequency converter
- Motor adapter for the motor mounting of the frequency converter
- Connection cable between frequency converter and induction motor
- Transducers

Main features
Rated motor power output from 0,75 kW to 7,5 kW
Control range from 1750 to 2900 rpm (2-pole)
Protection against dry running
Protection against operations with closed connection ports
Protection against system leakages
Protection against overcurrent in the motor
Protection agains overvoltage and undervoltage of the power supply
Protection against current unbalances between phases

Operating modes

Constant pressure mode
with pressure transducer

In this mode, the system maintains the preset pressure when the flow required by the installation changes.

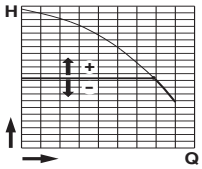

Proportional pressure mode
with pressure transducer

In this mode the system changes the working pressure according to the required flow rate.

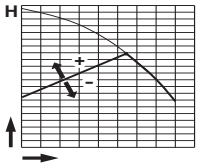

Constant flow mode
with flow meter

In this mode the system maintains a constant flow rate value in a point of the installation according to the required pressure.

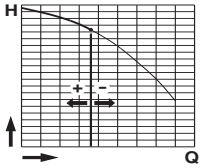

Fixed speed mode
with setting of the speed preferential rotation.

In this mode, by changing the working frequency, you may choose any operational curve included within the working range.

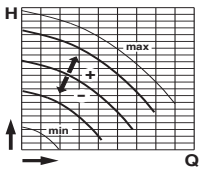

Constant temperature mode
with temperature transducer

In this mode the system keeps the temperature constant inside a system by changing the speed of the pump.

CALPEDA ROMANIA - INFINITY PUMPS SRL
Tel: 0268.33.47.47 / 0722.244.944
vanzari@calpeda.ro | www.calpeda.ro

MXV-B 25-2 Vertical Multi-Stage Close Coupled Pumps

Characteristic curves and performance n ≈ 2900 rpm

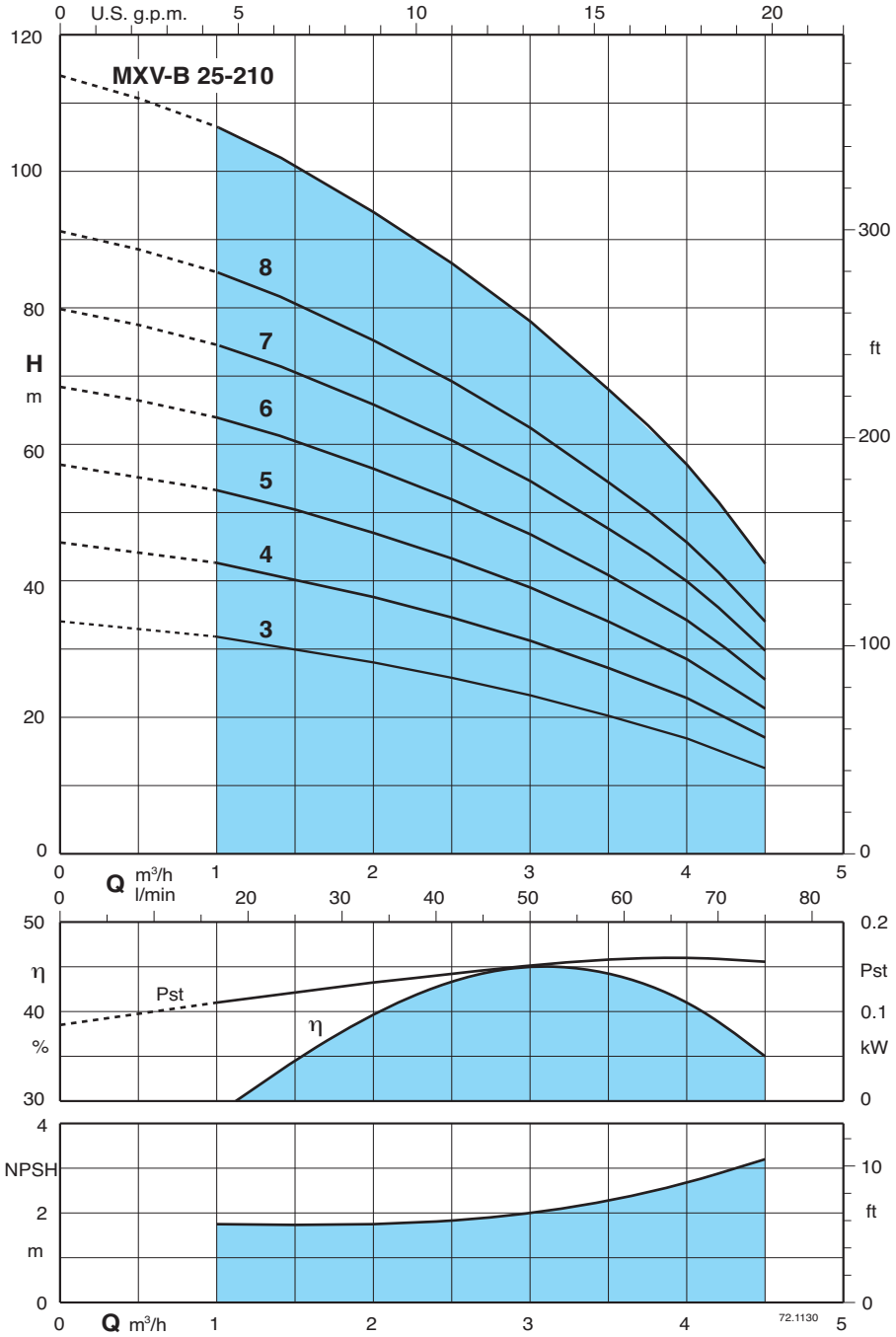

Test results with clean cold water, without gas content.
A safety margin of + 0.5 m is recommended for the NPSH value.
Tolerances in accordance with UNI EN ISO 9906:2012

Head and power values valid for liquids with density ρ = 1,0 kg/dm³ and kinematic viscosity ν = max 20 mm²/sec.

Pst = Power with reference to one stage.
P_1 Max. power input.
P_2 Rated motor power output.

3 ~	230 V	400 V	1 ~	230 V	P_1	P_2		m³/h Q	0	1	1,5	2	2,5	3	3,5	4	4,5
	A	A		A	kW	kW	HP	l/min	0	16,6	25	33,3	41,6	50	58,3	66,6	75
MXV-B 25-203	4	2,3	MXV-BM 25-203	5,8	1,1	0,75	1		34	32	30	28	26	23,5	20,5	17	12,5
MXV-B 25-204	4	2,3	MXV-BM 25-204	5,8	1,1	0,75	1		44	42,5	40	37,5	34,5	31	27	22,5	17
MXV-B 25-205	4	2,3	MXV-BM 25-205	5,8	1,1	0,75	1		56	53	50	47	43	39	34	28	21
MXV-B 25-206/A	4,7	2,7	MXV-BM 25-206	7,4	1,5	1,1	1,5	H	68	63,5	60,5	56	51,5	46,5	40,5	34	25
MXV-B 25-207/A	4,7	2,7	MXV-BM 25-207	7,4	1,6	1,1	1,5	m	79,5	74	70,5	65,5	60	54,5	47,5	39,5	30
MXV-B 25-208/A	7,5	4,3	MXV-BM 25-208	9,2	2	1,5	2		91	85	80,5	75	69	62	54	45,5	34
MXV-B 25-210/A	7,5	4,3	MXV-BM 25-210	9,2	2,3	1,5	2		114	106	101	94	86	78	68	57	42

CALPEDA ROMANIA - INFINITY PUMPS SRL
Tel: 0268.33.47.47 / 0722.244.944
vanzari@calpeda.ro | www.calpeda.ro

MXV-B 32-4 Vertical Multi-Stage Close Coupled Pumps

Characteristic curves and performance n ≈ 2900 rpm

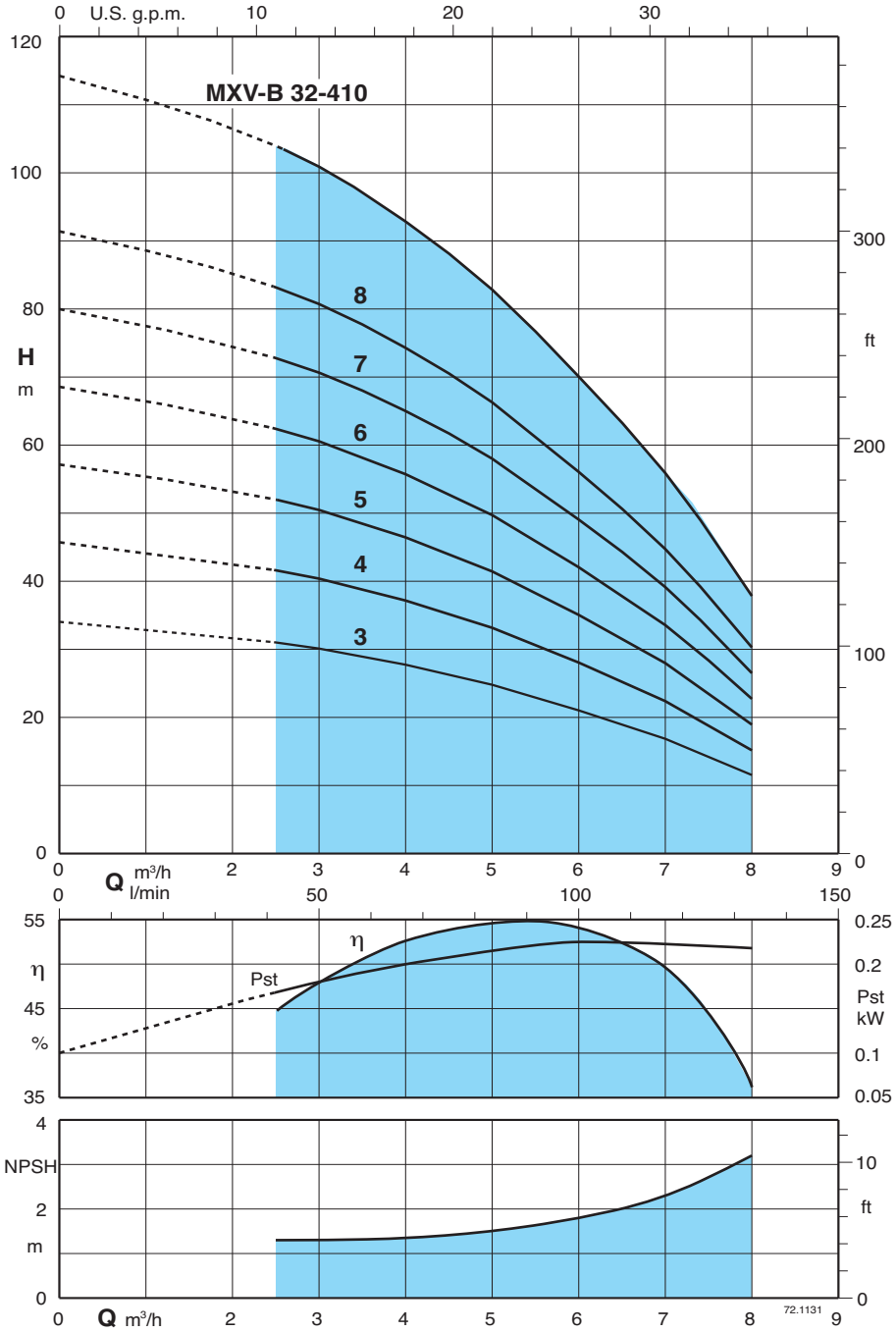

Test results with clean cold water, without gas content.
A safety margin of + 0.5 m is recommended for the NPSH value.
Tolerances in accordance with UNI EN ISO 9906:2012

Head and power values valid for liquids with density ρ = 1,0 kg/dm³ and kinematic viscosity ν = max 20 mm²/sec.

Pst = Power with reference to one stage.
P_1 Max. power input.
P_2 Rated motor power output.

3 ~	230 V	400 V	1 ~	230 V	P_1	P_2		m³/h	0	2,5	3	3,5	4	4,5	5	6	7	8
	A	A		A	kW	kW	HP	Q l/min	0	41,6	50	58,3	66,6	75	83,3	100	116,6	133,3
MXV-B 32-403	4	2,3	MXV-BM 32-403	5,8	1,1	0,75	1	H m	34	31	30,5	29	28	26,5	25	21	17	11,5
MXV-B 32-404/A	4,7	2,7	MXV-BM 32-404	7,4	1,5	1,1	1,5		45	41,5	40	38,5	36,5	34,5	32,5	27,5	22	14,5
MXV-B 32-405/A	4,7	2,7	MXV-BM 32-405	7,4	1,6	1,1	1,5		56	51,5	50	48	46	43,5	41	34,5	27,5	18,5
MXV-B 32-406/A	7,5	4,3	MXV-BM 32-406	9,2	2	1,5	2		68	62	60	58	55,5	52,5	49,5	42	33,5	22,5
MXV-B 32-407/A	7,5	4,3	MXV-BM 32-407	9,2	2,3	1,5	2		79,5	72,5	70,5	68	65	61,5	58	49	39	26,5
MXV-B 32-408/B	9,15	5,3				2,2	3		91	83	80,5	78	74	70	66	56	44,5	30
MXV-B 32-410/B	9,15	5,3				2,2	3		114	104	101	97,5	93	88	83	70	56	38

CALPEDA ROMANIA - INFINITY PUMPS SRL
Tel: 0268.33.47.47 / 0722.244.944
vanzari@calpeda.ro | www.calpeda.ro

MXV-B 40-8 Vertical Multi-Stage Close Coupled Pumps

Characteristic curves and performance n ≈ 2900 rpm

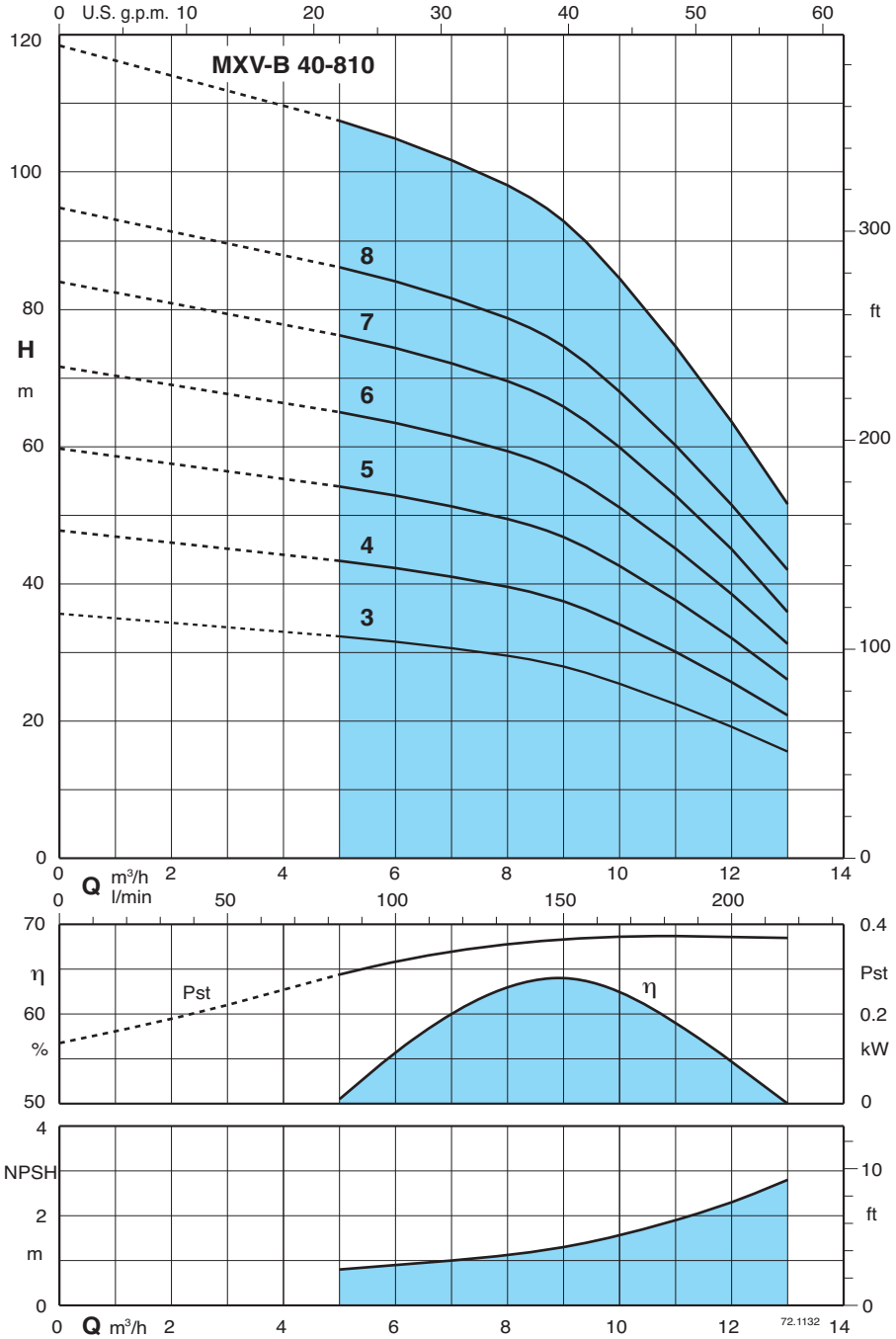

Test results with clean cold water, without gas content.
A safety margin of + 0.5 m is recommended for the NPSH value.
Tolerances in accordance with UNI EN ISO 9906:2012

Head and power values valid for liquids with density ρ = 1,0 kg/dm³ and kinematic viscosity ν = max 20 mm²/sec.

Pst = Power with reference to one stage.
P_1 Max. power input.
P_2 Rated motor power output.

3 ~	230 V	400 V	1 ~	230 V	P_1	P_2		m³/h	0	5	6	7	8	9	10	11	12	13
	A	A		A	kW	kW	HP	Q l/min	0	83,3	100	116,6	133,3	150	166,6	183,3	200	216,6
MXV-B 40-803/A	4,7	2,7	MXV-BM 40-803	7,4	1,6	1,1	1,5	H m	35,5	32,5	31,5	31	29,5	28	25,5	22,5	19,5	15,5
MXV-B 40-804/A	7,5	4,3	MXV-BM 40-804	9,2	2,3	1,5	2		47	43	42	41	40	37	34	30	26	21
MXV-B 40-805/B	9,15	5,3				2,2	3		59	54	53	51	50	47	43	38	32	26
MXV-B 40-806/B	9,15	5,3				2,2	3		71	65	63	62	59	56	51	45	39	31
MXV-B 40-807/A	11,5	6,6				3	4		83	76	74	72	69	66	60	53	45	36
MXV-B 40-808/A	11,5	6,6				3	4		95	87	85	82	79	75	69	60	51	42
MXV-B 40-810/B		9,6				3,7	5		119	109	106	103	99	94	86	75	64	52

CALPEDA ROMANIA - INFINITY PUMPS SRL
Tel: 0268.33.47.47 / 0722.244.944
vanzari@calpeda.ro | www.calpeda.ro

MXV-B 50-18 Vertical Multi-Stage Close Coupled Pumps

Characteristic curves and performance n ≈ 2900 rpm

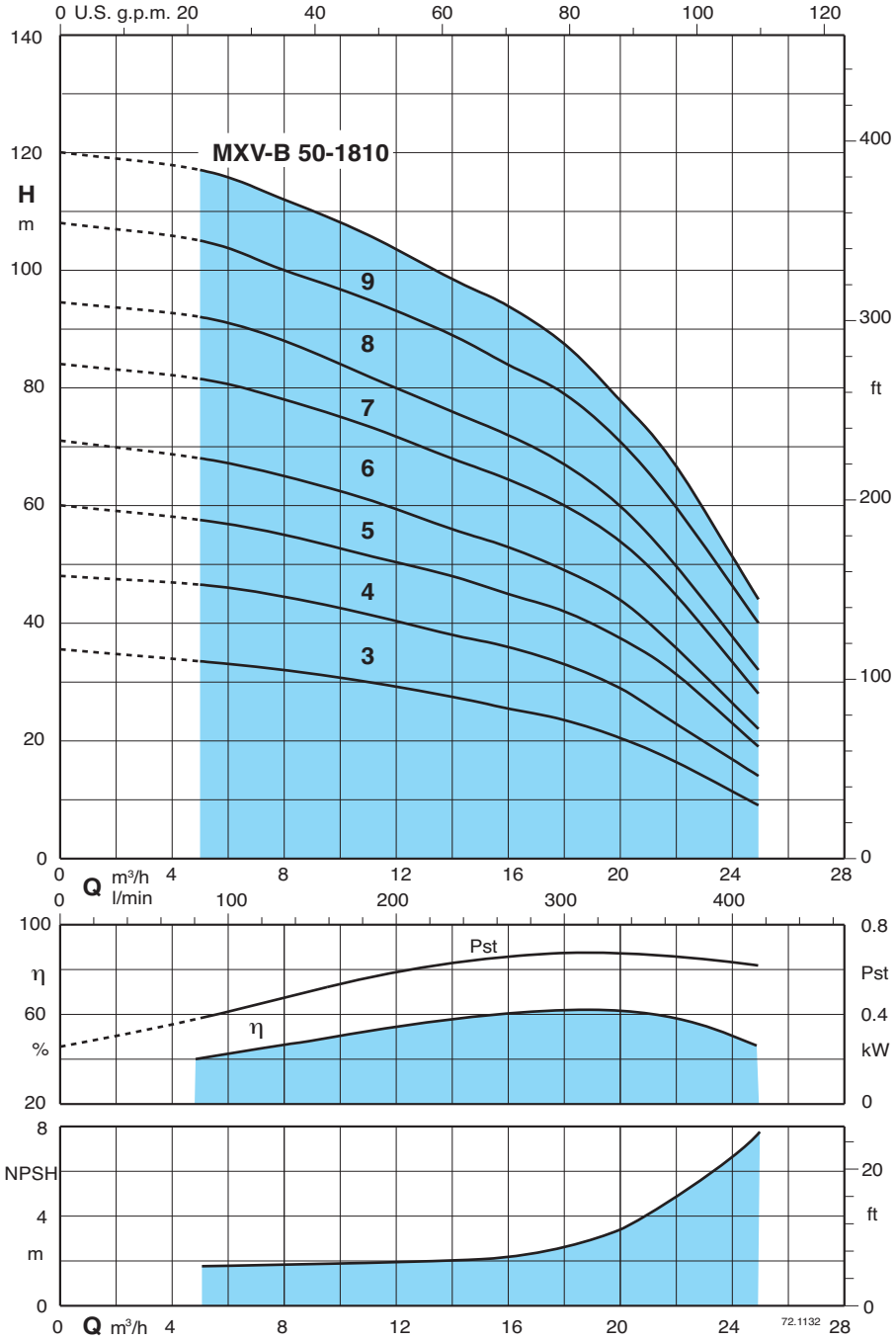

Test results with clean cold water, without gas content.
A safety margin of + 0.5 m is recommended for the NPSH value.
Tolerances in accordance with UNI EN ISO 9906:2012

Head and power values valid for liquids with density ρ = 1,0 kg/dm³ and kinematic viscosity ν = max 20 mm²/sec.

Pst = Power with reference to one stage.
P_1 Max. power input.
P_2 Rated motor power output.

3 ~	230 V	400 V		P_2		m³/h	0	5	8	11	14	16	18	20	22	25
	A	A		kW	HP	Q l/min	0	83,3	133,3	183,3	233	266	300	333	366	416
MXV-B 50-1803/B	9,15	5,3		2,2	3		35,5	33,5	32	30	27,5	25,5	23,5	20,5	16,5	9
MXV-B 50-1804/A	11,5	6,6		3	4		48	46,5	44,5	41,5	38	36	33	29	23	14
MXV-B 50-1805/B		9,6		3,7	5		60	57,5	55	51,5	48	45	42	37,5	31,5	19
MXV-B 50-1806/B		9,6		4	5,5		71	68	65	61	56	53	49	44	36	22
MXV-B 50-1807/A		10,9		5,5	7,5	H m	84	81,5	78	73,5	68	64,5	60	54	45	28
MXV-B 50-1808/A		10,9		5,5	7,5		94,5	92	88	82	76	72	68	60	50	32
MXV-B 50-1809/A		14,3		7,5	10		108	105	100	95	89	84	79	71	60	40
MXV-B 50-1810/A		14,3		7,5	10		120	117	112	106	98	94	88	78	67	44

CALPEDA ROMANIA - INFINITY PUMPS SRL
Tel: 0268.33.47.47 / 0722.244.944
vanzari@calpeda.ro | www.calpeda.ro

MXV-B

Vertical Multi-Stage Close Coupled Pumps

Dimensions and weights

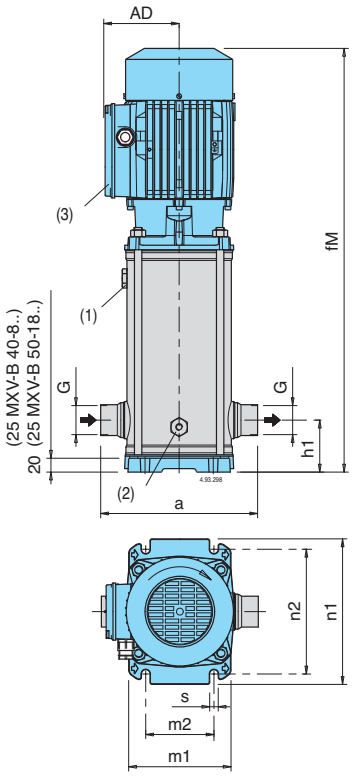

(1) Filling
(2) Draining
(3) Standard position of terminal box
(for other positions rotate motor through 90° or 180°)

Pump	Motor P2 kW	Motor P2 HP	G ISO 228	a	mm h1	fM	AD	n1	n2	m1	m2	s	Net weight MXV-B kg	MXV-BM kg
MXV-B(M) 25-203	0,75	1	G 1	215	75	564	128	210	180	150	100	12,5	23	24
MXV-B(M) 25-204	0,75	1	G 1	215	75	565	128	210	180	150	100	12,5	23,5	24,5
MXV-B(M) 25-205	0,75	1	G 1	215	75	588	128	210	180	150	100	12,5	24,5	25,5
MXV-B(M) 25-206/A	1,1	1,5	G 1	215	75	612	128	210	180	150	100	12,5	26	27
MXV-B(M) 25-207/A	1,1	1,5	G 1	215	75	636	128	210	180	150	100	12,5	27	28
MXV-B(M) 25-208/A	1,5	2	G 1	215	75	660	128	210	180	150	100	12,5	30	31
MXV-B(M) 25-210/A	1,5	2	G 1	215	75	708	128	210	180	150	100	12,5	31	32
MXV-B(M) 32-403	0,75	1	G 1 1/4	215	75	564	128	210	180	150	100	12,5	24	25
MXV-B(M) 32-404/A	1,1	1,5	G 1 1/4	215	75	565	128	210	180	150	100	12,5	25	26
MXV-B(M) 32-405/A	1,1	1,5	G 1 1/4	215	75	588	128	210	180	150	100	12,5	26	27
MXV-B(M) 32-406/A	1,5	2	G 1 1/4	215	75	612	128	210	180	150	100	12,5	28	29
MXV-B(M) 32-407/A	1,5	2	G 1 1/4	215	75	636	128	210	180	150	100	12,5	29	30
MXV-B 32-408/B	2,2	3	G 1 1/4	215	75	700	128	210	180	150	100	12,5	34	-
MXV-B 32-410/B	2,2	3	G 1 1/4	215	75	748	128	210	180	150	100	12,5	35	-
MXV-B(M) 40-803/A	1,1	1,5	G 1 1/2	225	80	593	128	246	215	190	130	14	27	28
MXV-B(M) 40-804/A	1,5	2	G 1 1/2	225	80	593	128	246	215	190	130	14	28	29
MXV-B 40-805/B	2,2	3	G 1 1/2	225	80	663	128	246	215	190	130	14	33	-
MXV-B 40-806/B	2,2	3	G 1 1/2	225	80	693	128	246	215	190	130	14	34	-
MXV-B 40-807/A	3	4	G 1 1/2	225	80	746	138	246	215	190	130	14	45	-
MXV-B 40-808/A	3	4	G 1 1/2	225	80	776	138	246	215	190	130	14	49	-
MXV-B 40-810/B	3,7	5	G 1 1/2	225	80	953	138	246	215	190	130	14	49	-
MXV-B 50-1803/B	2,2	3	G 2	250	90	635	128	246	215	190	130	14	34	-
MXV-B 50-1804/A	3	4	G 2	250	90	701	138	246	215	190	130	14	44	-
MXV-B 50-1805/B	3,7	5	G 2	250	90	738	138	246	215	190	130	14	46,5	-
MXV-B 50-1806/B	4	5,5	G 2	250	90	776	138	246	215	190	130	14	47,5	-
MXV-B 50-1807/A	5,5	7,5	G 2	250	90	841	160	246	215	190	130	14	59	-
MXV-B 50-1808/A	5,5	7,5	G 2	250	90	878	160	246	215	190	130	14	60	-
MXV-B 50-1809/A	7,5	10	G 2	250	90	916	160	246	215	190	130	14	67	-
MXV-B 50-1810/A	7,5	10	G 2	250	90	953	160	246	215	190	130	14	68	-

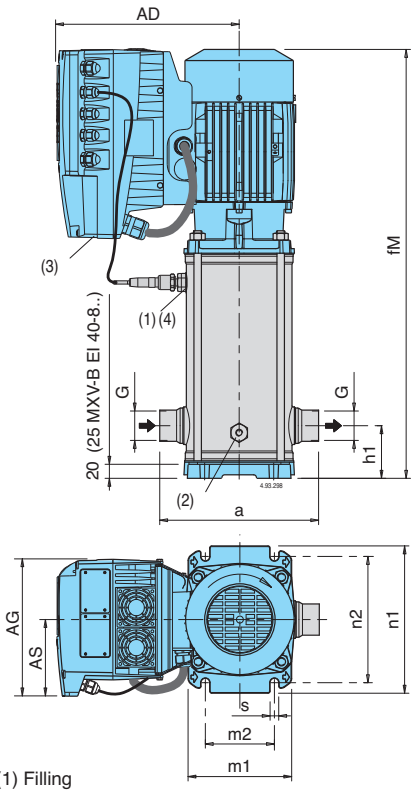

(1) Filling
(2) Draining
(3) Standard position of I-MAT
(for other positions rotate motor through 90° or 180°)
(4) Pressure transducer

Pump	Motor P2 kW	Motor P2 HP	G ISO 228	a	mm h1	fM	AD	AG	AS	n1	n2	m1	m2	s	Net weight kg
MXV-B EI 25-203	0,75	1	G 1	215	75	564	286	190	105	210	180	150	100	12,5	29,4
MXV-B EI 25-204	0,75	1	G 1	215	75	565	286	190	105	210	180	150	100	12,5	29,9
MXV-B EI 25-205	0,75	1	G 1	215	75	588	286	190	105	210	180	150	100	12,5	30,9
MXV-B EI 25-206/A	1,1	1,5	G 1	215	75	612	286	190	105	210	180	150	100	12,5	32,4
MXV-B EI 25-207/A	1,1	1,5	G 1	215	75	636	286	190	105	210	180	150	100	12,5	33,4
MXV-B EI 25-208/A	1,5	2	G 1	215	75	660	286	190	105	210	180	150	100	12,5	36,4
MXV-B EI 25-210/A	1,5	2	G 1	215	75	708	286	190	105	210	180	150	100	12,5	37,4
MXV-B EI 32-403	0,75	1	G 1 1/4	215	75	564	286	190	105	210	180	150	100	12,5	30,4
MXV-B EI 32-404/A	1,1	1,5	G 1 1/4	215	75	565	286	190	105	210	180	150	100	12,5	31,4
MXV-B EI 32-405/A	1,1	1,5	G 1 1/4	215	75	588	286	190	105	210	180	150	100	12,5	32,4
MXV-B EI 32-406/A	1,5	2	G 1 1/4	215	75	612	286	190	105	210	180	150	100	12,5	34,4
MXV-B EI 32-407/A	1,5	2	G 1 1/4	215	75	636	286	190	105	210	180	150	100	12,5	35,4
MXV-B EI 32-408/B	2,2	3	G 1 1/4	215	75	700	286	210	118	210	180	150	100	12,5	41,5
MXV-B EI 32-410/B	2,2	3	G 1 1/4	215	75	748	286	210	118	210	180	150	100	12,5	42,5
MXV-B EI 40-803/A	1,1	1,5	G 1 1/2	225	80	593	286	190	105	246	215	190	130	14	33,4
MXV-B EI 40-804/A	1,5	2	G 1 1/2	225	80	593	286	190	105	246	215	190	130	14	34,4
MXV-B EI 40-805/B	2,2	3	G 1 1/2	225	80	663	286	190	105	246	215	190	130	14	40,5
MXV-B EI 40-806/B	2,2	3	G 1 1/2	225	80	693	286	190	105	246	215	190	130	14	41,5
MXV-B EI 40-807/A	3	4	G 1 1/2	225	80	746	294	210	118	246	215	190	130	14	52,5
MXV-B EI 40-808/A	3	4	G 1 1/2	225	80	776	294	210	118	246	215	190	130	14	56,5
MXV-B EI 40-810/B	3,7	5	G 1 1/2	225	80	953	294	210	118	246	215	190	130	14	56,5
MXV-B EI 50-1803/B	2,2	3	G 2	250	90	635	286	210	118	246	215	190	130	14	41,5
MXV-B EI 50-1804/A	3	4	G 2	250	90	701	294	210	118	246	215	190	130	14	51,5
MXV-B EI 50-1805/B	3,7	5	G 2	250	90	738	294	210	118	246	215	190	130	14	54,0
MXV-B EI 50-1806/B	4	5,5	G 2	250	90	776	294	210	118	246	215	190	130	14	55,0
MXV-B EI 50-1807/A	5,5	7,5	G 2	250	90	841	368	281	153	246	215	190	130	14	73,8
MXV-B EI 50-1808/A	5,5	7,5	G 2	250	90	878	368	281	153	246	215	190	130	14	74,8
MXV-B EI 50-1809/A	7,5	10	G 2	250	90	916	368	281	153	246	215	190	130	14	81,8
MXV-B EI 50-1810/A	7,5	10	G 2	250	90	953	368	281	153	246	215	190	130	14	82,8

CALPEDA ROMANIA - INFINITY PUMPS SRL
Tel: 0268.33.47.47 / 0722.244.944
vanzari@calpeda.ro | www.calpeda.ro

MXV-B

Vertical Multi-Stage Close Coupled Pumps

Features

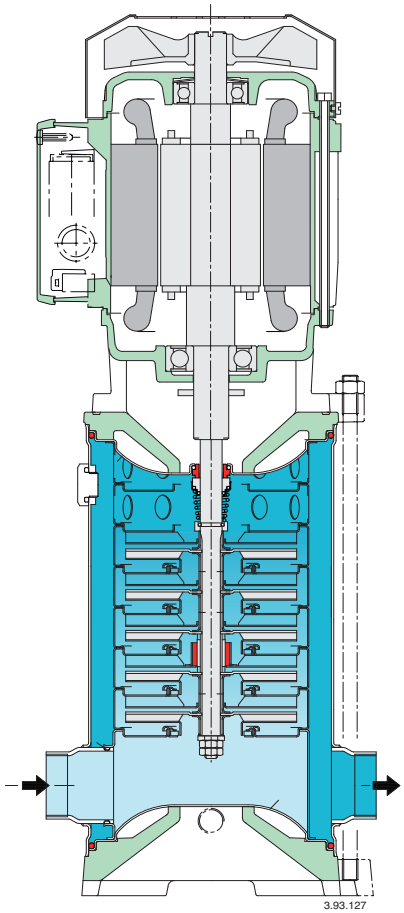

Wider Range of Application

All parts that come into contact with the liquid, including wet-end covers, are in chrome-nickel stainless steel.
With corrosion-resistant seal rings and guide ring.

Low Cost Installation

Vertical construction with reduced pump height for installation in small spaces.
In-line connections to simplify the piping layout with the possibility of inserting the pump in straight pipe-lines.
Disassembly, inspection or cleaning of internal parts without removal of piping.

Robust and Reliable

The suction and discharge nozzles arranged in-line absorb the forces of the piping on the pump without the creation of distorting loads causing local friction and early wears.
The lantern brackets compact and robust design maintains a sure alignment between rotating and fixed parts, reducing vibration.
The upper cover design prevents entrapment of air around the mechanical seal.

Low-Noise Operation

The water filled shroud around the stages and thick external walls, work together for low-noise operation.

CALPEDA ROMANIA - INFINITY PUMPS SRL
Tel: 0268.33.47.47 / 0722.244.944
vanzari@calpeda.ro | www.calpeda.ro

MXV

Vertical Multi-Stage In-Line Pumps

The electropumps MXV series comply with the European Regulation no. 547/2012.

Construction

Vertical multi-stage pumps with suction and delivery connections of the same diameter and arranged along the same axis (in-line).
Corrosion-resistant bearing sleeves lubricated by the pumped liquid.
Removal of the mechanical seal without dismantling the motor (for MXV 50, MXV 100 with motors exceeding 4 KW).
A pump with thrust bearing and sleeve coupling for use of any standard motor with IM V1 construction.

Version with frequency converter (on request)

Applications

For water supply systems.
For clean non-explosive liquids, without solid, filamentary or abrasive matter (with adaptation of sealing materials on request).
A universal pump for civil and industrial use, for pressure-boosting systems, fire-extinguishing systems, high-pressure washing plants, irrigation, agricultural uses and sport installations.

Operating conditions

Temperature of liquid: from -15 °C to +110 °C (up to +120 °C for MXV 50).
Operating environment temperature: up to 40 °C.
Maximum permissible pressure in pump casing: 25 bar.
(16 bar for pumps with oval flanges).

Motor

Standard-type: 2-pole induction motor, 50 Hz (n ≈ 2900 rpm).
Construction IM V1 (EN 60034-7).
Motor suitable for operation with frequency converter.
Classification scheme IE3 for three-phase motors.
Insulation class F.
Protection IP 55.
three-phase with rated voltage: up to 3 kW 230/400 V;
from 4 kW 400/690 V.

MXV 25, 32, 40, 50

All parts that come into contact with the liquid, including wet-end covers, are in chrome-nickel stainless steel AISI 304.

Materials (wetted parts)

Component	Material
Flange External jacket Suction casing Delivery casing Stage casing Impeller Lower cover Upper cover Spacer sleeve	Stainless Steel 1.4301 EN 10088 (AISI 304)
Pump shaft Plug	Stainless Steel 1.4305 EN 10088 (AISI 303) (for MXV 50 AISI 304)
Bearing sleeve Bearing in stage casing	Corrosion-resistant, cemented carbide Ceramic alumina
Mechanical seal ISO 3069 - KU	Hard metal/Carbon/EPDM.
Wear ring	PPS (PTFE for MXV 40)
O-rings	NBR (EPDM for MXV 50)

Direction of rotation: **clockwise** as seen from the motor.

Variants (to be specified when ordering)

Pump with threaded ports (**G**) (for MXV 25, 32, 40).
Pump with flanged ports (**F**).
Pump with oval flange ports (**O**) (for MXV 50).
Pump without motor.
Pump with standard motor.

Other variants (on request)

With counter-flanges in chrome-nickel steel.
O-rings FPM. Other mechanical seal.
Pump with motor of Client's choice (if available).
Single-phase motor 230 V, up to 2.2 kW.
Other voltage ratings.
Frequency 60 Hz.

MXV 65, 80, 100

Internal parts in contact with the liquid in chrome-nickel stainless steel, AISI 304 with pump casing and upper cover in cast iron.

Materials (wetted parts)

Component	Material
Pump casing Upper cover	Cast iron GJL 250 EN 1561
External jacket Stage casing Impeller Spacer sleeve	Stainless Steel 1.4301 EN 10088 (AISI 304)
Pump shaft Plug	Stainless Steel (AISI 303)(AISI 431 for MXV 100) Stainless Steel (AISI 303)(AISI 304 for MXV 100)
Bearing sleeve Bearing in stage casing	Corrosion-resistant, cemented carbide Ceramic alumina (Corrosion-resistant, cemented carbide for MXV 100)
Mechanical seal ISO 3069 - KU	Hard metal/Carbon/EPDM
Wear ring	PTFE
O-rings	NBR (EPDM for MXV 100)

Direction of rotation: **anticlockwise** as seen from the motor.
(**clockwise** as seen from the motor for MXV 100)

Variants (to be specified when ordering)

Pump without motor.
Pump with standard motor.

Other variants (on request)

O-rings FPM. Other mechanical seal.
Pump with motor of Client's choice (if available).
Other voltage ratings.
Frequency 60 Hz.
Pump with support feet for horizontal installation (**H1** or **H2**).
Support feet for horizontal installation, set.
Welding counter-flanges, PN 25 (steel).

CALPEDA ROMANIA - INFINITY PUMPS SRL
Tel: 0268.33.47.47 / 0722.244.944
vanzari@calpeda.ro | www.calpeda.ro

MXV EI

Vertical Multi-Stage In-Line Pumps

Pumps with frequency converter

The **MXV EI** pumps are available with power from 0,75 kW up to 22 kW, the pumps are equipped with **I-MAT** installed on board which allows to realize a variable-speed system extremely compact and efficient, ideal in applications of water supply and in the distribution of hot and cold water. The pump is equipped with transducers suitable for operation and is already programmed at the factory.

Advantages
- Energy saving
- Compact design
- Easy to use
- Programmable to suit the system requirements
- Reliability

Costruction
The system comprises of:
- Pump
- Induction motor
- I-MAT Frequency converter
- Motor adapter for the motor mounting of the frequency converter
- Connection cable between frequency converter and induction motor
- Transducers

Main features
Rated motor power output from 0,75 kW to 22 kW
Control range from 1750 to 2900 rpm (2-pole)
Protection against dry running
Protection against operations with closed connection ports
Protection against system leakages
Protection against overcurrent in the motor
Protection agains overvoltage and undervoltage of the power supply
Protection against current unbalances between phases

Operating modes

Mode at a constant pressure
with pressure sensor

In this mode, the system maintains the preset pressure when the flow required by the installation changes.

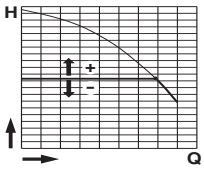

Proportional pressure mode
with pressure sensor

In this mode the system changes the working pressure according to the required flow rate.

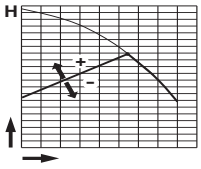

Constant flow mode
with flow meter

In this mode the system maintains a constant flow rate value in a point of the installation according to the required pressure.

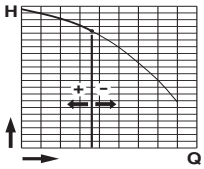

Fixed speed mode
with setting of the speed preferential rotation.

In this mode, by changing the working frequency, you may choose any operational curve included within the working range.

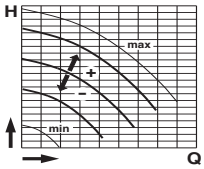

Constant temperature mode
with temperature transducer
In this mode the system keeps the temperature constant inside a system by changing the speed of the pump.

CALPEDA ROMANIA - INFINITY PUMPS SRL
Tel: 0268.33.47.47 / 0722.244.944
vanzari@calpeda.ro | www.calpeda.ro

MXV

Vertical Multi-Stage In-Line Pumps

calpeda

MXV 25, 32, 40, 50

Designation

MXV L EI 25-205 G *

- Series
- AISI 316L vesion
- With frequency converter I-MAT
- DN ports in mm
- Rated capacity in m³/h (n ≈ 2900 rpm)
- Number of stages

Construction variants

- special seal code (no code = standard seal)
- threaded ports — G
- flanged ports — F
- oval flange ports — O
- with motor (or without motor)
- * with no further designation = with standard motor

MXV 65, 80, 100

Designation

MXV L EI 65-3205 H1 *

- Series
- AISI 316L vesion
- With frequency converter I-MAT
- DN ports in mm
- Rated capacity in m³/h (n ≈ 2900 rpm)
- Number of stages

Construction variants

- special seal code (no code = standard seal)
- with support feet for horizontal installation H, variant 1
- with motor (or without motor)
- * with no further designation = with standard motor

Pipe connection

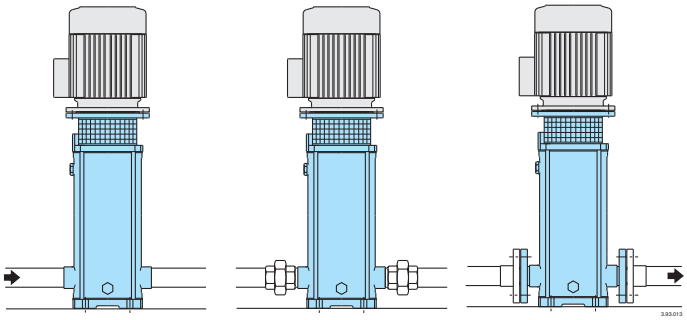

Pump with threaded ports: pipes screwed into the ports

Pump with threaded ports: pipes with union couplings (locally available)

Pump with flanged ports: pipes with counter-flanges

Installations

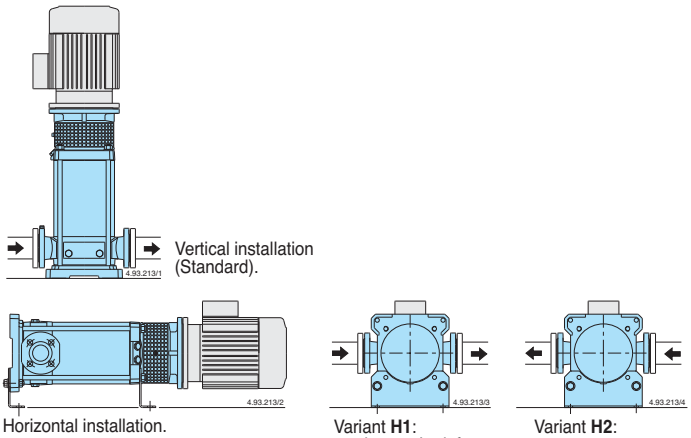

Vertical installation (Standard).

Horizontal installation.

Variant **H1**: suction on the left, delivery on the right.

Variant **H2**: suction on the right, delivery on the left.

Variable parts

Pump size MXV			Number of stages	Stage casings with bearing
25-204	32-404	40-804	4	1
25-205	32-405	40-805	5	1
25-206	32-406	40-806	6	1
25-207	32-407	40-807	7	1
25-208	32-408	40-808	8	1
25-210	32-410	40-810	10	1
		40-811	11	2
25-212	32-412		12	2
		40-813	13	2
25-214	32-414		14	2
		40-815	15	2
25-216	32-416		16	2
25-218	32-418		18	2
		40-817	17	3
		40-819	19	3
25-220			20	3

Variable parts

Pump size MXV				Number of stages	Stage casings with bearing
50-1501	50-2001		80-4801	1	1
50-1502	50-2002	65-3202	80-4802	2	1
50-1503	50-2003	65-3203	80-4803	3	1
50-1504	50-2004	65-3204	80-4804	4	1
50-1505	50-2005	65-3205	80-4805	5	1
50-1506	50-2006	65-3206		6	1
50-1507	50-2007	65-3207		7	1
50-1508	50-2008			8	1
			80-4806	6	2
			80-4807	7	2
		65-3208	80-4808	8	2
50-1509	50-2009	65-3209		9	2
50-1510	50-2010	65-3210		10	2
50-1511	50-2011			11	2
50-1512	50-2012	65-3212		12	2
50-1513	50-2013			13	2
50-1514	50-2014			14	3
50-1515	50-2015			15	3
50-1516	50-2016			16	3
50-1517	50-2017			17	3

CALPEDA ROMANIA - INFINITY PUMPS SRL
Tel: 0268.33.47.47 / 0722.244.944
vanzari@calpeda.ro | www.calpeda.ro

MXV

Vertical Multi-Stage In-Line Pumps

Coverage chart

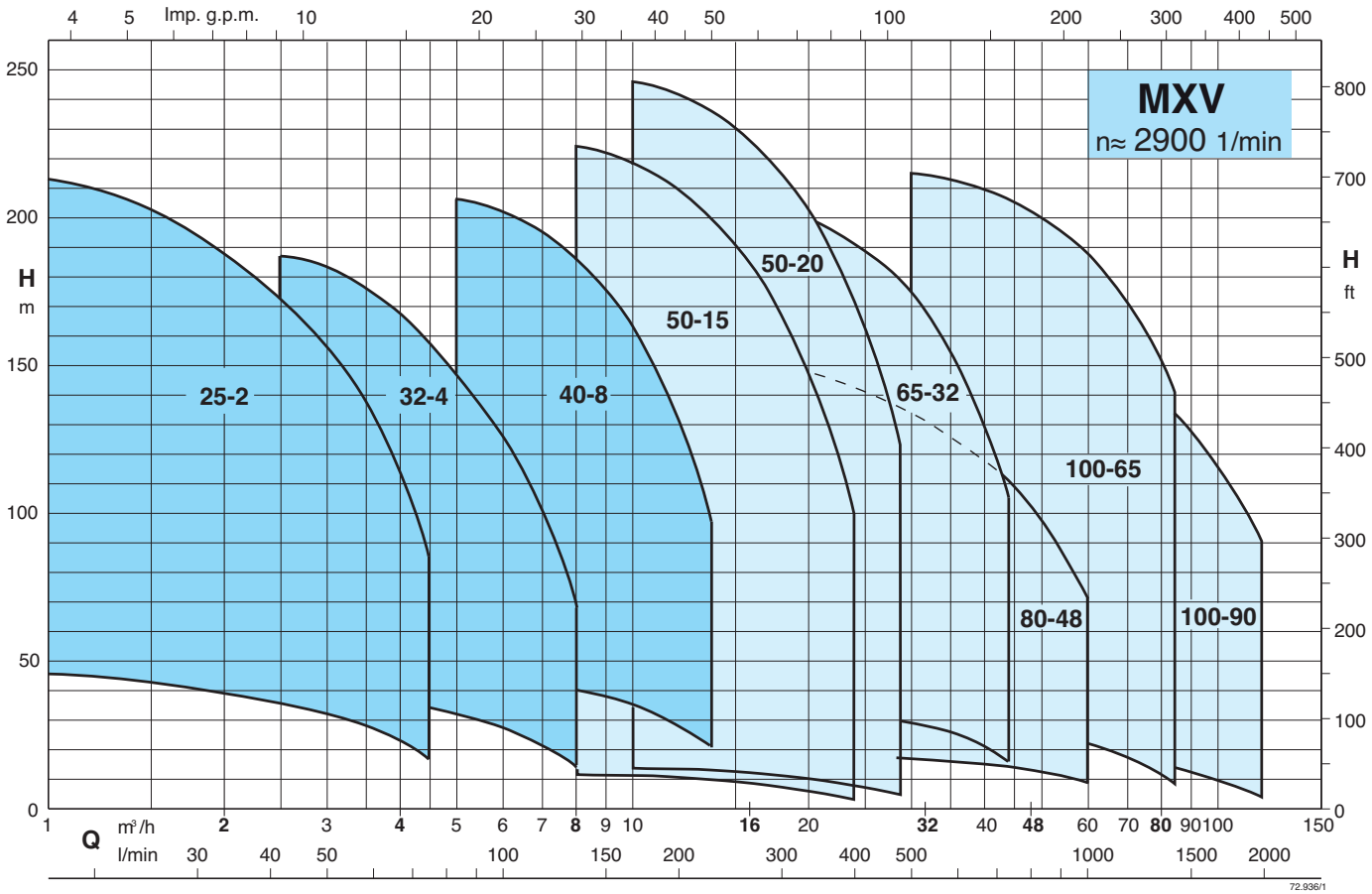

CALPEDA ROMANIA - INFINITY PUMPS SRL
Tel: 0268.33.47.47 / 0722.244.944
vanzari@calpeda.ro | www.calpeda.ro

MXV 25-2 Vertical Multi-Stage In-Line Pumps

Characteristic curves and performance n ≈ 2900 rpm

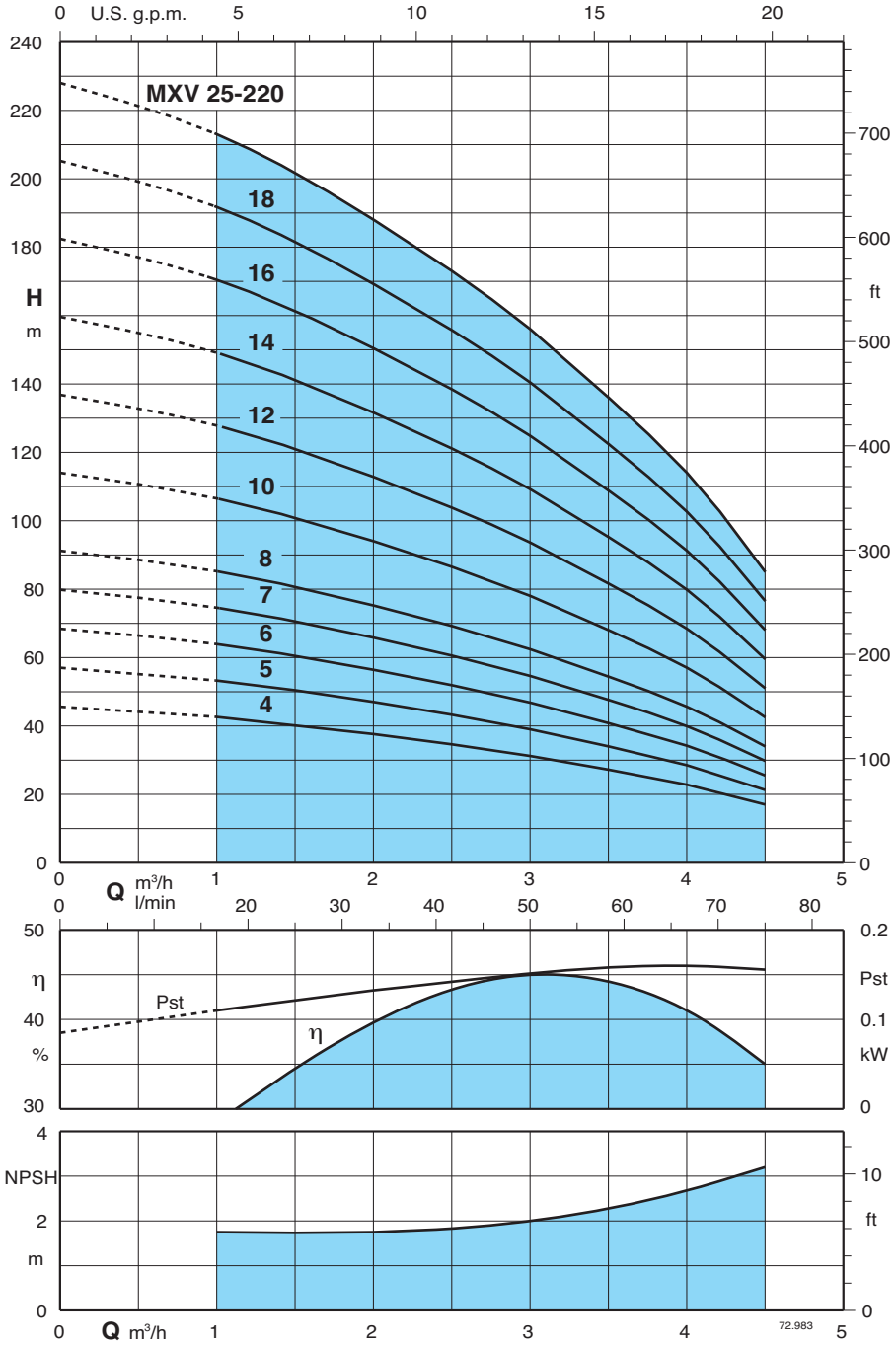

Test results with clean cold water, without gas content.
A safety margin of + 0.5 m is recommended for the NPSH value.
Tolerances in accordance with UNI EN ISO 9906:2012

Head and power values valid for liquids with density ρ = 1,0 kg/dm³ and kinematic viscosity ν = max 20 mm²/sec.

Pst = Power with reference to one stage.
A* Calpeda motor currents

Pump type	230 V	400 V	Motor power		Q m³/h	0	1	1,5	2	2,5	3	3,5	4	4,5
	A*	A*	kW	HP	Q l/min	0	16,6	25	33,3	41,6	50	58,3	66,6	75
MXV 25-204/C	4	2,3	0,75	1		44	42,5	40	37,5	34,5	31	27	22,5	17
MXV 25-205/C	4	2,3	0,75	1		56	53	50	47	43	39	34	28	21
MXV 25-206/D	4,7	2,7	1,1	1,5		68	63,5	60,5	56	51,5	46,5	40,5	34	25
MXV 25-207/D	4,7	2,7	1,1	1,5		79,5	74	70,5	65,5	60	54,5	47,5	39,5	30
MXV 25-208/D	7,4	4,3	1,5	2	H	91	85	80,5	75	69	62	54	45,5	34
MXV 25-210/D	7,4	4,3	1,5	2	m	114	106	101	94	86	78	68	57	42
MXV 25-212/D	9,2	5,3	2,2	3		136	127	121	112	103	93,5	81,5	68	51
MXV 25-214/D	9,2	5,3	2,2	3		159	149	141	131	121	109	95	79,5	59
MXV 25-216/C	11,4	6,6	3	4		182	170	161	150	138	124	108	91	68
MXV 25-218/C	11,4	6,6	3	4		205	191	181	169	155	140	122	102	76
MXV 25-220/C	11,4	6,6	3	4		228	213	202	188	173	156	136	114	85

CALPEDA ROMANIA - INFINITY PUMPS SRL
Tel: 0268.33.47.47 / 0722.244.944
vanzari@calpeda.ro | www.calpeda.ro

MXV 32-4 Vertical Multi-Stage In-Line Pumps

Characteristic curves and performance n ≈ 2900 rpm

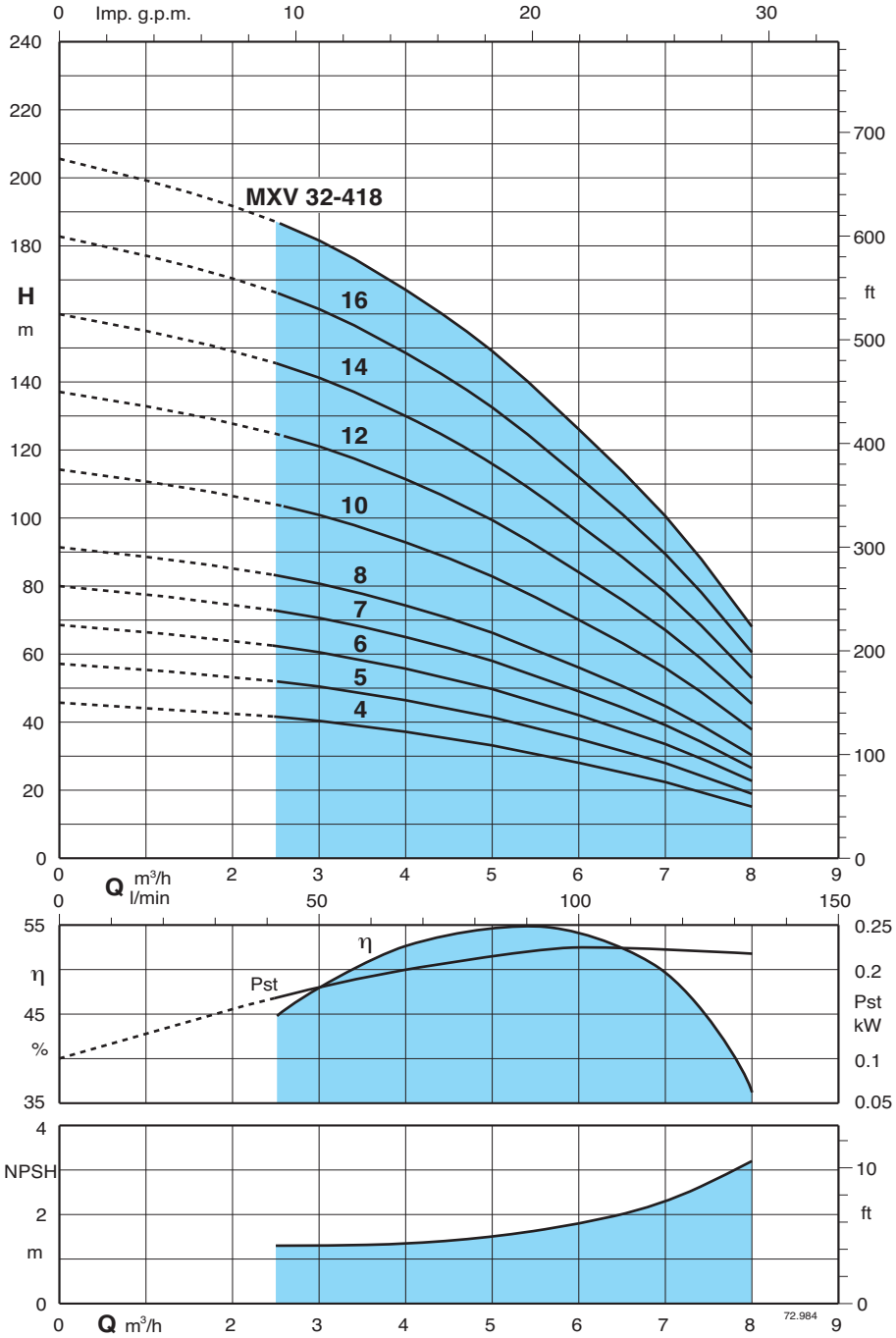

Test results with clean cold water, without gas content.
A safety margin of + 0.5 m is recommended for the NPSH value.
Tolerances in accordance with UNI EN ISO 9906:2012

Head and power values valid for liquids with density ρ = 1,0 kg/dm³ and kinematic viscosity ν = max 20 mm²/sec.

Pst = Power with reference to one stage.
A* Calpeda motor currents

Pump type	230 V	400 V	Motor power		Q m³/h	0	2,5	3	3,5	4	4,5	5	6	7	8
	A*	A*	kW	HP	Q l/min	0	41,6	50	58,3	66,6	75	83,3	100	116,6	133,3
MXV 32-404/D	4,7	2,7	1,1	1,5		45	41,5	40	38,5	36,5	34,5	32,5	27,5	22	14,5
MXV 32-405/D	4,7	2,7	1,1	1,5		56	51,5	50	48	46	43,5	41	34,5	27,5	18,5
MXV 32-406/D	7,4	4,3	1,5	2		68	62	60	58	55,5	52,5	49,5	42	33,5	22,5
MXV 32-407/D	7,4	4,3	1,5	2		79,5	72,5	70,5	68	65	61,5	58	49	39	26,5
MXV 32-408/D	9,2	5,3	2,2	3	H	91	83	80,5	78	74	70	66	56	44,5	30
MXV 32-410/D	9,2	5,3	2,2	3	m	114	104	101	97,5	93	88	83	70	56	38
MXV 32-412/C	11,4	6,6	3	4		136	124	121	117	111	105	99,5	84	67	45,5
MXV 32-414/C	11,4	6,6	3	4		159	145	141	136	130	123	116	98	78	53
MXV 32-416/D		9,6	4	5,5		182	166	161	156	148	140	132	112	89,5	60,5
MXV 32-418/D		9,6	4	5,5		205	187	181	175	167	158	149	126	100	68

CALPEDA ROMANIA - INFINITY PUMPS SRL
Tel: 0268.33.47.47 / 0722.244.944
vanzari@calpeda.ro | www.calpeda.ro

MXV 40-8 Vertical Multi-Stage In-Line Pumps

Characteristic curves and performance n ≈ 2900 rpm

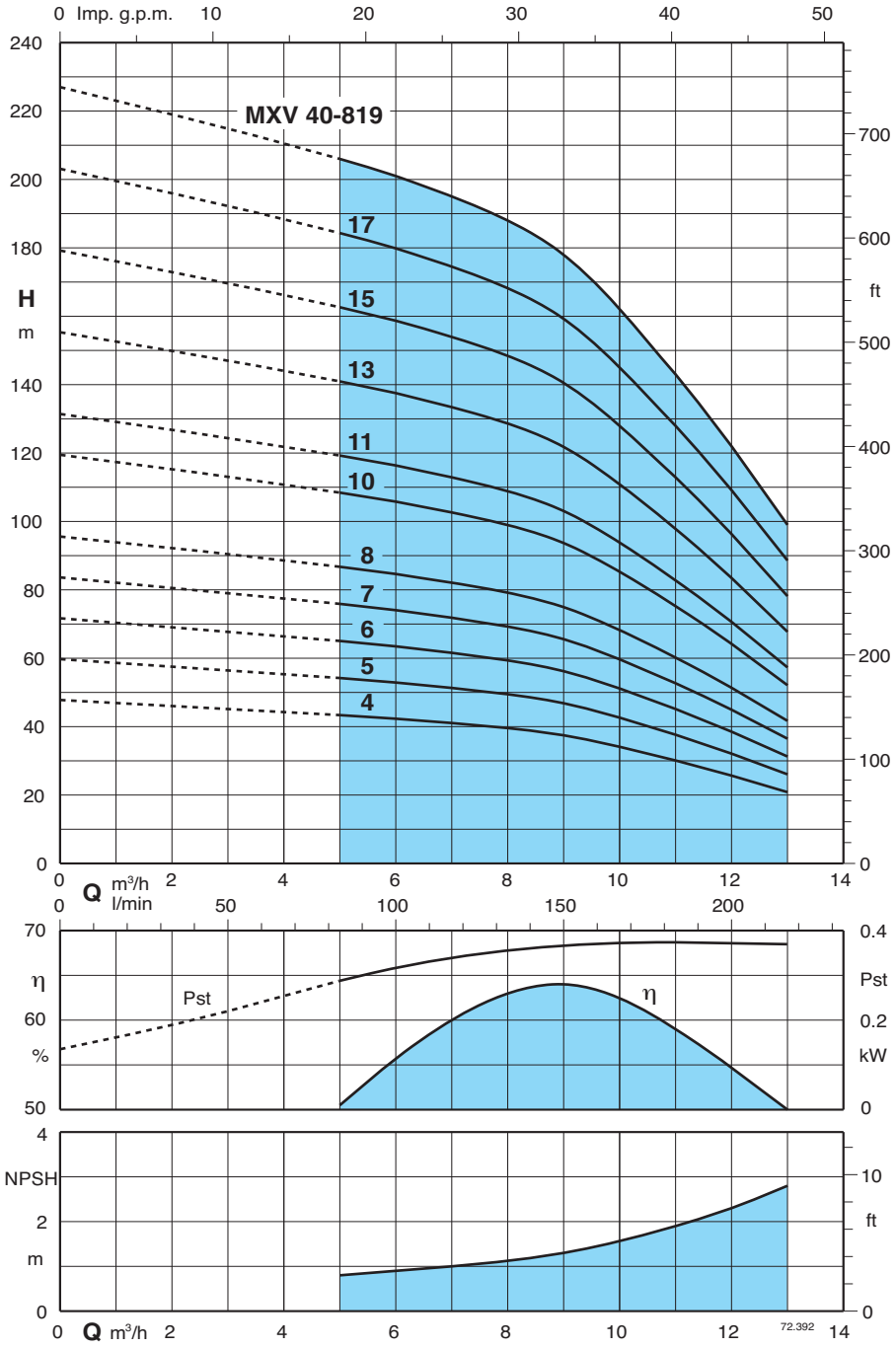

Test results with clean cold water, without gas content.
A safety margin of + 0.5 m is recommended for the NPSH value.
Tolerances in accordance with UNI EN ISO 9906:2012

Head and power values valid for liquids with density ρ = 1,0 kg/dm³ and kinematic viscosity ν = max 20 mm²/sec.

Pst = Power with reference to one stage.
A* Calpeda motor currents

Pump type	230 V	400 V	Motor power		Q m³/h	0	5	6	7	8	9	10	11	12	13
	A*	A*	kW	HP	Q l/min	0	83,3	100	116,6	133,3	150	166,6	183,3	200	216,6
MXV 40-804/D	7,4	4,3	1,5	2		47	43	42	41	40	37	34	30	26	21
MXV 40-805/D	9,2	5,3	2,2	3		59	54	53	51	50	47	43	38	32	26
MXV 40-806/D	9,2	5,3	2,2	3		71	65	63	62	59	56	51	45	39	31
MXV 40-807/C	11,4	6,6	3	4		83	76	74	72	69	66	60	53	45	36
MXV 40-808/C	11,4	6,6	3	4	H	95	87	85	82	79	75	69	60	51	42
MXV 40-810/D		9,6	4	5,5	m	119	109	106	103	99	94	86	75	64	52
MXV 40-811/D		9,6	4	5,5		131	119	116	113	109	103	94	83	71	57
MXV 40-813/C		10,9	5,5	7,5		155	141	138	134	129	122	111	98	84	68
MXV 40-815/C		10,9	5,5	7,5		179	163	159	154	149	141	128	113	96	78
MXV 40-817/C		14,3	7,5	10		202	184	180	175	168	159	145	128	109	89
MXV 40-819/C		14,3	7,5	10		226	206	201	195	188	178	162	143	122	99

CALPEDA ROMANIA - INFINITY PUMPS SRL
Tel: 0268.33.47.47 / 0722.244.944
vanzari@calpeda.ro | www.calpeda.ro

MXV 50-15 Vertical Multi-Stage In-Line Pumps

Characteristic curves and performance n ≈ 2900 rpm

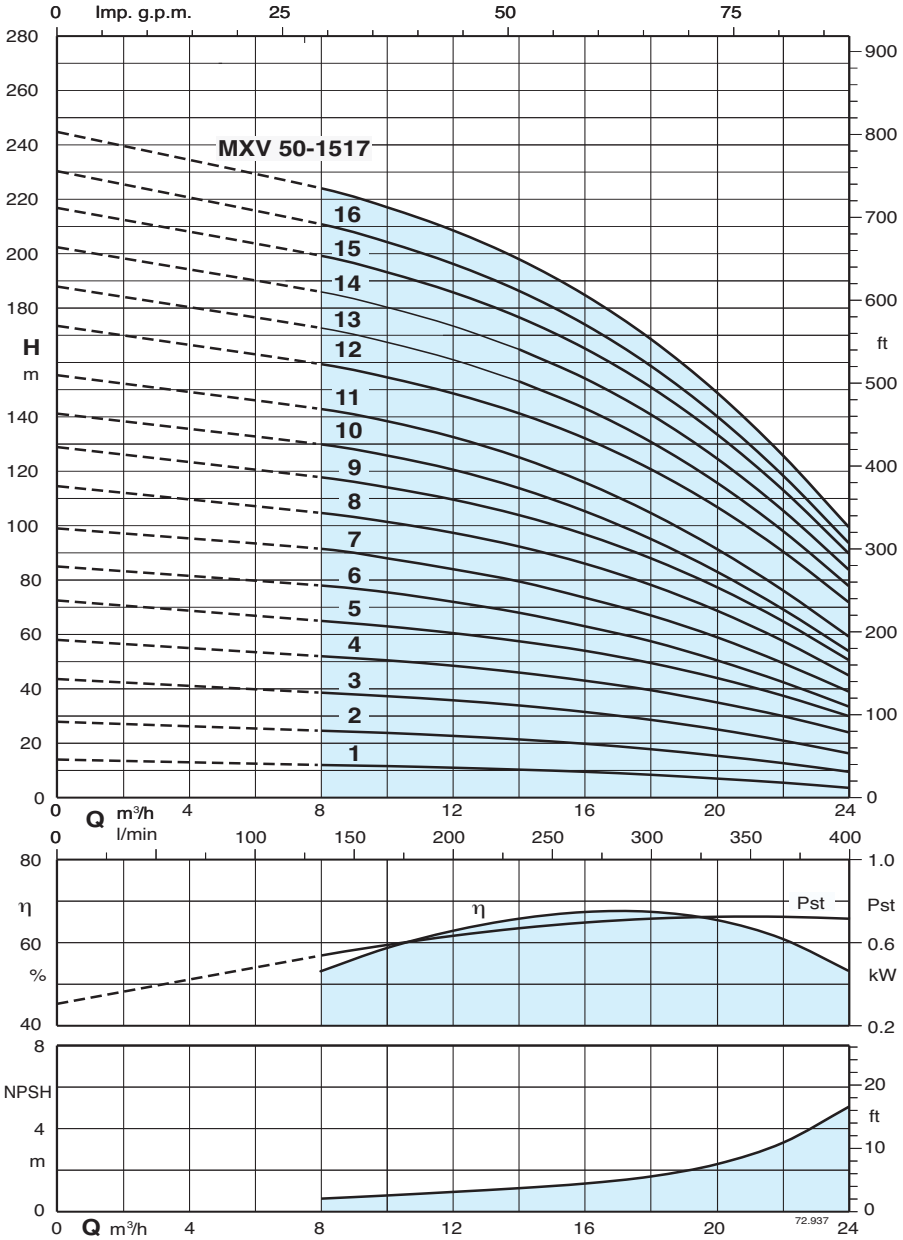

Test results with clean cold water, without gas content.
A safety margin of + 0.5 m is recommended for the NPSH value.
Tolerances in accordance with UNI EN ISO 9906:2012

Head and power values valid for liquids with density ρ = 1,0 kg/dm³ and kinematic viscosity ν = max 20 mm²/sec.

Pst = Power with reference to one stage.
A* Calpeda motor currents

Pump type	230 V	400 V	Motor power		Q m³/h	0	8	10	12	14	16	18	20	22	24
	A*	A*	kW	HP	Q l/min	0	133,3	166,6	200	233	266	300	333	366	400
MXV 50-1501	4,7	2,7	1,1	1,5		14,0	12,0	11,6	11,0	10,3	9,5	8,4	7,0	5,5	3,6
MXV 50-1502	7,4	4,3	1,5	2		27,9	24,6	23,8	22,7	21,4	19,8	17,8	15,4	12,7	9,5
MXV 50-1503	9,2	5,3	2,2	3		43,6	38,6	37,3	35,8	33,9	31,5	28,6	25,1	21,0	16,3
MXV 50-1504	11,4	6,6	3	4		58,0	52,0	50,5	48,5	46,0	43,0	39,5	35,0	30,0	24,0
MXV 50-1505		9,6	4	5,5		72,5	65,0	63,0	60,5	57,5	54,0	49,5	44,0	37,5	30,0
MXV 50-1506		10,9	5,5	7,5		85,0	78,0	75,5	72,0	68,0	63,0	57,5	50,5	42,5	33,5
MXV 50-1507		10,9	5,5	7,5		99,0	91,5	88,0	84,0	79,5	73,5	67,0	59,0	49,5	39,0
MXV 50-1508		14,3	7,5	10	H	115	105	101	97	92	86	78	69	58	45
MXV 50-1509		14,3	7,5	10	m	129	118	114	110	104	97	88	77	65	51
MXV 50-1510		14,3	7,5	10		141	130	126	121	114	105	95	83	69	54
MXV 50-1511		18,5	9,2	12,5		155	143	138	133	125	116	105	91	76	59
MXV 50-1512		18,5	9,2	12,5		173	159	155	149	141	132	121	107	91	72
MXV 50-1513		21,5	11	15		188	173	167	161	153	143	131	116	98	78
MXV 50-1514		21,5	11	15		202	186	180	173	165	154	141	125	106	84
MXV 50-1515		21,5	11	15		217	199	193	186	177	165	151	134	113	90
MXV 50-1516		27,3	15	20		230	211	204	196	186	174	159	140	119	94
MXV 50-1517		27,3	15	20		245	224	217	209	198	185	169	149	126	100

CALPEDA ROMANIA - INFINITY PUMPS SRL
Tel: 0268.33.47.47 / 0722.244.944
vanzari@calpeda.ro | www.calpeda.ro

MXV 50-20 Vertical Multi-Stage In-Line Pumps

Characteristic curves and performance n ≈ 2900 rpm

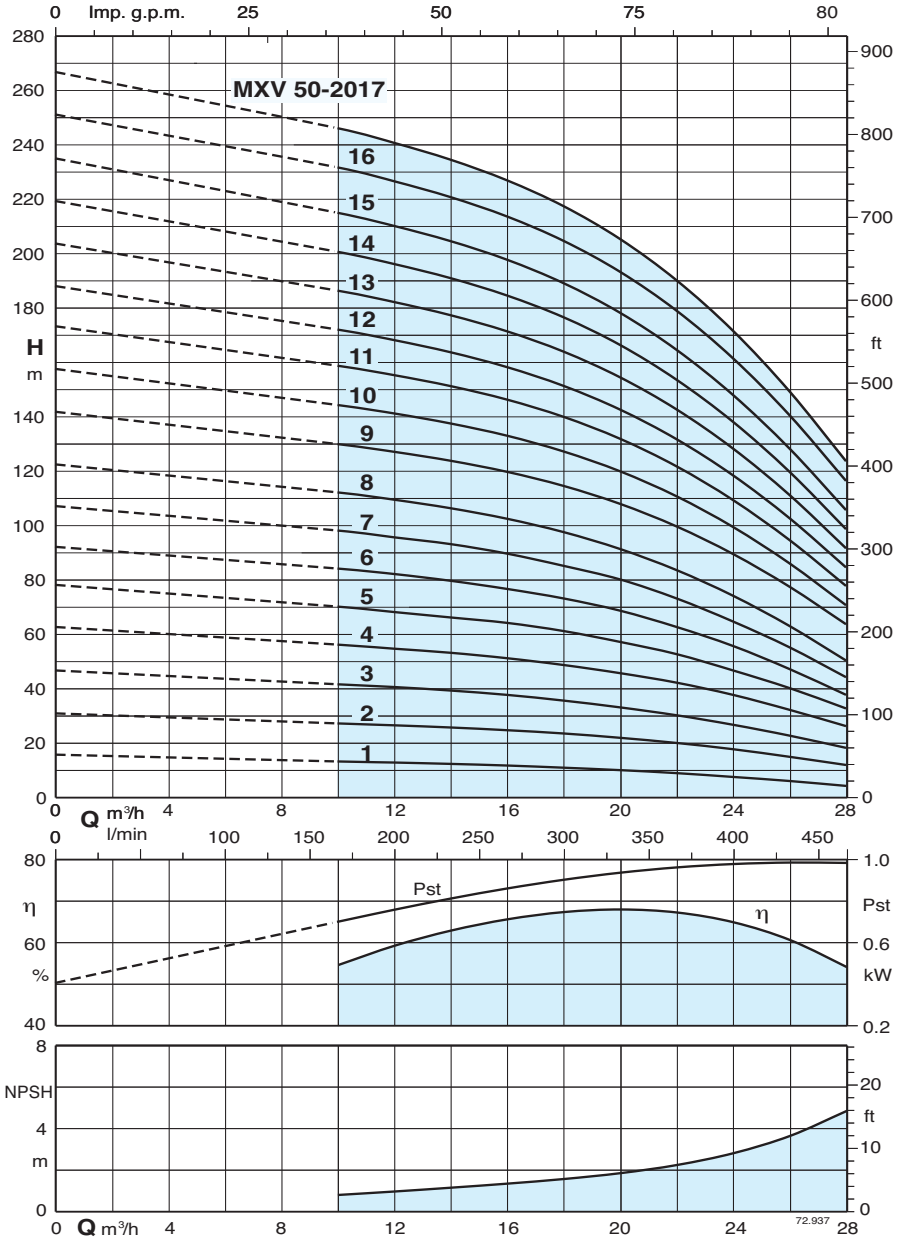

Test results with clean cold water, without gas content.
A safety margin of + 0.5 m is recommended for the NPSH value.
Tolerances in accordance with UNI EN ISO 9906:2012

Head and power values valid for liquids with density ρ = 1,0 kg/dm³ and kinematic viscosity ν = max 20 mm²/sec.

Pst = Power with reference to one stage.
A* Calpeda motor currents

Pump type	230 V	400 V	Motor power		Q m³/h	0	10	12	14	16	18	20	22	24	26	28
	A*	A*	kW	HP	Q l/min	0	166,6	200	233	266	300	333	366	400	433	466
MXV 50-2001	4,7	2,7	1,1	1,5		15,5	13,0	12,6	12,1	11,5	10,7	9,8	8,7	7,3	5,8	4,0
MXV 50-2002	9,2	5,3	2,2	3		30,7	27,0	26,3	25,5	24,5	23,3	21,7	19,8	17,5	14,7	11,7
MXV 50-2003	11,4	6,6	3	4		46,5	41,4	40,4	39,1	37,5	35,4	32,9	30,0	26,5	22,5	18,0
MXV 50-2004		9,6	4	5,5		62,5	56,0	54,5	53,0	51,0	48,5	45,5	42,0	37,5	32,0	26,0
MXV 50-2005		10,9	5,5	7,5		78,0	70,0	68,0	66,0	64,0	61,0	57,0	52,5	46,5	40,0	32,5
MXV 50-2006		14,3	7,5	10		92,0	84,0	82,0	79,5	76,5	73,0	68,5	62,5	55,5	47,0	37,5
MXV 50-2007		14,3	7,5	10		107,0	98,0	95,5	93,0	89,5	85,0	80,0	73,0	64,5	55,0	44,0
MXV 50-2008		18,5	9,2	12,5	H	122	112	109	106	102	97	91	83	74	63	50
MXV 50-2009		18,5	9,2	12,5	m	142	130	127	124	120	114	108	100	89	77	63
MXV 50-2010		21,5	11	15		158	144	141	137	133	127	120	111	99	86	71
MXV 50-2011		21,5	11	15		173	159	155	151	146	140	132	122	109	94	78
MXV 50-2012		27,3	15	20		188	172	168	164	158	151	143	132	118	103	84
MXV 50-2013		27,3	15	20		204	186	182	177	171	164	154	143	128	111	91
MXV 50-2014		27,3	15	20		219	201	196	191	185	177	166	154	138	120	99
MXV 50-2015		27,3	15	20		235	215	210	205	198	189	178	165	148	128	106
MXV 50-2016		34	18,5	25		251	232	227	221	214	205	193	179	161	140	116
MXV 50-2017		34	18,5	25		267	246	241	235	227	217	205	190	172	149	124

CALPEDA ROMANIA - INFINITY PUMPS SRL
Tel: 0268.33.47.47 / 0722.244.944
vanzari@calpeda.ro | www.calpeda.ro

MXV 65-32 Vertical Multi-Stage In-Line Pumps

Characteristic curves and performance n ≈ 2900 rpm

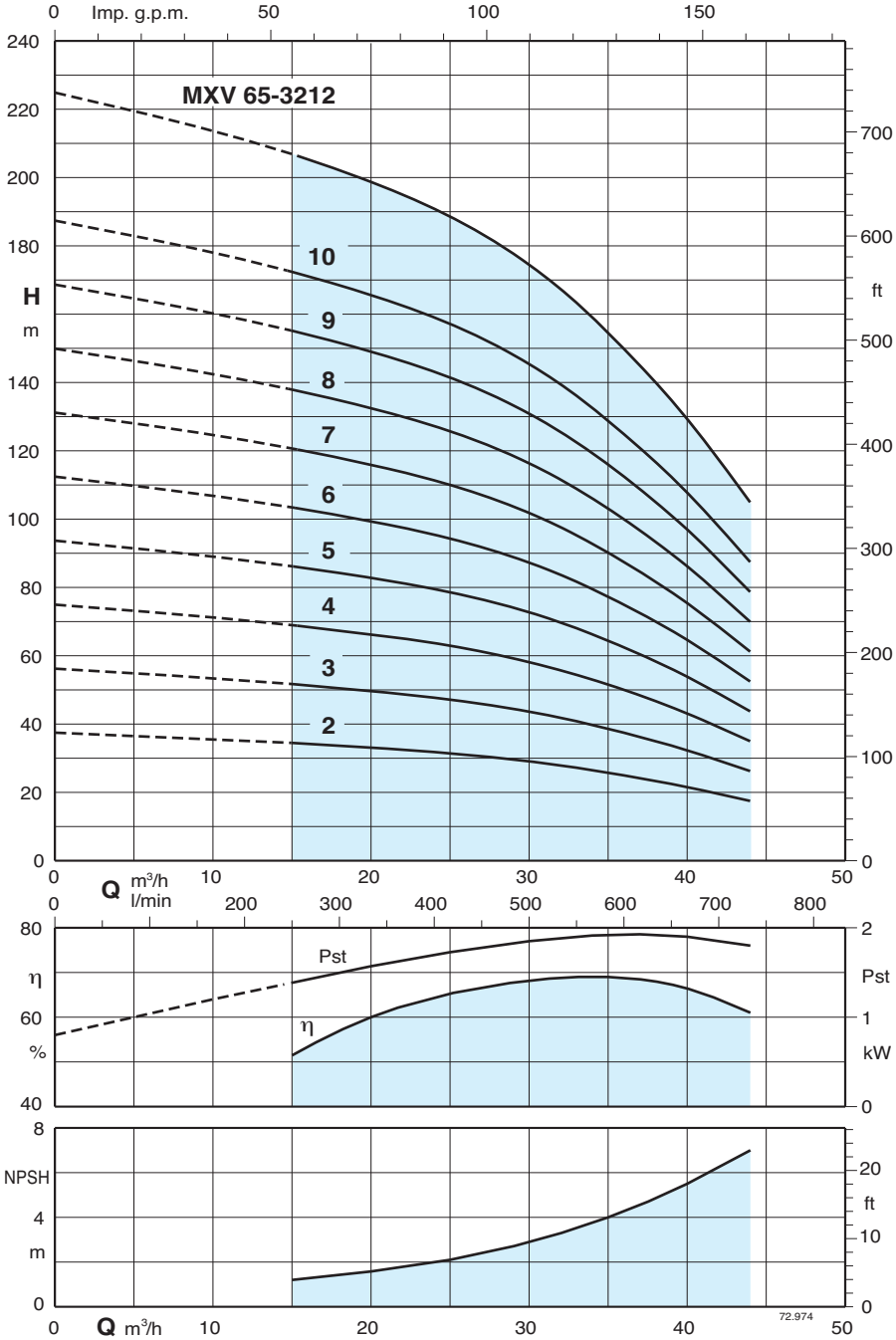

Test results with clean cold water, without gas content.
A safety margin of + 0.5 m is recommended for the NPSH value.
Tolerances in accordance with UNI EN ISO 9906:2012

Head and power values valid for liquids with density ρ = 1,0 kg/dm³ and kinematic viscosity ν = max 20 mm²/sec.

Pst = Power with reference to one stage.
A* Calpeda motor currents

Pump type	230 V	400 V	Motor power		Q m³/h	0	15	21	24	27	30	33	36	39	44
	A*	A*	kW	HP	l/min	0	250	350	400	450	500	550	600	650	733
MXV 65-3202/D		9,6	4	5,5		37	34	32	31	30	29	27	24,5	22	17
MXV 65-3203/C		10,9	5,5	7,5		55,5	51	49	47,5	46	43,5	40,5	37	33,5	25,5
MXV 65-3204/C		14,3	7,5	10		75	69	65,5	63,5	61	58,5	54,5	50	45	35
MXV 65-3205/D		21,5	11	15		93,5	86	82	79,5	77	73	68	62,5	56,5	44
MXV 65-3206/D		21,5	11	15	H	112	103	98,5	95,5	92	87	82	75	67,5	52,5
MXV 65-3207/D		27,3	15	20	m	131	121	115	111	107	102	95,5	87,5	79	61,5
MXV 65-3208/D		27,3	15	20		150	138	131	127	123	116	109	100	90	70
MXV 65-3209/E		34	18,5	25		168	155	148	143	138	130	122	112	101	79
MXV 65-3210/E		34	18,5	25		187	172	164	159	154	145	136	125	112	87,5
MXV 65-3212/D		41	22	30		225	207	197	191	185	174	163	150	135	105

CALPEDA ROMANIA - INFINITY PUMPS SRL
Tel: 0268.33.47.47 / 0722.244.944
vanzari@calpeda.ro | www.calpeda.ro

MXV 80-48 Vertical Multi-Stage In-Line Pumps

Characteristic curves and performance n ≈ 2900 rpm

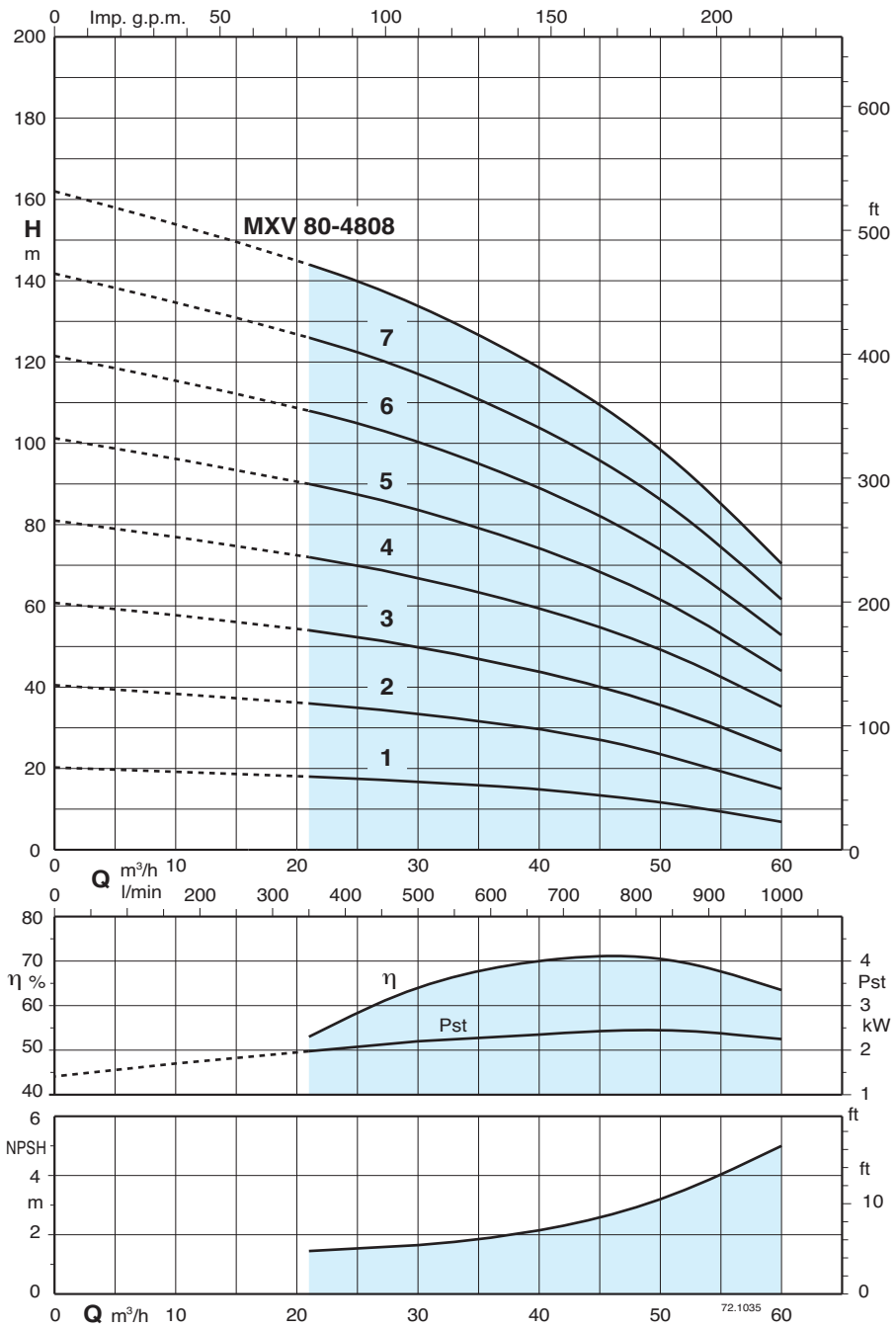

Test results with clean cold water, without gas content.
A safety margin of + 0.5 m is recommended for the NPSH value.
Tolerances in accordance with UNI EN ISO 9906:2012

Head and power values valid for liquids with density ρ = 1,0 kg/dm³ and kinematic viscosity ν = max 20 mm²/sec.

Pst = Power with reference to one stage.
A* Calpeda motor currents

Pump type	230 V	400 V	Motor power		Q m³/h	0	21	27	33	39	45	48	51	54	60
	A*	A*	kW	HP	Q l/min	0	350	450	550	650	750	800	850	900	1000
MXV 80-4801/D		9,6	4	5,5		20	18	17	16	15	13	12	10,7	9,5	7
MXV 80-4802/C		10,9	5,5	7,5		40,5	36	34,5	32,5	29,5	26,5	24,5	22	20	15,5
MXV 80-4803/C		14,3	7,5	10		61	54	51	48	44	40	37	34	31	24,5
MXV 80-4804/D		21,5	11	15	H	81	72	69	65	60	55	51,5	48	44	35
MXV 80-4805/D		27,3	15	20	m	101	90	86	81	75	68,5	64,5	60	55	44
MXV 80-4806/D		27,3	15	20		121	108	103	97	90	82	77,5	72	66	53
MXV 80-4807/E		34	18,5	25		142	126	120	113	105	96	90	84	77	61,5
MXV 80-4808/D		41	22	30		162	144	137	129	120	109	103	96	88	70,5

CALPEDA ROMANIA - INFINITY PUMPS SRL
Tel: 0268.33.47.47 / 0722.244.944
vanzari@calpeda.ro | www.calpeda.ro

MXV 100-65 Vertical Multi-Stage In-Line Pumps

Characteristic curves and performance n ≈ 2900 rpm

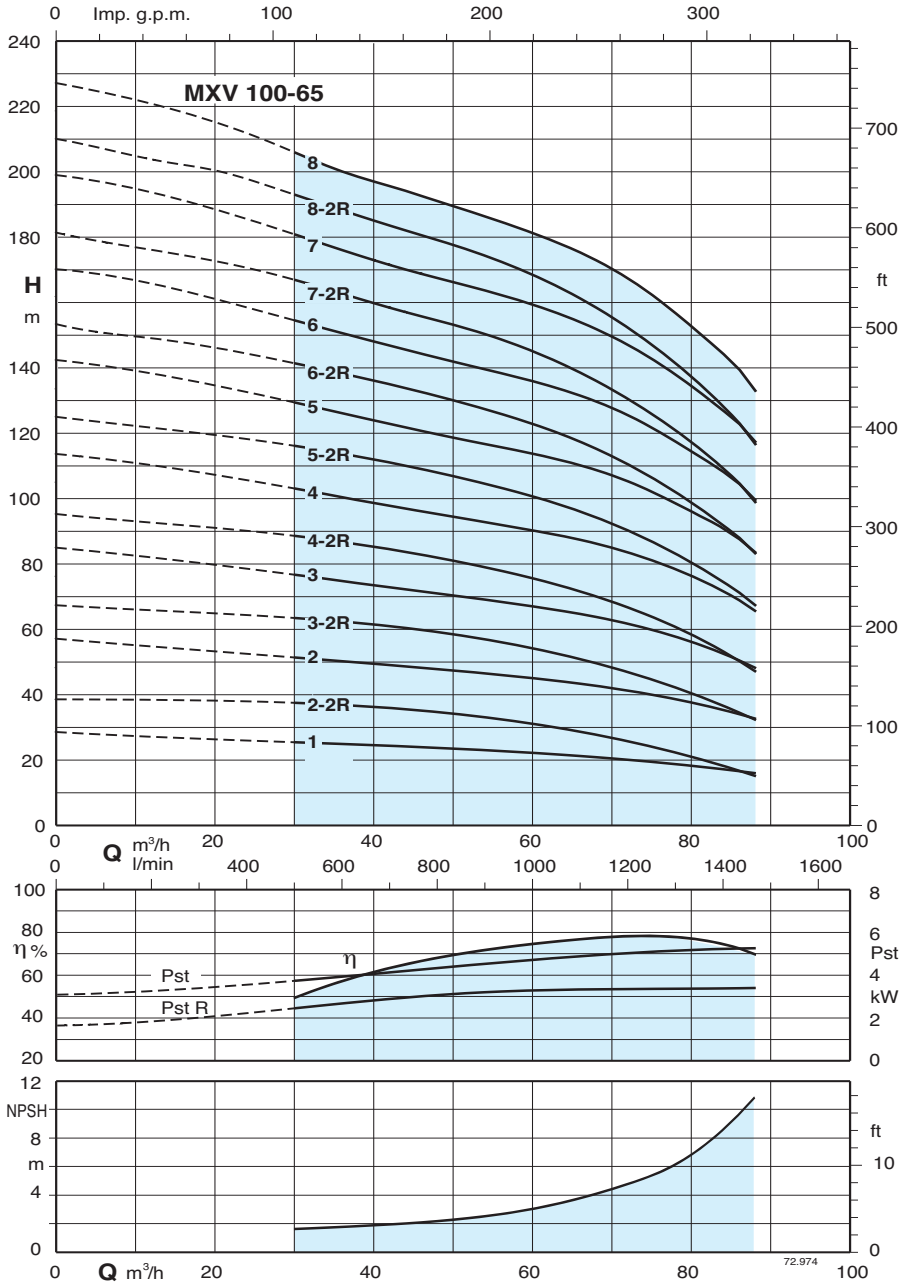

Test results with clean cold water, without gas content.
A safety margin of + 0.5 m is recommended for the NPSH value.
Tolerances in accordance with UNI EN ISO 9906:2012

Head and power values valid for liquids with density ρ = 1,0 kg/dm³ and kinematic viscosity ν = max 20 mm²/sec.

Pst = Power with reference to one stage.
A* Calpeda motor currents

Pump type	400 V	Motor power		Q m³/h	0	30	36	42	45	54	60	72	78	85
	A*	kW	HP	Q l/min	0	500	600	700	750	900	1000	1200	1300	1417
MXV(L) 100-6501	10,9	5,5	7,5		28	25	24,5	24	23,5	22,5	22	20	18,5	16,5
MXV(L) 100-6502-2R	14,3	7,5	10		39	37,5	36,5	35,5	35	33	31	25	22	17,5
MXV(L) 100-6502	21,5	11	15		56,5	51	49,5	48,5	48	46	45	41	38,5	34,5
MXV(L) 100-6503-2R	27,3	15	20		67,5	63,5	62	60,5	59,5	56,5	54	46,5	42	35,5
MXV(L) 100-6503/A	34	18,5	25		84,5	76	74	72,5	71,5	69	67	61,5	57,5	51,5
MXV(L) 100-6504-2R/A	34	18,5	25		95,5	88,5	86	84	83	79	75,5	66	60,5	52
MXV(L) 100-6504	41	22	30		113	102	100	97,5	96,5	92,5	90,5	83	78	70
MXV(L) 100-6505-2R	54	30	40		125	116	113	110	109	104	101	90	83	72,5
MXV(L) 100-6505	54	30	40		142	129	125	122	121	116	114	105	98,5	88,5
MXV(L) 100-6506-2R	54	30	40	H	153	141	137	134	133	127	123	110	102	89,5
MXV(L) 100-6506	64	37	50	m	170	154	150	147	145	139	136	125	117	105
MXV(L) 100-6507-2R	64	37	50		181	166	162	158	156	150	145	130	120	106
MXV(L) 100-6507	77	45	60		199	180	175	172	169	163	159	147	138	124
MXV(L) 100-6508-2R	77	45	60		210	193	188	184	181	174	168	152	141	125
MXV(L) 100-6508	77	45	60		227	206	200	196	193	186	181	167	157	141

CALPEDA ROMANIA - INFINITY PUMPS SRL
Tel: 0268.33.47.47 / 0722.244.944
vanzari@calpeda.ro | www.calpeda.ro

MXV 100-90 Vertical Multi-Stage In-Line Pumps

Characteristic curves and performance n ≈ 2900 rpm

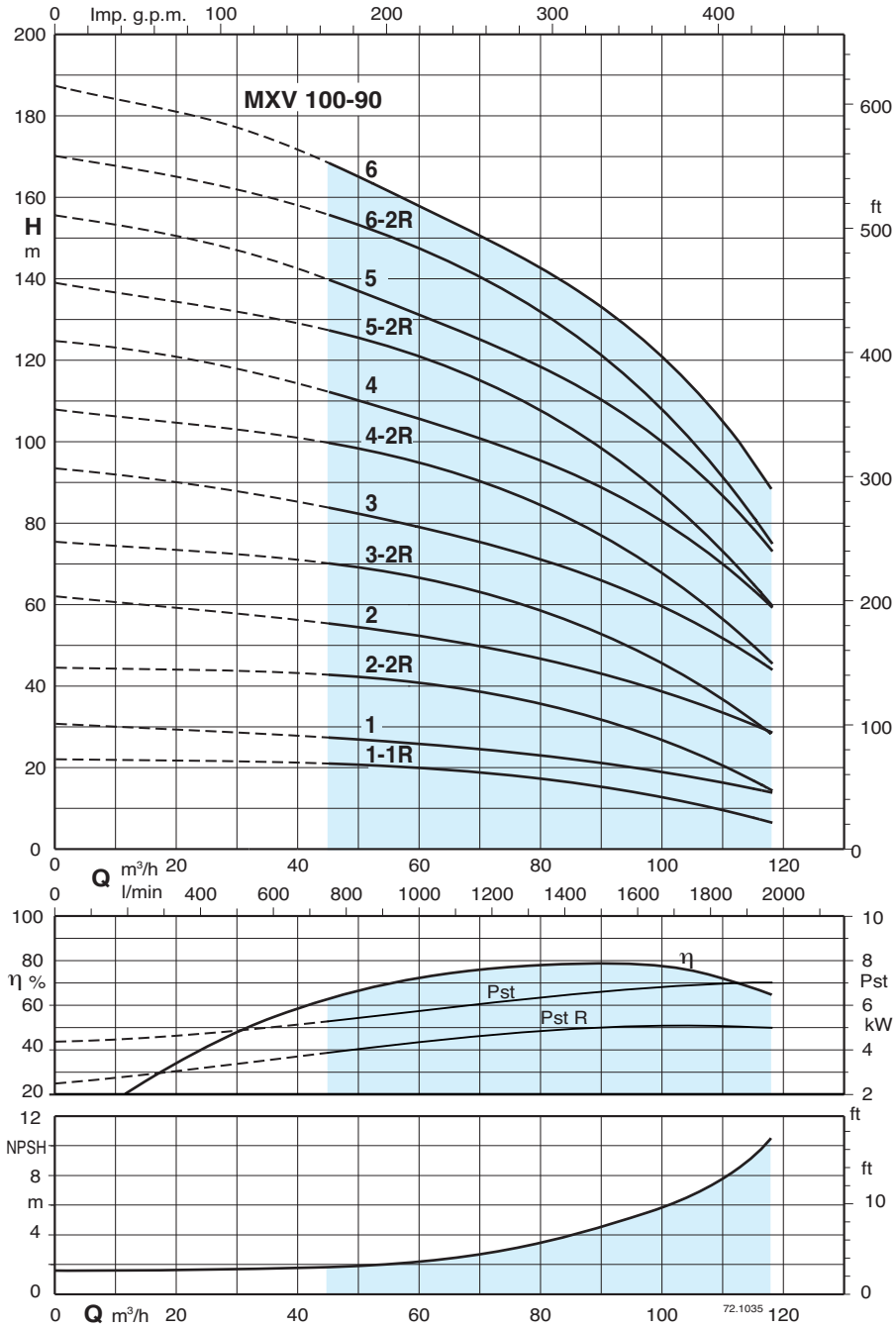

Test results with clean cold water, without gas content.
A safety margin of + 0.5 m is recommended for the NPSH value.
Tolerances in accordance with UNI EN ISO 9906:2012

Head and power values valid for liquids with density ρ = 1,0 kg/dm³ and kinematic viscosity ν = max 20 mm²/sec.

Pst = Power with reference to one stage.
A* Calpeda motor currents

Pump type	400 V	Motor power		Q m³/h	0	45	54	60	72	78	85	96	108	118
	A*	kW	HP	Q l/min	0	750	900	1000	1200	1300	1417	1600	1800	1967
MXV(L) 100-9001-1R	10,9	5,5	7,5	H m	22	21	20,5	20	19	17,5	16,5	13,5	10	6,5
MXV(L) 100-9001	14,3	7,5	10		30,5	27,5	26	25,5	24	23,5	22	20	17	13,5
MXV(L) 100-9002-2R	21,5	11	15		44,5	43	42	41	38,5	36,5	34	28,5	21,5	15
MXV(L) 100-9002	27,3	15	20		62	55,5	53	51,5	49	47,5	45	41	35	28,5
MXV(L) 100-9003-2R/A	34	18,5	25		75,5	70,5	68	66,5	62,5	59,5	56	48,5	38,5	28,5
MXV(L) 100-9003	41	22	30		93,5	84	80,5	78	74	72	69	62,5	53,5	44
MXV(L) 100-9004-2R	54	30	40		108	100	97	94,5	89	85,5	81	71,5	59	46
MXV(L) 100-9004	54	30	40		125	112	108	105	99,5	96,5	92,5	84	72	60
MXV(L) 100-9005-2R	64	37	50		139	127	123	120	113	109	103	92	76	60
MXV(L) 100-9005	64	37	50		156	140	134	130	123	120	114	104	89	74
MXV(L) 100-9006-2R	77	45	60		170	156	150	146	138	134	127	113	94,5	75,5
MXV(L) 100-9006	77	45	60		188	169	161	157	149	144	138	126	108	89,5

CALPEDA ROMANIA - INFINITY PUMPS SRL
Tel: 0268.33.47.47 / 0722.244.944
vanzari@calpeda.ro | www.calpeda.ro

MXV 25-2 32-4 40-8 Vertical Multi-Stage In-Line Pumps

Dimensions and weights

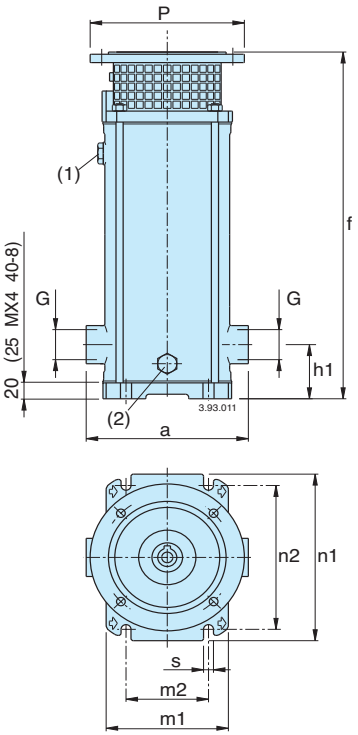

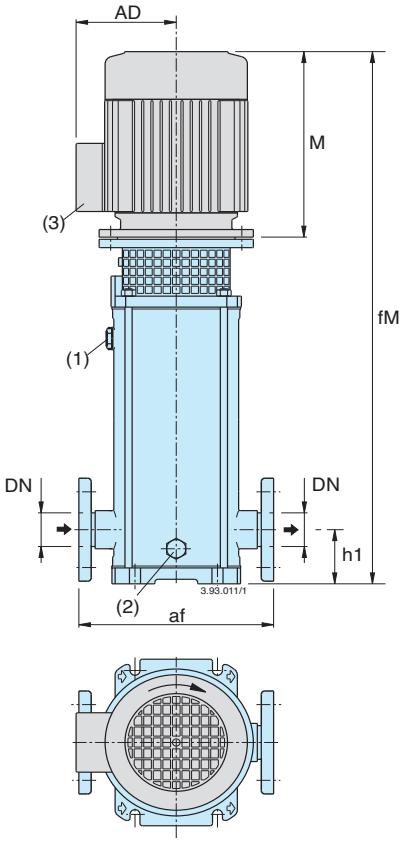

Counterflanges in stainless steel

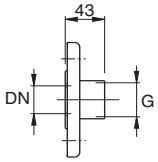

DN	G ISO 228
25	1
32	1 1/4
40	1 1/2

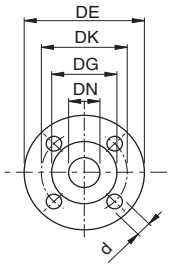

Flanges EN 1092-1 PN 25 - 40

DN	DE	DK	DG	Holes N.	Holes Ø
25	115	85	65	4	14
32	140	100	76	4	19
40	150	110	84	4	19

(1) Filling
(2) Draining
(3) Standard position of terminal box.
(for other positions rotate motor through 90° or 180°)

Pump	Motor kW	Motor HP	Motor	MXV (G) threaded ports G ISO 228	MXV (G) threaded ports a	MXV (F) flanged ports DN	MXV (F) flanged ports af	mm h1	mm f	mm (5) M	mm fM	mm P	mm (5) AD	mm n1	mm n2	mm m1	mm m2	mm s	without motor MXV (G) (4) kg (6)	with motor (5) kg (6)
MXV 25-204/C	0,75	1	M80 V1	G1	215	25	250	75	372	255	627	200	127,5	210	180	150	100	12,5	18	30,2
MXV 25-205/C	0,75	1	M80 V1	G1	215	25	250	75	396	255	651	200	127,5	210	180	150	100	12,5	19	31,2
MXV 25-206/D	1,1	1,5	M80 V1	G1	215	25	250	75	420	255	675	200	127,5	210	180	150	100	12,5	20	33,3
MXV 25-207/D	1,1	1,5	M80 V1	G1	215	25	250	75	444	255	699	200	127,5	210	180	150	100	12,5	21	34,3
MXV 25-208/D	1,5	2	M90 V1	G1	215	25	250	75	478	255	733	200	127,5	210	180	150	100	12,5	22	37,2
MXV 25-210/D	1,5	2	M90 V1	G1	215	25	250	75	526	255	781	200	127,5	210	180	150	100	12,5	23	38,2
MXV 25-212/D	2,2	3	M90 V1	G1	215	25	250	75	574	295	869	200	127,5	210	180	150	100	12,5	25	43,1
MXV 25-214/D	2,2	3	M90 V1	G1	215	25	250	75	622	295	917	200	127,5	210	180	150	100	12,5	26	44,1
MXV 25-216/C	3	4	M100 V1	G1	215	25	250	75	680	311	991	250	137,5	210	180	150	100	12,5	29	54,6
MXV 25-218/C	3	4	M100 V1	G1	215	25	250	75	728	311	1039	250	137,5	210	180	150	100	12,5	31	56,6
MXV 25-220/C	3	4	M100 V1	G1	215	25	250	75	776	311	1087	250	137,5	210	180	150	100	12,5	32	57,6
MXV 32-404/D	1,1	1,5	M80 V1	G 1 1/4	215	32	250	75	372	255	627	200	127,5	210	180	150	100	12,5	19	31,2
MXV 32-405/D	1,1	1,5	M80 V1	G 1 1/4	215	32	250	75	396	255	651	200	127,5	210	180	150	100	12,5	20	32,2
MXV 32-406/D	1,5	2	M90 V1	G 1 1/4	215	32	250	75	430	255	685	200	127,5	210	180	150	100	12,5	21	36,2
MXV 32-407/D	1,5	2	M90 V1	G 1 1/4	215	32	250	75	454	255	709	200	127,5	210	180	150	100	12,5	22	37,2
MXV 32-408/D	2,2	3	M90 V1	G 1 1/4	215	32	250	75	478	295	773	200	127,5	210	180	150	100	12,5	23	41,1
MXV 32-410/D	2,2	3	M90 V1	G 1 1/4	215	32	250	75	526	295	821	200	127,5	210	180	150	100	12,5	24	42,1
MXV 32-412/C	3	4	M100 V1	G 1 1/4	215	32	250	75	584	311	895	250	137,5	210	180	150	100	12,5	27	52,6
MXV 32-414/C	3	4	M100 V1	G 1 1/4	215	32	250	75	632	311	943	250	137,5	210	180	150	100	12,5	29	54,6
MXV 32-416/D	4	5,5	M112 V1	G 1 1/4	215	32	250	75	680	311	991	250	137,5	210	180	150	100	12,5	30	57,8
MXV 32-418/D	4	5,5	M112 V1	G 1 1/4	215	32	250	75	728	311	1039	250	137,5	210	180	150	100	12,5	31	58,8
MXV 40-804/D	1,5	2	M90 V1	G 1 1/2	225	40	280	80	411	255	666	200	127,5	246	215	190	130	14	21	36,2
MXV 40-805/D	2,2	3	M90 V1	G 1 1/2	225	40	280	80	441	295	736	200	127,5	246	215	190	130	14	22	40,1
MXV 40-806/D	2,2	3	M90 V1	G 1 1/2	225	40	280	80	471	295	766	200	127,5	246	215	190	130	14	23	41,1
MXV 40-807/C	3	4	M100 V1	G 1 1/2	225	40	280	80	511	311	822	250	137,5	246	215	190	130	14	25	50,6
MXV 40-808/C	3	4	M100 V1	G 1 1/2	225	40	280	80	541	311	852	250	137,5	246	215	190	130	14	26	51,6
MXV 40-810/D	4	5,5	M112 V1	G 1 1/2	225	40	280	80	601	311	912	250	137,5	246	215	190	130	14	28	55,8
MXV 40-811/D	4	5,5	M112 V1	G 1 1/2	225	40	280	80	631	311	942	250	137,5	246	215	190	130	14	29	56,8
MXV 40-813/C	5,5	7,5	M132 V1	G 1 1/2	225	40	280	80	711	339	1050	300	159,5	246	215	190	130	14	35	77,3
MXV 40-815/C	5,5	7,5	M132 V1	G 1 1/2	225	40	280	80	771	339	1110	300	159,5	246	215	190	130	14	36	78,3
MXV 40-817/C	7,5	10	M132 V1	G 1 1/2	225	40	280	80	831	339	1170	300	159,5	246	215	190	130	14	38	85,7
MXV 40-819/C	7,5	10	M132 V1	G 1 1/2	225	40	280	80	891	339	1230	300	159,5	246	215	190	130	14	39	86,7

(4) MXV (F) = MXV (G) + 1kg (5) With standard motor (6) Net weight

CALPEDA ROMANIA - INFINITY PUMPS SRL
Tel: 0268.33.47.47 / 0722.244.944
vanzari@calpeda.ro | www.calpeda.ro

MXV 50-15 50-20 Vertical Multi-Stage In-Line Pumps

Dimensions and weights

Flanges EN 1092-2 PN 25

DN	DE	DK	DG	Holes N.	Holes Ø
50	165	125	99	4	19

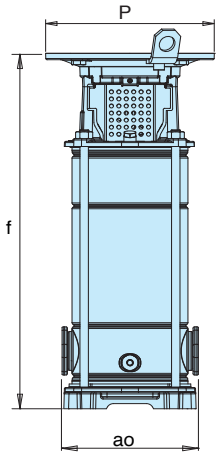

Oval Counterflanges

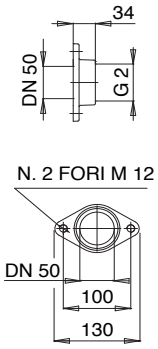

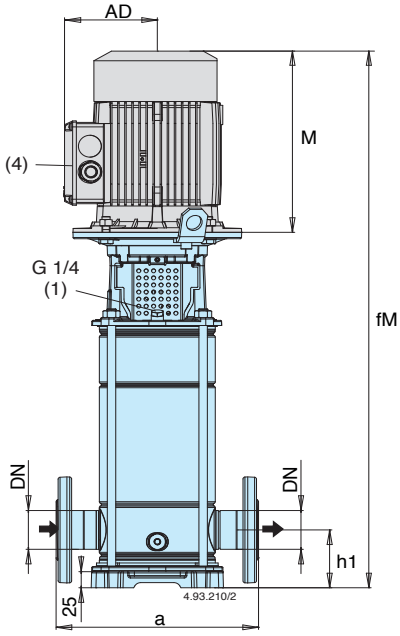

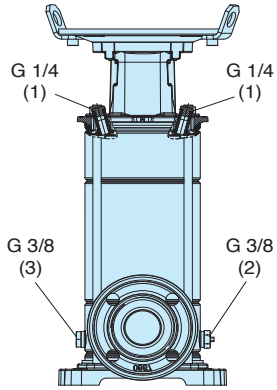

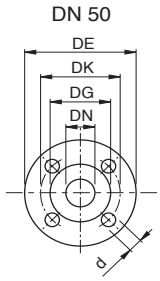

(1) Filling and air vent
(2) Air vent suction side
(3) Draining
(4) Standard position of terminal box.
(for other positions rotate motor through 90° or 180°)
(5) MXV (L) : + 3 kg - MXV (H) : + 3 kg
(6) With standard motor
(7) Net weight
(8) Oval flanges MXV (O)

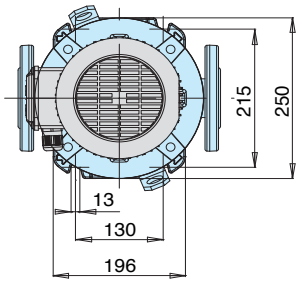

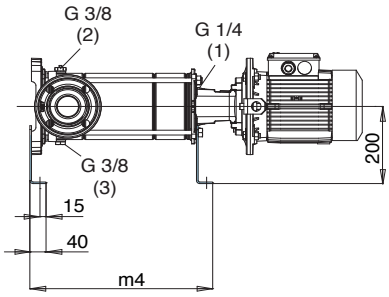

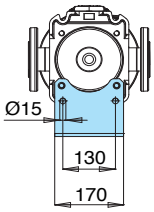

Pump	Motor kW	Motor HP	Motor	mm DN	a	(8) ao	h1	f	(6) M	fM	P	(6) AD	m4	without motor MXV (5) kg (7)	(8)	with motor (6) kg (7)	(8)
MXV 50-1501	1,1	1,5	M80 V1	50	300	200	90	438	255	693	200	127,5	349	27,4	24,6	40,7	37,9
MXV 50-1502	1,5	2	M90 V1	50	300	200	90	438	295	733	200	127,5	349	27,9	25,1	43,1	40,3
MXV 50-1503	2,2	3	M90 V1	50	300	200	90	486	295	781	200	127,5	397	29,4	26,6	47,5	44,7
MXV 50-1504	3	4	M112 V1	50	300	200	90	534	311	845	250	137,5	445	31,8	29,0	57,4	54,6
MXV 50-1505	4	5,5	M112 V1	50	300	200	90	582	311	893	250	137,5	493	33,3	30,5	61,1	58,3
MXV 50-1506	5,5	7,5	M132 V1	50	300	200	90	693	339	1032	300	159,5	541	44,3	41,5	86,6	83,8
MXV 50-1507	5,5	7,5	M132 V1	50	300	200	90	741	339	1080	300	159,5	589	45,7	42,9	88,0	85,2
MXV 50-1508	7,5	10	M132 V1	50	300	200	90	789	339	1128	300	159,5	637	47,2	44,4	94,9	92,1
MXV 50-1509	7,5	10	M132 V1	50	300	200	90	837	339	1176	300	159,5	685	48,6	45,8	96,3	93,5
MXV 50-1510	7,5	10	M132 V1	50	300	200	90	885	339	1224	300	159,5	733	50,1	47,3	97,8	95,0
MXV 50-1511	9,2	12,5	M160 V1	50	300		90	963	413	1376	350	186	781	57,8		115,8	
MXV 50-1512	9,2	12,5	M160 V1	50	300		90	1011	413	1424	350	186	829	59,3		117,3	
MXV 50-1513	11	15	M160 V1	50	300		90	1059	459	1518	350	186	877	60,7		136,7	
MXV 50-1514	11	15	M160 V1	50	300		90	1107	459	1566	350	186	925	62,2		138,2	
MXV 50-1515	11	15	M160 V1	50	300		90	1155	459	1614	350	186	973	63,7		139,7	
MXV 50-1516	15	20	M160 V1	50	300		90	1203	484	1687	350	186	1021	65,1		167,1	
MXV 50-1517	15	20	M160 V1	50	300		90	1251	484	1735	350	186	1069	66,6		168,6	
MXV 50-2001	1,1	1,5	M80 V1	50	300	200	90	438	255	693	200	127,5	349	27,4	24,6	40,7	37,9
MXV 50-2002	2,2	3	M90 V1	50	300	200	90	438	295	733	200	127,5	349	27,9	25,1	46,0	43,2
MXV 50-2003	3	4	M100 V1	50	300	200	90	486	311	797	250	137,5	397	30,3	27,6	55,9	53,2
MXV 50-2004	4	5,5	M112 V1	50	300	200	90	521	311	832	250	137,5	445	31,8	29,0	59,6	56,8
MXV 50-2005	5,5	7,5	M132 V1	50	300	200	90	645	339	984	300	159,5	493	42,8	40,0	85,1	82,3
MXV 50-2006	7,5	10	M132 V1	50	300	200	90	693	339	1032	300	159,5	541	44,3	41,5	92,0	89,2
MXV 50-2007	7,5	10	M132 V1	50	300	200	90	741	339	1080	300	159,5	589	45,7	42,9	93,4	90,6
MXV 50-2008	9,2	12,5	M160 V1	50	300	200	90	819	413	1232	350	186	637	53,5	50,7	111,5	
MXV 50-2009	9,2	12,5	M160 V1	50	300	200	90	867	413	1280	350	186	685	54,9	52,1	112,9	
MXV 50-2010	11	15	M160 V1	50	300	200	90	915	459	1374	350	186	733	56,4	53,6	132,4	129,6
MXV 50-2011	11	15	M160 V1	50	300		90	963	459	1422	350	186	781	57,8		133,8	
MXV 50-2012	15	20	M160 V1	50	300		90	1011	484	1495	350	186	829	59,3		161,3	
MXV 50-2013	15	20	M160 V1	50	300		90	1059	484	1543	350	186	877	60,7		162,7	
MXV 50-2014	15	20	M160 V1	50	300		90	1107	484	1591	350	186	925	62,2		164,2	
MXV 50-2015	15	20	M160 V1	50	300		90	1155	484	1639	350	186	973	63,7		165,7	
MXV 50-2016	18,5	25	M160 V1	50	300		90	1203	538	1741	350	206	1021	65,1		-	
MXV 50-2017	18,5	25	M160 V1	50	300		90	1251	538	1789	350	206	1069	66,6		-	

CALPEDA ROMANIA - INFINITY PUMPS SRL
Tel: 0268.33.47.47 / 0722.244.944
vanzari@calpeda.ro | www.calpeda.ro

MXV 65-32 80-48 Vertical Multi-Stage In-Line Pumps

Dimensions and weights

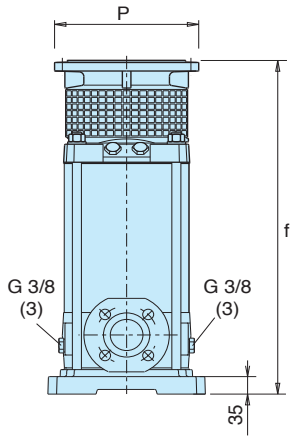

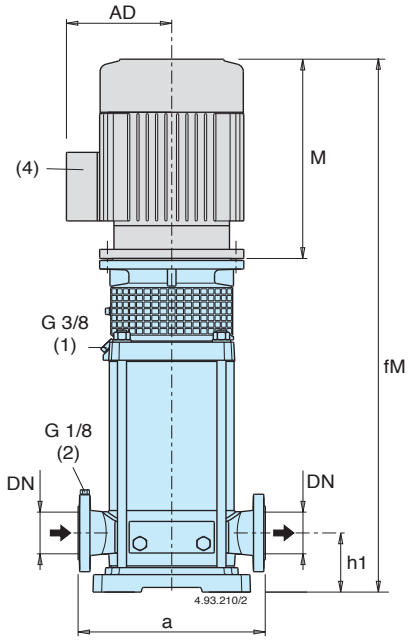

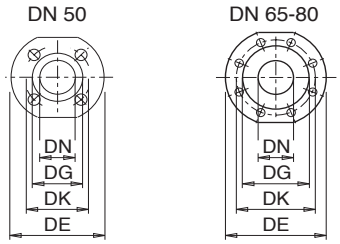

Flanges EN 1092-2 PN 25 - 40

DN	DE	DK	DG	Holes N.	Holes Ø
65	185	145	118	8	19
80	200	160	132	8	19

(1) Filling and air vent
(2) Air vent suction side
(3) Draining

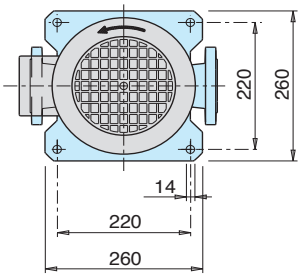

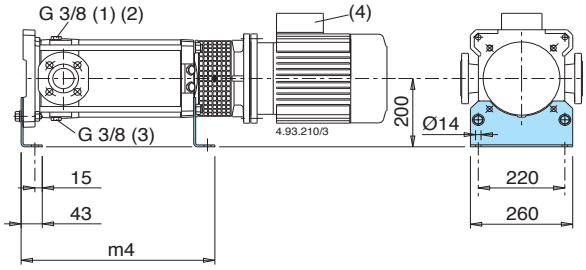

Pump	Motor kW	Motor HP	Motor	mm DN	a	h1	f	(6) M	fM	P	(6) AD	m4	without motor MXV (5) kg (7)	with motor (6) kg (7)
MXV 65-3202/D	4	5,5	M112 V1	65	320	105	407	311	718	250	137,5	334	45	72,8
MXV 65-3203/C	5,5	7,5	M132 V1	65	320	105	473	339	812	300	159,5	380	51	93,3
MXV 65-3204/C	7,5	10	M132 V1	65	320	105	519	339	858	300	159,5	426	53	100,7
MXV 65-3205/D	11	15	M160 V1	65	320	105	595	459	1054	350	186	472	62	138
MXV 65-3206/D	11	15	M160 V1	65	320	105	641	459	1100	350	186	518	64	140
MXV 65-3207/D	15	20	M160 V1	65	320	105	687	484	1171	350	186	564	66	168
MXV 65-3208/D	15	20	M160 V1	65	320	105	733	484	1217	350	186	610	68	170
MXV 65-3209/E	18,5	25	M160 V1	65	320	105	779	538	1290	350	206	656	70	-
MXV 65-3210/E	18,5	25	M160 V1	65	320	105	825	538	1363	350	206	702	72	-
MXV 65-3212/D	22	30	M180 V1	65	320	105	917	538	1455	350	206	794	75	204
MXV 80-4801/D	4	5,5	M112 V1	80	320	105	411	311	722	250	137,5	338	45	72,8
MXV 80-4802/C	5,5	7,5	M132 V1	80	320	105	466	339	805	300	159,5	373	51	93,3
MXV 80-4803/C	7,5	10	M132 V1	80	320	105	527	339	866	300	159,5	434	54	101,7
MXV 80-4804/D	11	15	M160 V1	80	320	105	618	459	1077	350	186	495	64	140
MXV 80-4805/D	15	20	M160 V1	80	320	105	680	484	1164	350	186	557	66	168
MXV 80-4806/D	15	20	M160 V1	80	320	105	741	484	1225	350	186	618	69	171
MXV 80-4807/E	18,5	25	M160 V1	80	320	105	802	538	1363	350	206	679	72	-
MXV 80-4808/D	22	30	M180 V1	80	320	105	864	538	1402	350	206	741	74	203

(4) Standard position of terminal box. (for other positions rotate motor through 90° or 180°) (5) MXV (L) : + 3 kg MXV (H) : + 3 kg (6) With standard motor (7) Net weight

CALPEDA ROMANIA - INFINITY PUMPS SRL
Tel: 0268.33.47.47 / 0722.244.944
vanzari@calpeda.ro | www.calpeda.ro

MXV 100-65 100-90 Vertical Multi-Stage In-Line Pumps

Dimensions and weights

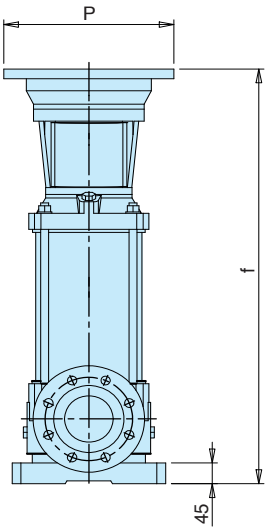

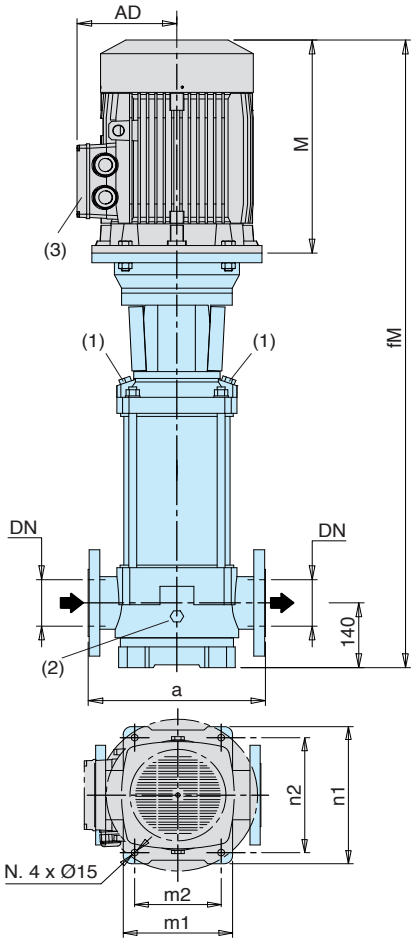

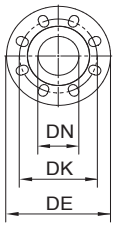

Flanges EN 1092-2

DN	PN	DE	DK	Holes N.	Holes Ø
100	16	230	180	8	19
100	25	255	190	8	23

(1) Filling and air vent
(2) Draining

Pump	Motor				mm										without motor	with motor
	kW	HP	PN	Size	a	f	n1	n2	m1	m2	(4) M	fm	P	AD	MXV kg (5)	(4) kg (5)
MXV 100-6501	5,5	7,5	16	M132 V1	365	737	316	265	240	190	339	1076	300	159,5	81	123,3
MXV 100-6502-2R	7,5	10	16	M132 V1	365	829	316	265	240	190	339	1168	300	159,5	85,5	127,8
MXV 100-6502	11	15	16	M160 V1	365	849	316	265	240	190	459	1308	350	186	88,5	164,5
MXV 100-6503-2R	15	20	16	M160 V1	365	941	316	265	240	190	484	1425	350	186	93	195
MXV 100-6503/A	18,5	25	16	M160 V1	365	941	316	265	240	190	538	1479	350	206	93	-
MXV 100-6504-2R/A	18,5	25	16	M160 V1	365	1033	316	265	240	190	538	1571	350	206	97,5	-
MXV 100-6504	22	30	16	M180 V1	365	1033	316	265	240	190	538	1571	350	206	98	227
MXV 100-6505-2R	30	40	16	M200 V1	365	1131	316	265	240	190	611	1742	400	315	105,5	330,5
MXV 100-6505	30	40	16	M200 V1	365	1131	316	265	240	190	611	1742	400	315	105,5	330,5
MXV 100-6506-2R	30	40	16	M200 V1	365	1223	316	265	240	190	611	1834	400	315	110	335
MXV 100-6506	37	50	25	M200 V1	365	1223	316	265	240	190	611	1834	400	315	110	360
MXV 100-6507-2R	37	50	25	M200 V1	365	1315	316	265	240	190	611	1926	400	315	114,5	364,5
MXV 100-6507	45	60	25	M225 V1	365	1315	316	265	240	190	708	2023	450	338	117,5	432,5
MXV 100-6508-2R	45	60	25	M225 V1	365	1407	316	265	240	190	708	2115	450	338	122	437
MXV 100-6508	45	60	25	M225 V1	365	1407	316	265	240	190	708	2115	450	338	122	437
MXV 100-9001-1R	5,5	7,5	16	M132 V1	380	737	341	280	260	199	339	1076	300	159,5	82,5	124,8
MXV 100-9001	7,5	10	16	M132 V1	380	737	341	280	260	199	339	1076	300	159,5	82,5	124,8
MXV 100-9002-2R	11	15	16	M160 V1	380	849	341	280	260	199	459	1308	350	186	89	165
MXV 100-9002	15	20	16	M160 V1	380	849	341	280	260	199	484	1333	350	186	89	191
MXV 100-9003-2R/A	18,5	25	16	M160 V1	380	941	341	280	260	199	538	1479	350	206	93	-
MXV 100-9003	22	30	16	M180 V1	380	941	341	280	260	199	538	1479	350	206	93	222
MXV 100-9004-2R	30	40	16	M200 V1	380	1038	341	280	260	199	611	1649	400	315	100	325
MXV 100-9004	30	40	16	M200 V1	380	1038	341	280	260	199	611	1649	400	315	100	325
MXV 100-9005-2R	37	50	16	M200 V1	380	1131	341	280	260	199	611	1742	400	315	104	354
MXV 100-9005	37	50	16	M200 V1	380	1131	341	280	260	199	611	1742	400	315	104	354
MXV 100-9006-2R	45	60	25	M225 V1	380	1223	341	280	260	199	708	1931	450	338	110,5	425,5
MXV 100-9006	45	60	25	M225 V1	380	1223	341	280	260	199	708	1931	450	338	110,5	425,5

(3) Standard position of terminal box. (for other positions rotate motor through 90° or 180°) (4) With standard motor (5) Net weight

CALPEDA ROMANIA - INFINITY PUMPS SRL
Tel: 0268.33.47.47 / 0722.244.944
vanzari@calpeda.ro | www.calpeda.ro

MXV EI 25-2 32-4 40-8

Vertical Multi-Stage In-Line Pumps

Dimensions and weights

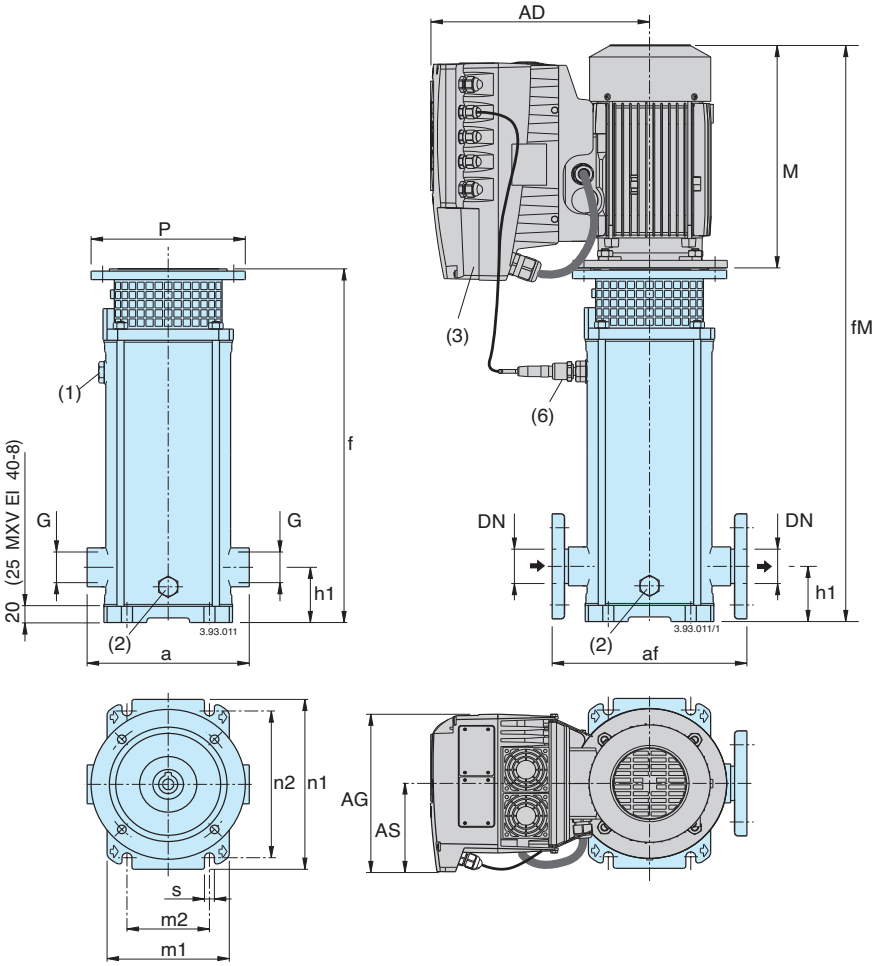

Counterflanges in stainless steel

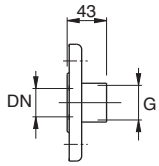

DN	G ISO 228
25	1
32	1 1/4
40	1 1/2

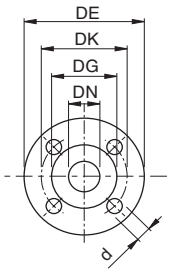

Flanges in accordance
EN 1092-2 PN 25 - 40

DN	DE	DK	DG	Holes N.	Holes Ø
25	115	85	65	4	14
32	140	100	76	4	19
40	150	110	84	4	19

(1) Filling
(2) Draining
(3) Standard position of I-MAT
(for other positions rotate motor through 90° or 180°)
(4) MXV EI (F) = MXV EI (G) + 1kg
(5) Net weight
(6) Pressure transducer

Pump	Motor			MXV EI (G) threaded ports		MXV EI (F) flanged ports		mm													MXV EI (G) (4)
	kW	HP		G ISO 228	a	DN	af	h1	f	M	fM	P	AD	AG	AS	n1	n2	m1	m2	s	kg (5)
MXV EI 25-204/C	0,75	1	M80 V1	G1	215	25	250	75	372	255	627	200	286	190	105	210	180	150	100	12,5	36,6
MXV EI 25-205/C	0,75	1	M80 V1	G1	215	25	250	75	396	255	651	200	286	190	105	210	180	150	100	12,5	37,6
MXV EI 25-206/D	1,1	1,5	M80 V1	G1	215	25	250	75	420	255	675	200	286	190	105	210	180	150	100	12,5	39,7
MXV EI 25-207/D	1,1	1,5	M80 V1	G1	215	25	250	75	444	255	699	200	286	190	105	210	180	150	100	12,5	40,7
MXV EI 25-208/D	1,5	2	M90 V1	G1	215	25	250	75	478	255	733	200	286	190	105	210	180	150	100	12,5	43,8
MXV EI 25-210/D	1,5	2	M90 V1	G1	215	25	250	75	526	255	781	200	286	190	105	210	180	150	100	12,5	44,8
MXV EI 25-212/D	2,2	3	M90 V1	G1	215	25	250	75	574	295	869	200	286	210	118	210	180	150	100	12,5	50,6
MXV EI 25-214/D	2,2	3	M90 V1	G1	215	25	250	75	622	295	917	200	286	210	118	210	180	150	100	12,5	51,6
MXV EI 25-216/C	3	4	M100 V1	G1	215	25	250	75	680	311	991	250	294	210	118	210	180	150	100	12,5	62,1
MXV EI 25-218/C	3	4	M100 V1	G1	215	25	250	75	728	311	1039	250	294	210	118	210	180	150	100	12,5	64,1
MXV EI 25-220/C	3	4	M100 V1	G1	215	25	250	75	776	311	1087	250	294	210	118	210	180	150	100	12,5	65,1
MXV EI 32-404/D	1,1	1,5	M80 V1	G 1 1/4	215	32	250	75	372	255	627	200	286	190	105	210	180	150	100	12,5	37,6
MXV EI 32-405/D	1,1	1,5	M80 V1	G 1 1/4	215	32	250	75	396	255	651	200	286	190	105	210	180	150	100	12,5	38,6
MXV EI 32-406/D	1,5	2	M90 V1	G 1 1/4	215	32	250	75	430	255	685	200	286	190	105	210	180	150	100	12,5	42,8
MXV EI 32-407/D	1,5	2	M90 V1	G 1 1/4	215	32	250	75	454	255	709	200	286	190	105	210	180	150	100	12,5	43,8
MXV EI 32-408/D	2,2	3	M90 V1	G 1 1/4	215	32	250	75	478	295	773	200	286	210	118	210	180	150	100	12,5	48,6
MXV EI 32-410/D	2,2	3	M90 V1	G 1 1/4	215	32	250	75	526	295	821	200	286	210	118	210	180	150	100	12,5	49,6
MXV EI 32-412/C	3	4	M100 V1	G 1 1/4	215	32	250	75	584	311	895	250	294	210	118	210	180	150	100	12,5	60,1
MXV EI 32-414/C	3	4	M100 V1	G 1 1/4	215	32	250	75	632	311	943	250	294	210	118	210	180	150	100	12,5	62,1
MXV EI 32-416/D	4	5,5	M112 V1	G 1 1/4	215	32	250	75	680	311	991	250	294	210	118	210	180	150	100	12,5	65,8
MXV EI 32-418/D	4	5,5	M112 V1	G 1 1/4	215	32	250	75	728	311	1039	250	294	210	118	210	180	150	100	12,5	66,8
MXV EI 40-804/D	1,5	2	M90 V1	G 1 1/2	225	40	280	80	411	255	666	200	286	190	105	246	215	190	130	14	42,8
MXV EI 40-805/D	2,2	3	M90 V1	G 1 1/2	225	40	280	80	441	295	736	200	286	210	118	246	215	190	130	14	47,6
MXV EI 40-806/D	2,2	3	M90 V1	G 1 1/2	225	40	280	80	471	295	766	200	286	210	118	246	215	190	130	14	48,6
MXV EI 40-807/C	3	4	M100 V1	G 1 1/2	225	40	280	80	511	311	822	250	294	210	118	246	215	190	130	14	58,6
MXV EI 40-808/C	3	4	M100 V1	G 1 1/2	225	40	280	80	541	311	852	250	294	210	118	246	215	190	130	14	59,6
MXV EI 40-810/D	4	5,5	M112 V1	G 1 1/2	225	40	280	80	601	311	912	250	294	210	118	246	215	190	130	14	63,8
MXV EI 40-811/D	4	5,5	M112 V1	G 1 1/2	225	40	280	80	631	311	942	250	294	210	118	246	215	190	130	14	64,8
MXV EI 40-813/C	5,5	7,5	M132 V1	G 1 1/2	225	40	280	80	711	339	1050	300	321	210	118	246	215	190	130	14	85,3
MXV EI 40-815/C	5,5	7,5	M132 V1	G 1 1/2	225	40	280	80	771	339	1110	300	321	210	118	246	215	190	130	14	86,3
MXV EI 40-817/C	7,5	10	M132 V1	G 1 1/2	225	40	280	80	831	339	1170	300	368	281	153	246	215	190	130	14	100,5
MXV EI 40-819/C	7,5	10	M132 V1	G 1 1/2	225	40	280	80	891	339	1230	300	368	281	153	246	215	190	130	14	101,5

CALPEDA ROMANIA - INFINITY PUMPS SRL
Tel: 0268.33.47.47 / 0722.244.944
vanzari@calpeda.ro | www.calpeda.ro

MXV EI 50-15 50-20

Vertical Multi-Stage In-Line Pumps

Dimensions and weights

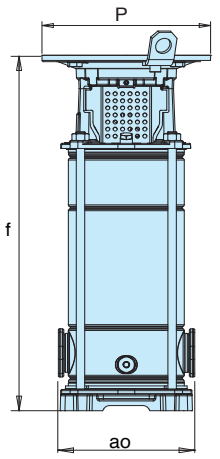

Oval Counterflanges

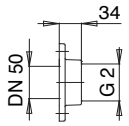

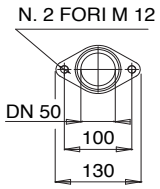

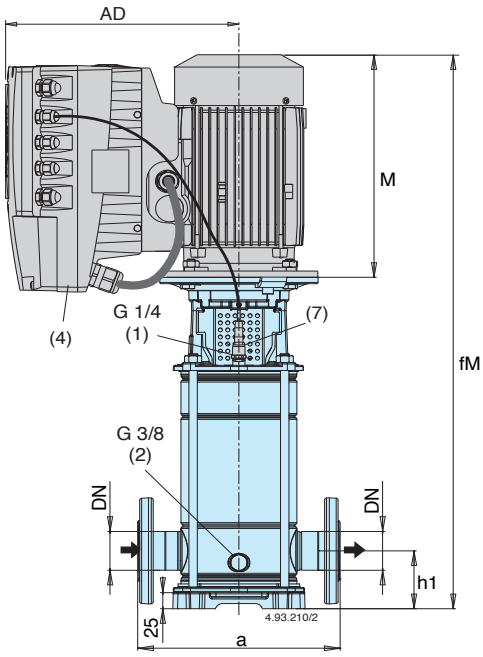

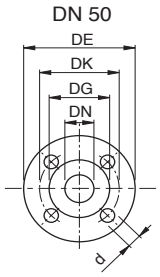

Flanges EN 1092-2 PN 25

DN	DE	DK	DG	Holes N.	Holes Ø
50	165	125	99	4	19

(1) Filling and air vent
(2) Air vent suction side
(3) Draining
(5) MXV EI (L) : + 3 kg
MXV EI (H) : + 3 kg
(6) Net weight
(7) Pressure transducer
(8) Oval flanges MXV (O)

(4) Standard position of I-MAT.
(for other positions rotate motor through 90° or 180°)

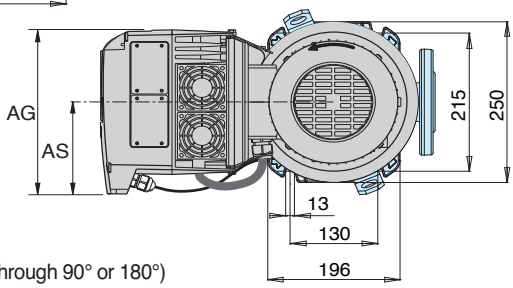

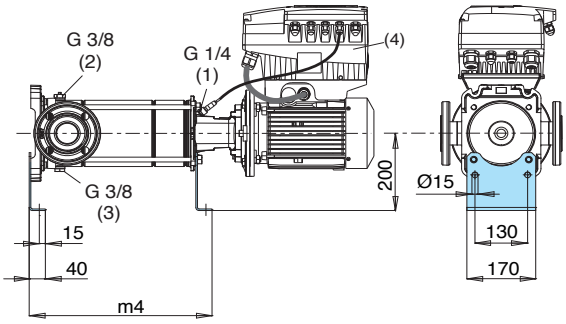

Pump	Motor kW	Motor HP	Motor	mm DN	a	(8) ao	h1	f	M	fM	P	AD	AG	AS	m4	(5) kg (6)	(8)
MXV EI 50-1501	1,1	1,5	M80 V1	50	300	200	90	438	255	693	200	286	190	105	349	47,1	44,3
MXV EI 50-1502	1,5	2	M90 V1	50	300	200	90	438	295	733	200	286	190	105	349	49,7	46,9
MXV EI 50-1503	2,2	3	M90 V1	50	300	200	90	486	295	781	200	286	210	118	397	54,5	51,7
MXV EI 50-1504	3	4	M112 V1	50	300	200	90	534	311	845	250	294	210	118	445	64,9	62,1
MXV EI 50-1505	4	5,5	M112 V1	50	300	200	90	582	311	893	250	294	210	118	493	69,1	66,3
MXV EI 50-1506	5,5	7,5	M132 V1	50	300	200	90	693	339	1032	300	321	210	118	541	94,6	91,8
MXV EI 50-1507	5,5	7,5	M132 V1	50	300	200	90	741	339	1080	300	321	210	118	589	96,0	93,2
MXV EI 50-1508	7,5	10	M132 V1	50	300	200	90	789	339	1128	300	368	281	153	637	109,7	106,9
MXV EI 50-1509	7,5	10	M132 V1	50	300	200	90	837	339	1176	300	368	281	153	685	111,1	108,3
MXV EI 50-1510	7,5	10	M132 V1	50	300	200	90	885	339	1224	300	368	281	153	733	112,6	109,8
MXV EI 50-1511	9,2	12,5	M160 V1	50	300		90	963	413	1376	350	393	281	153	781	130,6	
MXV EI 50-1512	9,2	12,5	M160 V1	50	300		90	1011	413	1424	350	393	281	153	829	132,1	
MXV EI 50-1513	11	15	M160 V1	50	300		90	1059	459	1518	350	393	281	153	877	151,5	
MXV EI 50-1514	11	15	M160 V1	50	300		90	1107	459	1566	350	393	281	153	925	153,0	
MXV EI 50-1515	11	15	M160 V1	50	300		90	1155	459	1614	350	393	281	153	973	154,5	
MXV EI 50-1516	15	20	M160 V1	50	300		90	1203	484	1687	350	471	350	190	1021	202,1	
MXV EI 50-1517	15	20	M160 V1	50	300		90	1251	484	1735	350	471	350	190	1069	203,6	
MXV EI 50-2001	1,1	1,5	M80 V1	50	300	200	90	438	255	693	200	286	190	105	349	47,1	44,3
MXV EI 50-2002	2,2	3	M90 V1	50	300	200	90	438	295	733	200	286	210	118	349	53,0	50,2
MXV EI 50-2003	3	4	M100 V1	50	300	200	90	486	311	797	250	294	210	118	397	63,4	60,7
MXV EI 50-2004	4	5,5	M112 V1	50	300	200	90	521	311	832	250	294	210	118	445	67,6	64,8
MXV EI 50-2005	5,5	7,5	M132 V1	50	300	200	90	645	339	984	300	321	210	118	493	93,1	90,3
MXV EI 50-2006	7,5	10	M132 V1	50	300	200	90	693	339	1032	300	368	281	153	541	106,8	104,0
MXV EI 50-2007	7,5	10	M132 V1	50	300	200	90	741	339	1080	300	368	281	153	589	108,2	105,4
MXV EI 50-2008	9,2	12,5	M160 V1	50	300	200	90	819	413	1232	350	393	281	153	637	126,3	
MXV EI 50-2009	9,2	12,5	M160 V1	50	300	200	90	867	413	1280	350	393	281	153	685	127,7	
MXV EI 50-2010	11	15	M160 V1	50	300	200	90	915	459	1374	350	393	281	153	733	147,2	144,4
MXV EI 50-2011	11	15	M160 V1	50	300		90	963	459	1422	350	393	281	153	781	148,6	
MXV EI 50-2012	15	20	M160 V1	50	300		90	1011	484	1495	350	471	350	190	829	196,3	
MXV EI 50-2013	15	20	M160 V1	50	300		90	1059	484	1543	350	471	350	190	877	197,7	
MXV EI 50-2014	15	20	M160 V1	50	300		90	1107	484	1591	350	471	350	190	925	199,2	
MXV EI 50-2015	15	20	M160 V1	50	300		90	1155	484	1639	350	471	350	190	973	200,7	
MXV EI 50-2016	18,5	25	M160 V1	50	300		90	1203	538	1741	350	491	350	190	1021	207,1	
MXV EI 50-2017	18,5	25	M160 V1	50	300		90	1251	538	1789	350	491	350	190	1069	208,6	

CALPEDA ROMANIA - INFINITY PUMPS SRL
Tel: 0268.33.47.47 / 0722.244.944
vanzari@calpeda.ro | www.calpeda.ro

MXV EI 65-32 80-48

Vertical Multi-Stage In-Line Pumps

Dimensions and weights

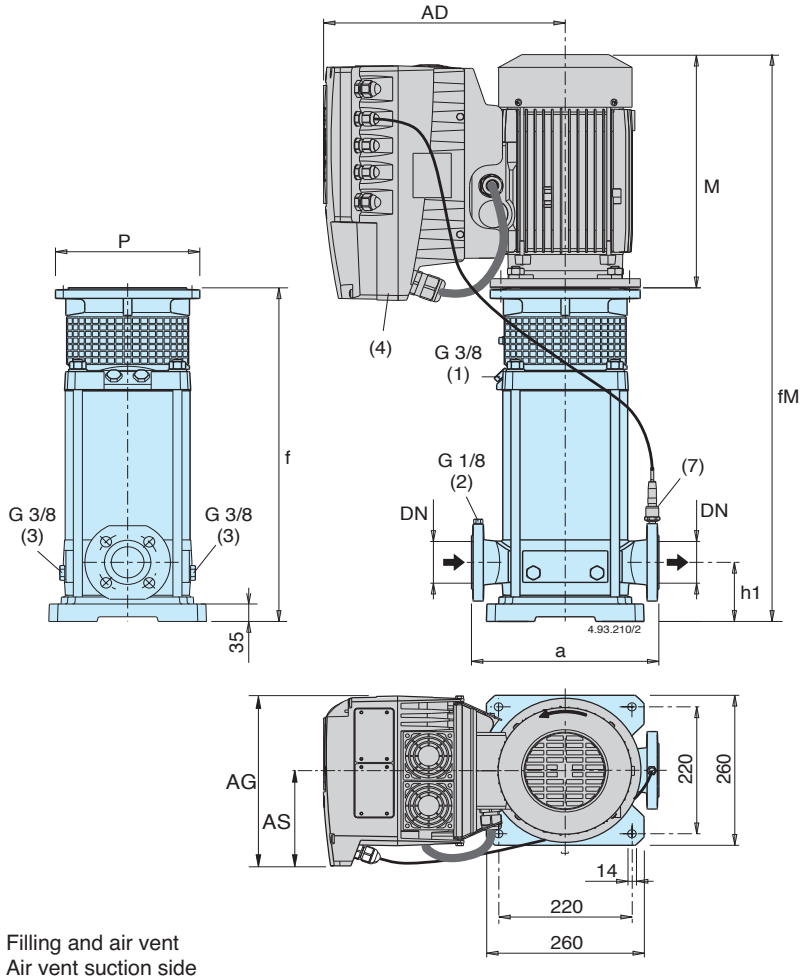

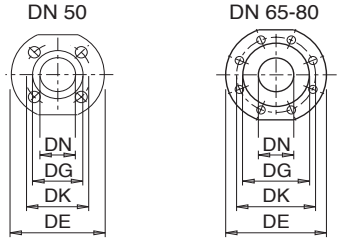

Flanges in accordance
EN 1092-2 PN 25 - 40

DN	DE	DK	DG	Holes N.	Holes Ø
65	185	145	118	8	19
80	200	160	132	8	19

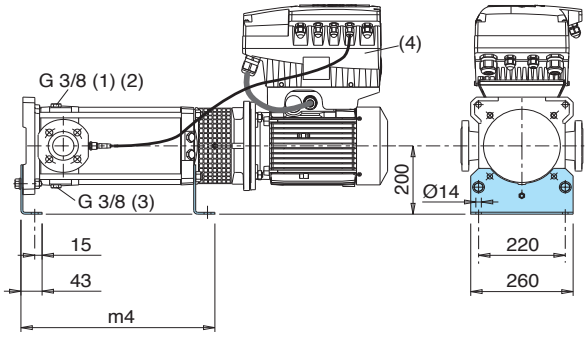

(1) Filling and air vent
(2) Air vent suction side
(3) Draining
(4) Standard position of I-MAT
(for other positions rotate motor through 90° or 180°)

(5) MXV (L) : + 3 kg, MXV (H) : + 3 kg
(6) Net weight (7) Pressure transducer

Pump	Motor			mm											MXV EI (5) kg (6)
	kW	HP		DN	a	h1	f	M	fM	P	AD	AG	AS	m4	
MXV EI 65-3202/D	4	5,5	M112 V1	65	320	105	407	311	718	250	294	210	118	334	80,8
MXV EI 65-3203/C	5,5	7,5	M132 V1	65	320	105	473	339	812	300	321	210	118	380	101,3
MXV EI 65-3204/C	7,5	10	M132 V1	65	320	105	519	339	858	300	368	281	153	426	115,5
MXV EI 65-3205/D	11	15	M160 V1	65	320	105	595	459	1054	350	393	281	153	472	152,8
MXV EI 65-3206/D	11	15	M160 V1	65	320	105	641	459	1100	350	393	281	153	518	154,8
MXV EI 65-3207/D	15	20	M160 V1	65	320	105	687	484	1171	350	471	350	190	564	203
MXV EI 65-3208/D	15	20	M160 V1	65	320	105	733	484	1217	350	471	350	190	610	205
MXV EI 65-3209/E	18,5	25	M160 V1	65	320	105	779	538	1290	350	491	350	190	656	-
MXV EI 65-3210/E	18,5	25	M160 V1	65	320	105	825	538	1363	350	491	350	190	702	-
MXV EI 65-3212/D	22	30	M180 V1	65	320	105	917	538	1455	350	491	350	190	794	239
MXV EI 80-4801/D	4	5,5	M112 V1	80	320	105	411	311	722	250	294	210	118	338	80,8
MXV EI 80-4802/C	5,5	7,5	M132 V1	80	320	105	466	339	805	300	321	210	118	373	101,3
MXV EI 80-4803/C	7,5	10	M132 V1	80	320	105	527	339	866	300	368	281	153	434	116,5
MXV EI 80-4804/D	11	15	M160 V1	80	320	105	618	459	1077	350	393	281	153	495	154,8
MXV EI 80-4805/D	15	20	M160 V1	80	320	105	680	484	1164	350	471	350	190	557	203
MXV EI 80-4806/D	15	20	M160 V1	80	320	105	741	484	1225	350	471	350	190	618	206
MXV EI 80-4807/E	18,5	25	M160 V1	80	320	105	802	538	1340	350	491	350	190	679	-
MXV EI 80-4808/D	22	30	M180 V1	80	320	105	864	538	1402	350	491	350	190	741	238

CALPEDA ROMANIA - INFINITY PUMPS SRL
Tel: 0268.33.47.47 / 0722.244.944
vanzari@calpeda.ro | www.calpeda.ro

MXV EI 100-65 100-90

Vertical Multi-Stage In-Line Pumps

Dimensions and weights

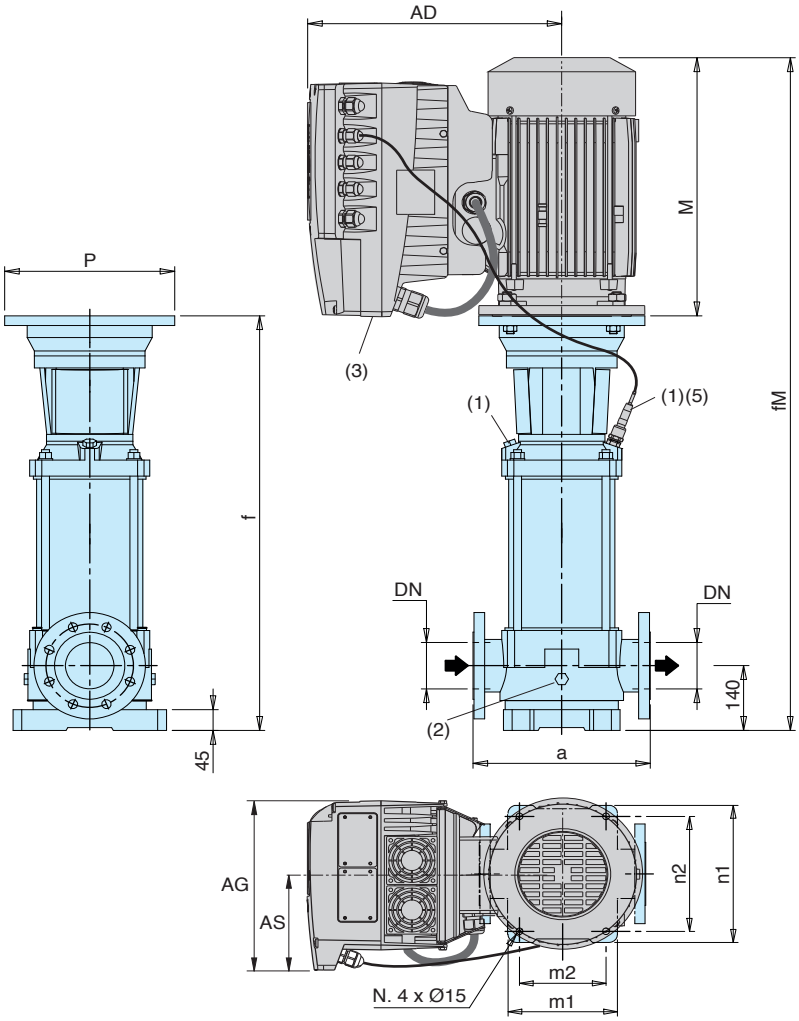

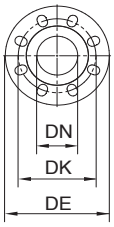

Flanges in accordance EN 1092-2

DN	PN	DE	DK	Holes N.	Holes Ø
100	16	230	180	8	19
100	25	225	190	8	23

(1) Filling and air vent
(2) Draining
(3) Standard position of I-MAT
(for other positions rotate motor through 90° or 180°)
(4) Net weight
(5) Pressure transducer

Pump	Motor				mm												MXV EI
	kW	HP	PN	Size	a	f	n1	n2	m1	m2	M	fm	P	AD	AG	AS	kg (4)
MXV EI 100-6501	5,5	7,5	16	M132 V1	365	737	316	265	240	190	339	1076	300	321	210	118	131,3
MXV EI 100-6502-2R	7,5	10	16	M132 V1	365	829	316	265	240	190	339	1168	300	368	281	153	142,6
MXV EI 100-6502	11	15	16	M160 V1	365	849	316	265	240	190	459	1308	350	393	281	153	179,3
MXV EI 100-6503-2R	15	20	16	M160 V1	365	941	316	265	240	190	484	1425	350	471	350	190	230
MXV EI 100-6503/A	18,5	25	16	M160 V1	365	941	316	265	240	190	538	1479	350	491	350	190	-
MXV EI 100-6504-2R/A	18,5	25	16	M160 V1	365	1033	316	265	240	190	538	1571	350	4-1	350	190	-
MXV EI 100-6504	22	30	16	M180 V1	365	1033	316	265	240	190	538	1571	350	491	350	190	262
MXV EI 100-9001-1R	5,5	7,5	16	M132 V1	380	737	341	280	260	199	339	1076	300	321	210	118	132,8
MXV EI 100-9001	7,5	10	16	M132 V1	380	737	341	280	260	199	339	1076	300	368	281	153	139,6
MXV EI 100-9002-2R	11	15	16	M160 V1	380	849	341	280	260	199	459	1308	350	393	281	153	179,8
MXV EI 100-9002	15	20	16	M160 V1	380	849	341	280	260	199	484	1333	350	471	350	190	226
MXV EI 100-9003-2R/A	18,5	25	16	M160 V1	380	941	341	280	260	199	538	1479	350	491	350	190	-
MXV EI 100-9003	22	30	16	M180 V1	380	941	341	280	260	199	538	1479	350	491	350	190	257

CALPEDA ROMANIA - INFINITY PUMPS SRL
Tel: 0268.33.47.47 / 0722.244.944
vanzari@calpeda.ro | www.calpeda.ro

MXV

Vertical Multi-Stage In-Line Pumps

Features

Long Service Life with Standard Motor

Pump with thrust bearing without additional axial loads on the motor bearings. Any standard motor V1 design (suitable to be lifted in vertical position) can be used, of our choice or of Client's choice.

Easy Assembly of the Motor

With the single-piece sleeve coupling the pump unit can be supplied fully assembled also without the motor. This eliminates the risk of damage caused by shifting of the pump shaft during transportation.
The motor is simply inserted in the coupling and fastened to the flange without the necessity for adapting the axial position of the pump shaft.

Removable mechanical Seal

Easy removal of the mechanical seal without dismantling the motor (for MXV 50-15, MXV 50-20 and MXV 100 with motors exceeding 4 KW).

MXV 50-15, MXV 50-20

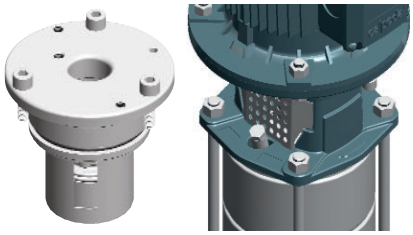

Extra Safety

Single-piece coupling guard to be removed only by means of a tool, positioned around the lantern bracket, thus avoiding accidental pushing and rubbing against the coupling.

Low Cost Installation

Vertical construction with reduced pump height for installation in small spaces.
In-line connections to simplify the piping layout with the possibility of inserting the pump in straight pipe-lines.
Disassembly, inspection or cleaning of internal parts without removal of piping.

Robust and Reliable

Single PN 25 construction for all pump sizes.
The suction and discharge nozzles arranged in-line absorb the forces of the piping on the pump without the creation of distorting loads causing local friction and early wears.
The lantern brackets compact and robust design maintains a sure alignment between rotating and fixed parts, reducing vibration.
The upper cover design prevents entrapment of air around the mechanical seal.

Low-Noise Operation

The water filled shroud around the stages and thick external walls, work together for low-noise operation.
Low-noise standard motor.

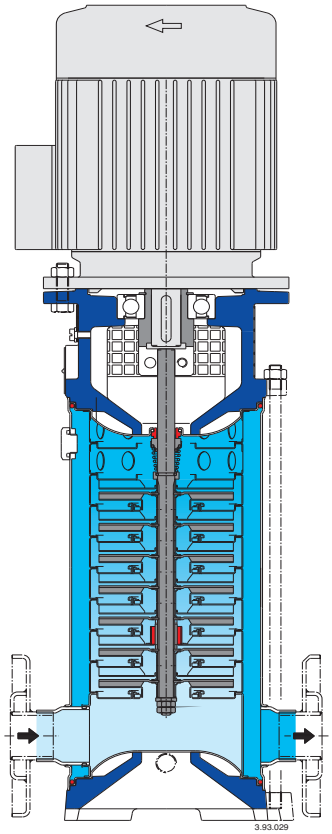

MXV 25, 32, 40, 50

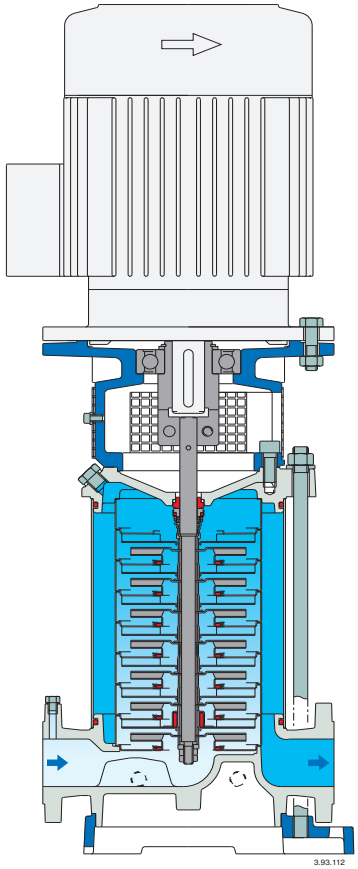

MXV 65, 80

CALPEDA ROMANIA - INFINITY PUMPS SRL
Tel: 0268.33.47.47 / 0722.244.944
vanzari@calpeda.ro | www.calpeda.ro

MXVL AISI 316L

Vertical Multi-Stage In-Line Pumps

The electropumps MXVL series comply with the European Regulation no. 547/2012.

Construction

Vertical multi-stage pumps with suction and delivery connections of the same diameter and arranged along the same axis (in-line).
Corrosion-resistant bearing sleeves lubricated by the pumped liquid.
Removal of the mechanical seal without dismantling the motor (for MXVL 50, MXVL 100 with motors exceeding 4 KW).
A pump with thrust bearing and sleeve coupling for use of any standard motor with IM V1 construction.

Version with frequency converter (on request)

Applications

For water supply systems.
For clean non-explosive liquids, without solid, filamentary or abrasive matter (with adaptation of sealing materials on request).
A universal pump for civil and industrial use, for pressure-boosting systems, fire-extinguishing systems, high-pressure washing plants, irrigation, agricultural uses and sport installations.

Operating conditions

Temperature of liquid: from -15 °C to +110 °C (up to +120 °C for MXVL 50).
Operating environment temperature: up to 40 °C.
Maximum permissible pressure in pump casing: 25 bar.
(16 bar for pumps with oval flanges).

Motor

Standard-type: 2-pole induction motor, 50 Hz (n ≈ 2900 rpm).
Construction IM V1 (EN 60034-7).
Motor suitable for operation with frequency converter.
Classification scheme IE3 for three-phase motors.
Insulation class F.
Protection IP 55.
three-phase with rated voltage: up to 3 kW 230/400 V;
from 4 kW 400/690 V.

MXVL 25, 32, 40, 50

All parts that come into contact with the liquid, including wet-end covers, are in chrome-nickel-molybdenum stainless steel AISI 316L.

Materials (wetted parts)

Component	Material
Flange External jacket Suction casing Delivery casing Stage casing Impeller Lower cover Upper cover Spacer sleeve	Stainless Steel 1.4404 EN 10088 (AISI 316L)
Pump shaft Plug	Stainless Steel 1.4404 EN 10088 (AISI 316L)
Bearing sleeve Bearing in stage casing	Corrosion-resistant, cemented carbide Ceramic alumina
Mechanical seal ISO 3069 - KU	Hard metal/Carbon/EPDM.
Wear ring	PPS (PTFE for MXVL 40)
O-rings	NBR (EPDM for MXVL 50)

Direction of rotation: **clockwise** as seen from the motor.

Variants (to be specified when ordering)

Pump with threaded ports (**G**) (for MXVL 25, 32, 40).
Pump with flanged ports (**F**).
Pump with oval flange ports (**O**) (for MXVL 50).
Pump without motor.
Pump with standard motor.

Other variants (on request)

With counter-flanges in chrome-nickel steel.
O-rings FPM. Other mechanical seal.
Pump with motor of Client's choice (if available).
Single-phase motor 230 V, up to 2.2 kW.
Other voltage ratings.
Frequency 60 Hz.

MXVL 65, 80, 100

Internal parts in contact with the liquid with pump casing and upper cover in chrome-nickel-molybdenum stainless steel AISI 316L.

Materials (wetted parts)

Component	Material
Pump casing Upper cover	Stainless Steel 1.4404 EN 10088 (AISI 316L)
External jacket Stage casing Impeller Spacer sleeve	Stainless Steel 1.4404 EN 10088 (AISI 316L)
Pump shaft Plug	Stainless Steel (AISI 316L)(AISI 329 for MXVL 100) Stainless Steel 1.4404 EN 10088 (AISI 316L)
Bearing sleeve Bearing in stage casing	Corrosion-resistant, cemented carbide Ceramic alumina (Corrosion-resistant, cemented carbide for MXVL 100)
Mechanical seal ISO 3069 - KU	Hard metal/Carbon/EPDM
Wear ring	PTFE
O-rings	NBR (EPDM for MXV 100)

Direction of rotation: **anticlockwise** as seen from the motor.
(**clockwise** as seen from the motor for MXVL 100)

Variants (to be specified when ordering)

Pump without motor.
Pump with standard motor.

Other variants (on request)

O-rings FPM. Other mechanical seal.
Pump with motor of Client's choice (if available).
Other voltage ratings.
Frequency 60 Hz.
Pump with support feet for horizontal installation (**H1** or **H2**).
Support feet for horizontal installation, set.
Welding counter-flanges, PN 25 (steel).

CALPEDA ROMANIA - INFINITY PUMPS SRL
Tel: 0268.33.47.47 / 0722.244.944
vanzari@calpeda.ro | www.calpeda.ro

MXVL AISI 316L Vertical Multi-Stage In-Line Pumps

Coverage chart

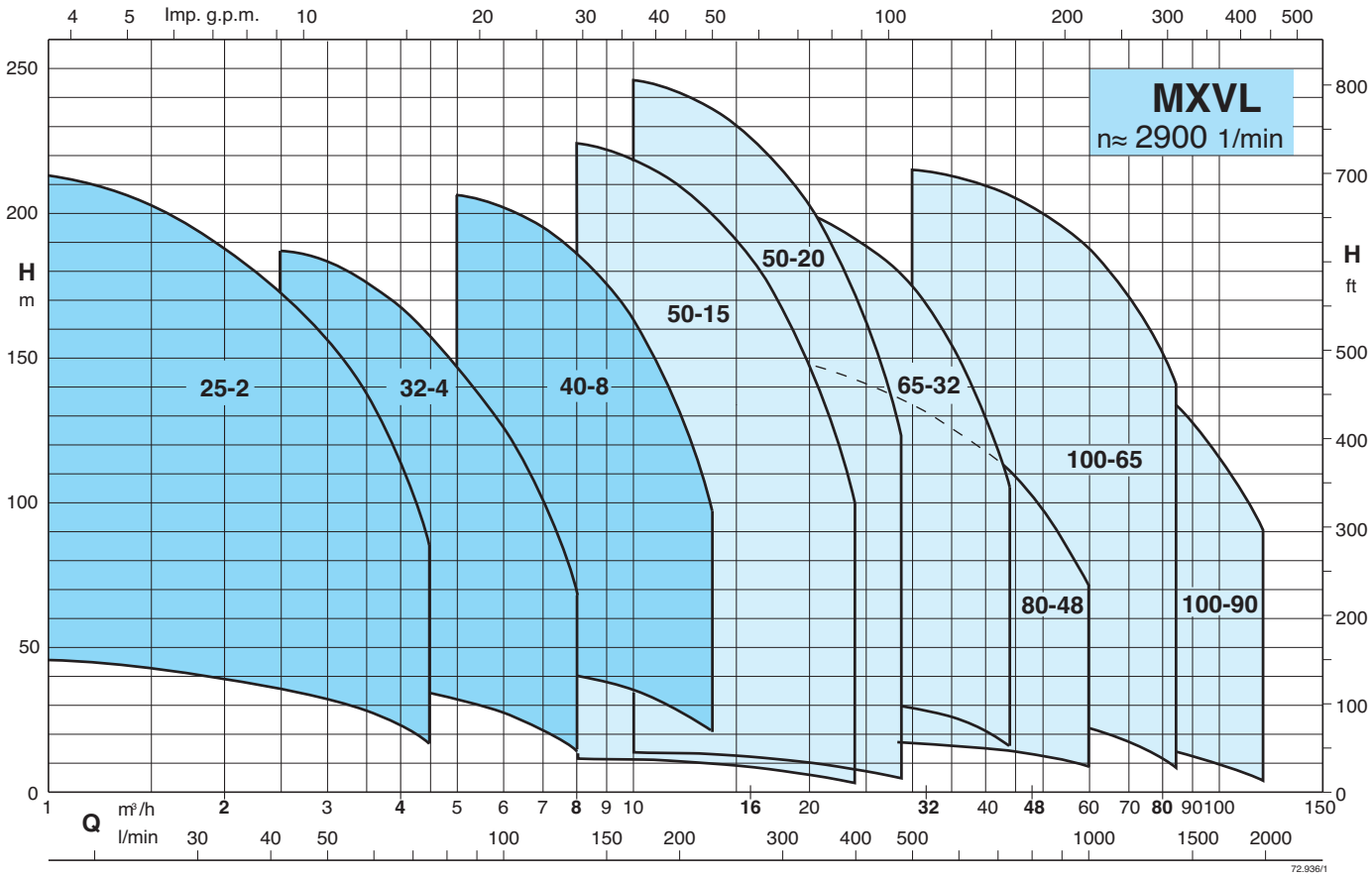

For characteristic curves, dimensions and weights see MXV

CALPEDA ROMANIA - INFINITY PUMPS SRL
Tel: 0268.33.47.47 / 0722.244.944
vanzari@calpeda.ro | www.calpeda.ro

SPA
Compact SPA

Self-Draining Whirlpool Pumps

Construction
Self-draining, single-impeller pumps, with motor insulated from pumped water, constructed with high quality, corrosion-proof plastic materials, with stainless steel diffuser.
Compact design (158 mm wide).
PVC pipe connections:
Ports for cementing joint, with external thread for union coupling.

Applications
For spas, hydromassage bathtubs and whirlpool baths.

Operating conditions
Water temperature up to 60 °C.
Room temperature up to 40 °C.
Maximum permissible pressure in the pump casing: 2,5 bar.
Continuous duty.

Motor
2-pole induction motor, 50 Hz (n ≈ 2800 rpm).
SPA: three-phase 230/400 V ± 10%.
SPAM: single-phase 230 V ± 10%, with thermal protector. Capacitor inside the terminal box.
Insulation class F.
Protection IP X5.
Classification scheme IE3 for three-phase motors from 0,75 kW.
Constructed in accordance with: EN 60034-1; EN 60034-30-1. EN 60335-1, EN 60335-2-41.

Materials

Component	Material
Pump casing Union coupling	ABS (Acrylonitrile-Butadiene-Styrene)
Diffuser cover Impeller	Glass reinforced thermoplastic: PPO-GF30, NORYL*
Diffuser-wall with wear-ring	Cr-Ni-Mo stainless steel 1.4401 EN 10088 (AISI 316)
Mechanical seal	Ceramic alumina, Carbon, FPM

* Trademark of General Electric

Special features on request
- Other voltages.
- Frequency 60 Hz (as per 60 Hz data sheet).

Coverage chart n ≈ 2800 rpm

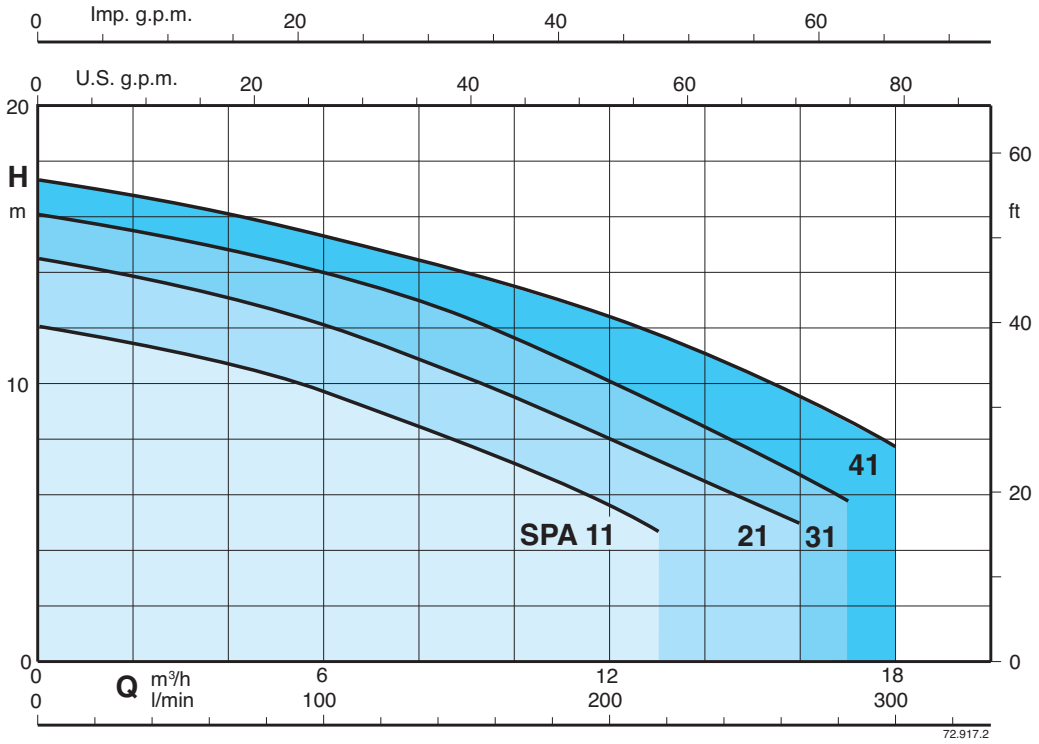

CALPEDA ROMANIA - INFINITY PUMPS SRL
Tel: 0268.33.47.47 / 0722.244.944
vanzari@calpeda.ro | www.calpeda.ro

SPA
Compact SPA

Self-Draining Whirlpool Pumps

Performance n ≈ 2800 rpm

3~	230 V	400 V	1~	230 V	P_1	P_2		Q m³/h	0	3	6	9	12	13	16	17	18
	A	A		A	kW	kW	HP	l/min	0	50	100	150	200	216	266	283	300
SPA 11	2,8	1,6	**SPAM 11**	3,3	0,73	0,45	0,6	H m	12	11,1	9,7	7,8	5,6	4,7			
SPA 21/A	3	1,7	**SPAM 21/A**	4,5	1	0,55	0,75		14,5	13,4	12,1	10,2	7,9	7,2	5		
SPA 31/B	3,7	2,2	**SPAM 31/A**	5,4	1,2	0,75	1		16,1	15,2	13,9	12,4	10,2	9,3	6,8	5,8	
SPA 41/A	4,7	2,7	**SPAM 41**	7	1,6	1,1	1,5		17,3	16,5	15,3	14	12,4	11,8	9,5	8,6	7,7

P_1 Max. power input. P_2 Rated motor power output. **H** Total head in m. Tolerances in accordance with UNI EN ISO 9906:2012

Dimensions and weights

Type	mm						kg	
	fM	H	m1	m2	w1	w	SPA	SPAM
SPA 11	339	176	34	26	122	97	6,7	6,8
SPA 21/A	371	191	39	31	136	102	8	9
SPA 31/B	371	191	39	31	136	102	9,8	10

SPA 11, 21/A, 31/B

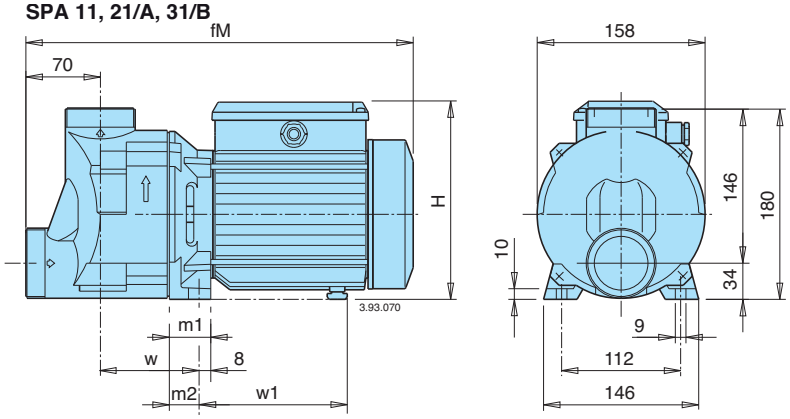

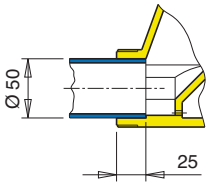

Cemented joint.

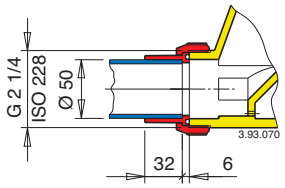

Threaded union coupling.

SPA 41/A

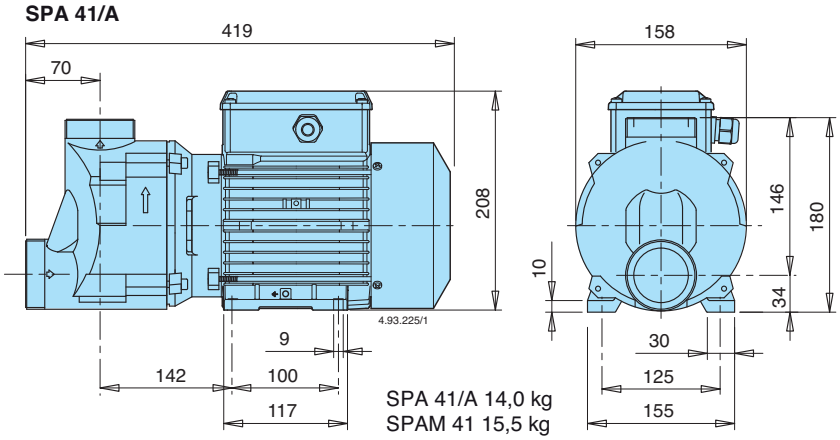

SPA 41/A 14,0 kg
SPAM 41 15,5 kg

Features

Diffuser with peripheral-longitudinal flow, of stainless steel for **extra reliability.**

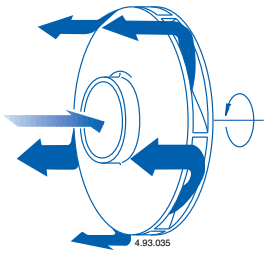

Mechanical seal without contact with the shaft, for **extra safety.**

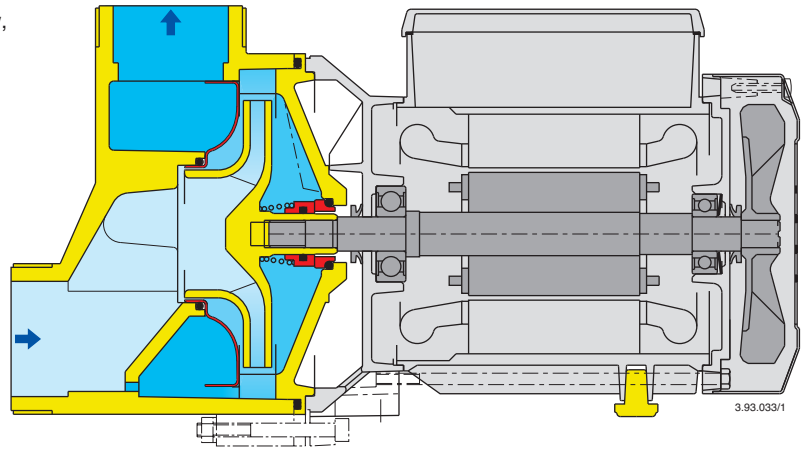

CALPEDA ROMANIA - INFINITY PUMPS SRL
Tel: 0268.33.47.47 / 0722.244.944
vanzari@calpeda.ro | www.calpeda.ro

MPC
Compact Pool

Self-Priming Swimming Pool Pumps

Construction
Self-priming swimming pool pumps with built-in strainer and motor insulated from pumped water.
The pump is made with high quality plastic materials, corrosion and sand erosion resistant.
With stainless steel diffuser.
Base-plate kit.

Applications
- For water circulation in swimming pool filtration systems.
- For clean or slightly dirty water with solids in suspension.

Operating conditions
Water temperature up to 60 °C.
Ambient temperature up to 40 °C.
Maximum permissible pressure in the pump casing 2,5 bar.
Continuous duty.

Motor
2-pole induction motor, 50 Hz (n ≈ 2800 rpm).

MPC: three-phase 230/400 V ± 10%.
MPCM: single-phase 230 V ± 10%, with thermal protector. Capacitor inside the terminal box.

Insulation class F.
Protection IP X4.
Classification scheme IE3 for three-phase motors from 0,75 kW.
Constructed in accordance with: EN 60034-1; EN 60034-30-1. EN 60335-1, EN 60335-2-41.

Special features on request
- Other voltages.
- Frequency 60 Hz (as per 60 Hz data sheet).

Materiali

Component	Material
Pump casing Diffuser cover Impeller	Glass reinforced thermoplastic PPO-GF30, NORYL
Strainer cover	Transparent polycarbonate, LEXAN
Strainer basket	Polypropylene
Diffuser funnel and wear-ring	Cr-Ni-Mo steel AISI 316
Mechanical seal	Ceramic alumina, Carbon, FPM

Certification marks for MPCM, up to 1,5 kW:

Coverage chart n ≈ 2800 rpm

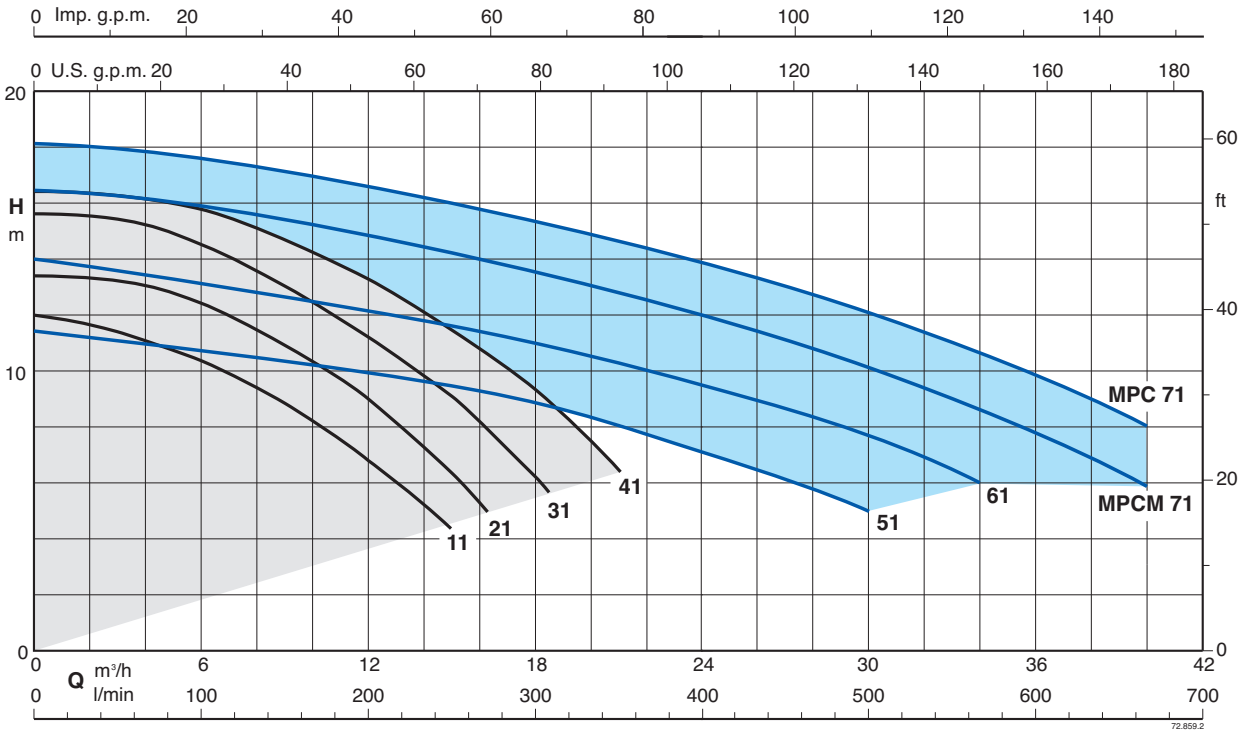

CALPEDA ROMANIA - INFINITY PUMPS SRL
Tel: 0268.33.47.47 / 0722.244.944
vanzari@calpeda.ro | www.calpeda.ro

MPC
Compact Pool

Self-Priming Swimming Pool Pumps

Performance n ≈ 2800 rpm

3~	230 V	400 V	1~	230 V	P_1	P_2		Q m³/h	0	3	6	9	12	15	18	21	
	A	A		A	kW	kW	HP	l/min	0	50	100	150	200	250	300	350	
MPC 11	2,8	1,6	**MPCM 11**	3,3	0,73	0,37	0,5		11,9	11,4	10,3	8,9	6,8	4,2			
MPC 21/A	3	1,7	**MPCM 21/A**	4,5	1	0,55	0,75	**H**	13,4	13,3	12,4	10,9	9	6,3			
MPC 31/B	3,7	2,2	**MPCM 31/A**	5,4	1,2	0,75	1	m	15,6	15,5	14,5	13	11,2	9,1	6,2		
MPC 41/A	4,7	2,7	**MPCM 41**	7	1,6	1,1	1,5		16,4	16,2	15,8	14,7	13,3	11,4	9,3	6,4	

3~	230 V	400 V	1~	230 V	P_1	P_2		Q m³/h	0	3	9	15	18	21	24	27	30	34	40
	A	A		A	kW	kW	HP	l/min	0	50	150	250	300	350	400	450	500	567	667
MPC 51/A	4,7	2,7	**MPCM 51**	7	1,6	1,1	1,5		11,5	11	10,5	9,5	9	8	7	6	5		
MPC 61/A	6,2	3,6	**MPCM 61**	9,2	2	1,5	2	**H**	14	13,5	12,5	11,5	11	10,5	9,5	8,5	7,5	6	
			MPCM 71/A	11,2	2,5	1,8	2,5	m	16,4	15,9	14,9	14	13,4	12,7	12,1	11,3	10,2	8,5	5,8
MPC 71/B	9,15	5,3				2,2	3		18,2	18	17	16	15,5	14,5	14	13	12	10,5	8

P_1 Max. power input. P_2 Rated motor power output. **H** Total head in m. Tolerances in accordance with UNI EN ISO 9906:2012

Self-Priming Capability with the pump located above the water level

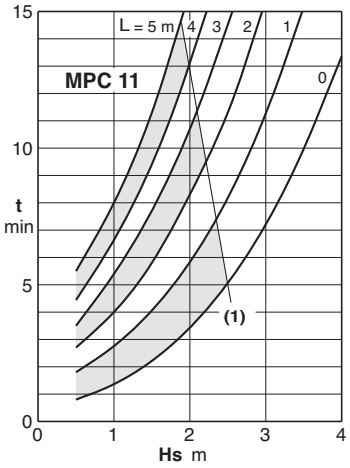

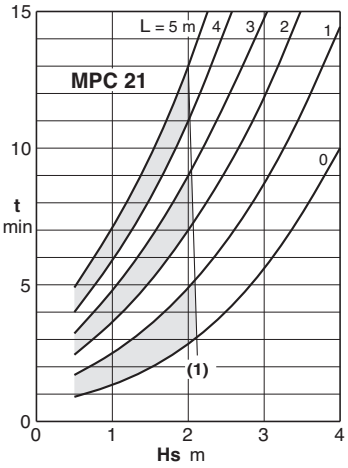

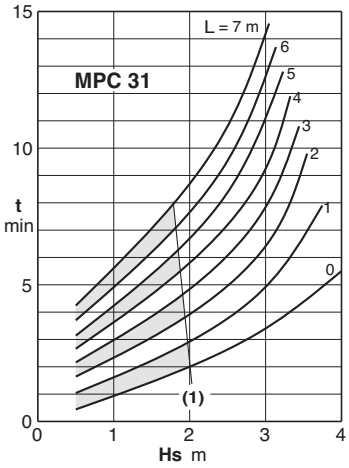

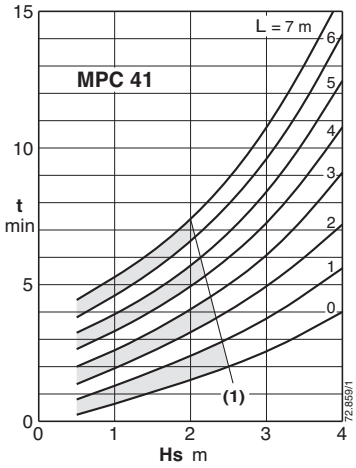

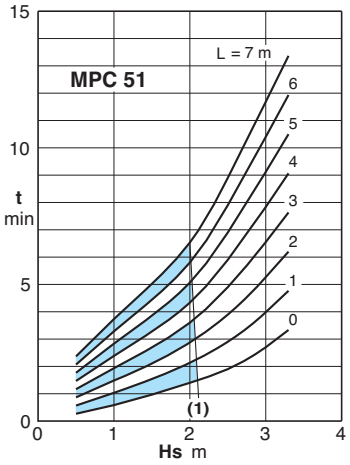

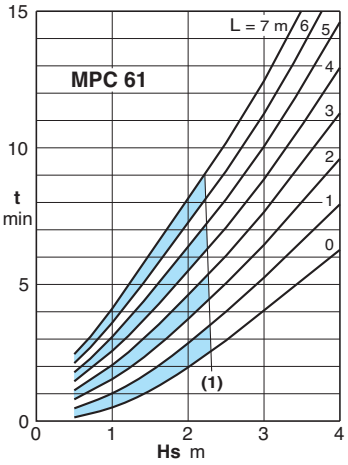

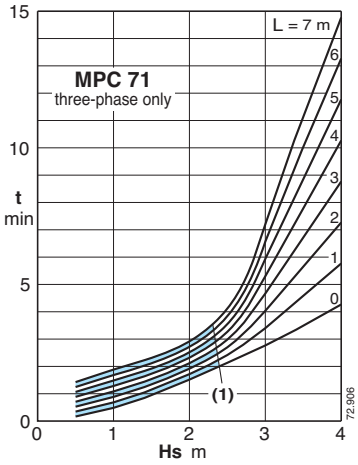

(1) Application limit for automatic self-repriming at each start-up, without check valve.

L (m) Horizontal length of suction pipe above the water level.

Hs (m) Suction lift.

t (min) Self-priming time.

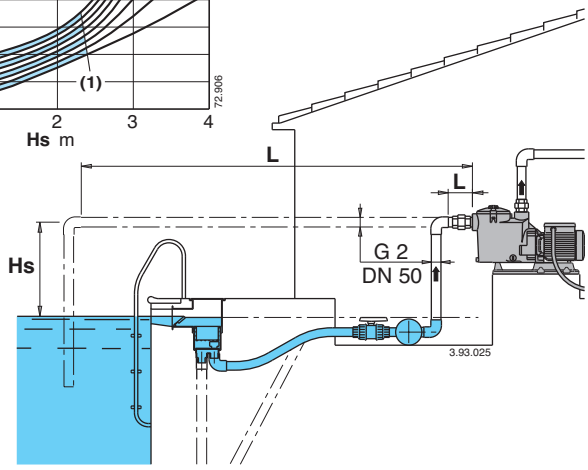

CALPEDA ROMANIA - INFINITY PUMPS SRL
Tel: 0268.33.47.47 / 0722.244.944
vanzari@calpeda.ro | www.calpeda.ro

MPC
Compact Pool

Self-Priming Swimming Pool Pumps

Dimensions and weights

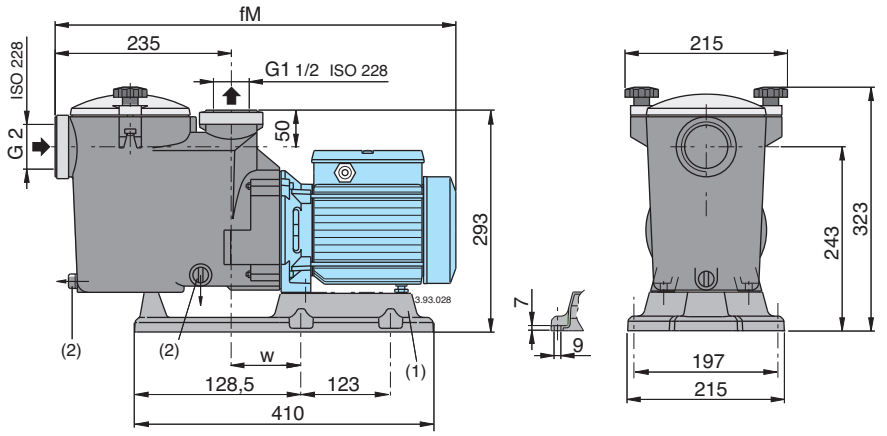

TYPE	mm		kg	
	fM	w	MPC	MPCM
MPC 11 - MPCM 11	504	100	8,9	9
MPC 21/A - MPCM 21/A	536	100	10,2	11,3
MPC 31/B - MPCM 31/A	536	100	12,0	12,2

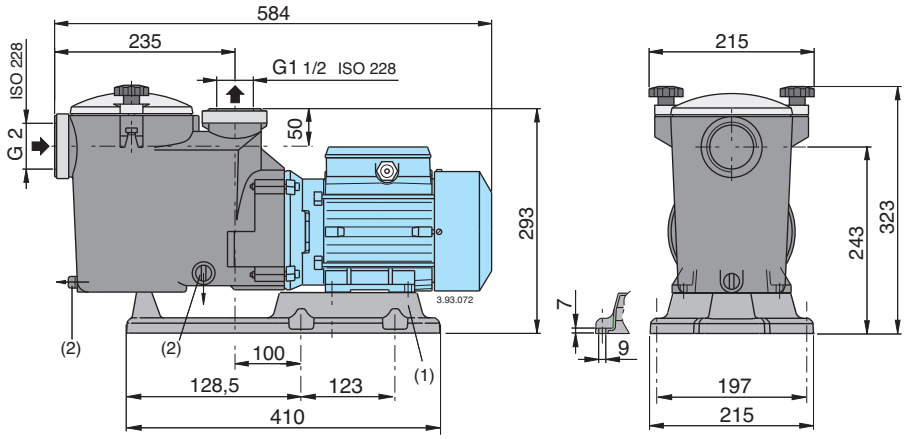

MPCM 41 17,5 kg
MPC 41/A 16,0 kg

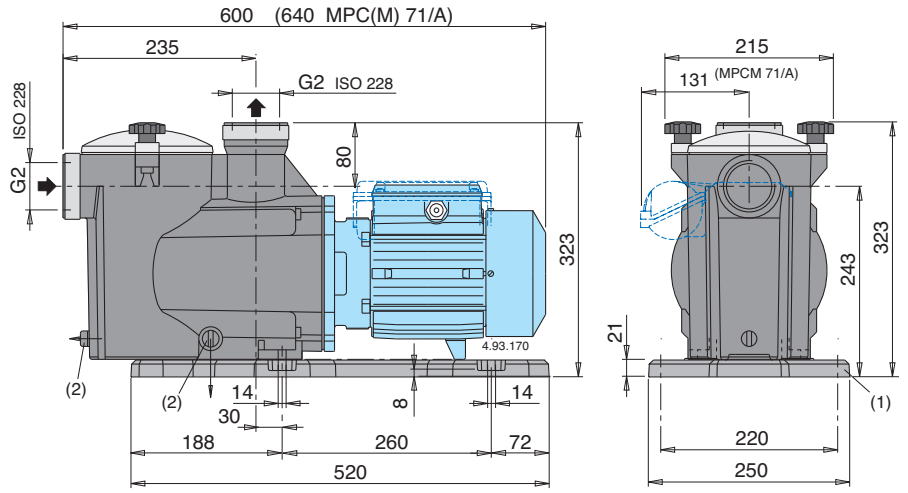

MPCM 51 18,9 kg
MPC 51/A 17,4 kg
MPCM 61 20,7 kg
MPC 61/A 19,6 kg
MPCM 71/A 23,8 kg
MPC 71/B 22,5 kg

(1) Base-plate kit (2) Draining

CALPEDA ROMANIA - INFINITY PUMPS SRL
Tel: 0268.33.47.47 / 0722.244.944
vanzari@calpeda.ro | www.calpeda.ro

Features

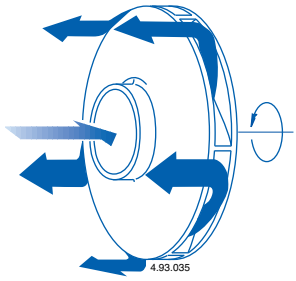

Diffuser with peripheral-longitudinal flow, for a **quicker self-priming**

Strong transparent Lexan strainer cover

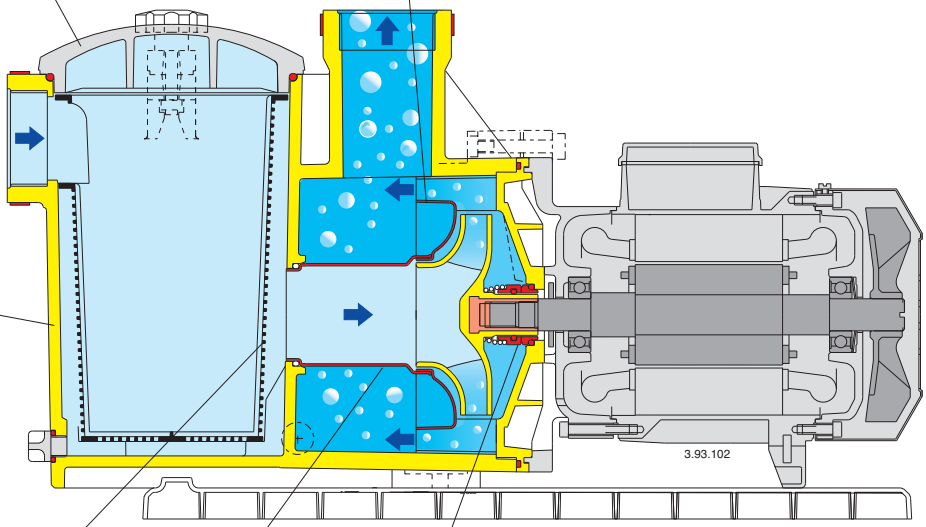

Strong Noryl pump casing

Large 2-litre capacity strainer basket

Stainless steel AISI 316 wear-ring diffuser-funnel, for **extra reliability**

Mechanical seal without contact with the shaft, for **extra safety**

CALPEDA ROMANIA - INFINITY PUMPS SRL
Tel: 0268.33.47.47 / 0722.244.944
vanzari@calpeda.ro | www.calpeda.ro

NMP

Self-Priming Centrifugal Pumps
with built-in strainer

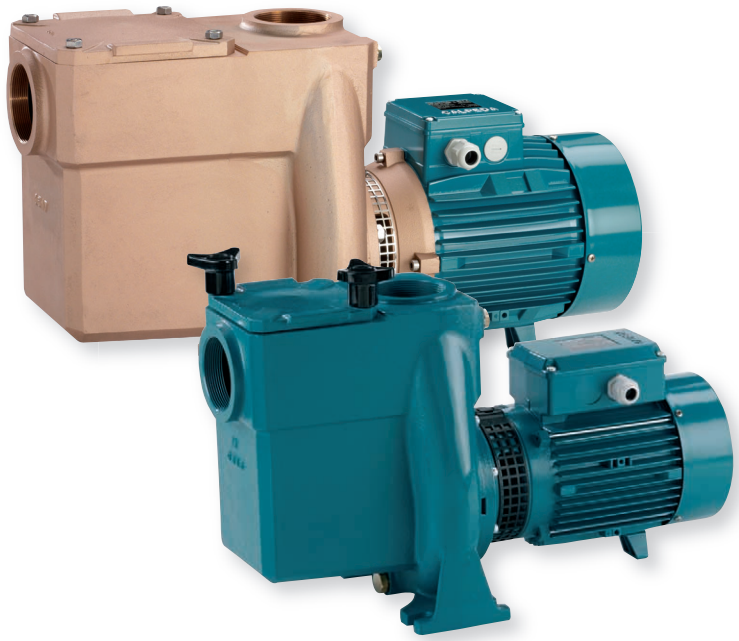

Construction
Close-coupled self-priming centrifugal pumps with built-in strainer.
Inner basket with Ø 3 mm holes.
NMP: version with pump casing and lantern bracket in cast iron, with cataphoresis coating.
B-NMP: version with pump casing and lanter bracket in bronze (the pumps are supplied fully painted).

Applications
For water circulation in swimming pool filtration systems.
For clean or slightly dirty water with solids in suspension.

Operating conditions
Liquid temperature up to 60° C.
Ambient temperature up to 40° C.
Total suction lift up to 7 m.
Maximum permissible working pressure up to 6 bar.
Continuous duty.

Motor
2-pole induction motor, 50 Hz (n ≈ 2900 rpm).
NMP: three-phase 230/400 V ± 10% up to 3 kW;
400/690 V ± 10% from 4 to 11 kW;
NMPM: single-phase 230 V ± 10%, with thermal protector.
Insulation class F.
Protection IP 54.
Classification scheme IE3 for three-phase motors from 0,75 kW.
Constructed in accordance with: EN 60034-1; EN 60034-30-1.
EN 60335-1, EN 60335-2-41.

Materials

Components	NMP	B-NMP
Pump casing Lantern bracket	Cast iron GJL 200 EN 1561	Bronze G-Cu Sn 10 EN 1982
Impeller	Cast iron GJL 200 EN 1561	Bronze G-Cu Sn 10 EN 1982
	Brass P- Cu Zn 40 Pb 2 UNI 5705 for NMP 32/12	
Shaft	Chrome-nickel steel 1.4305 EN 10088 (AISI 303)	Cr-Ni-Mo steel 1.4401 EN 10088 (AISI 316)
Strainer cover	Cast iron GJL 200 EN 1561	Bronze G-Cu Sn 10 EN 1982
Strainer	Chrome-nickel steel 1.4301 EN 10088 (AISI 304)	
Mechanical seal	Carbon - Ceramic - FPM	

Special features on request
- Other voltages.
- Frequency 60 Hz (as per 60 Hz data sheet).
- Protection IP 55.
- Special mechanical seal
- Higher liquid or ambient temperatures.

Coverage chart n ≈ 2900 rpm

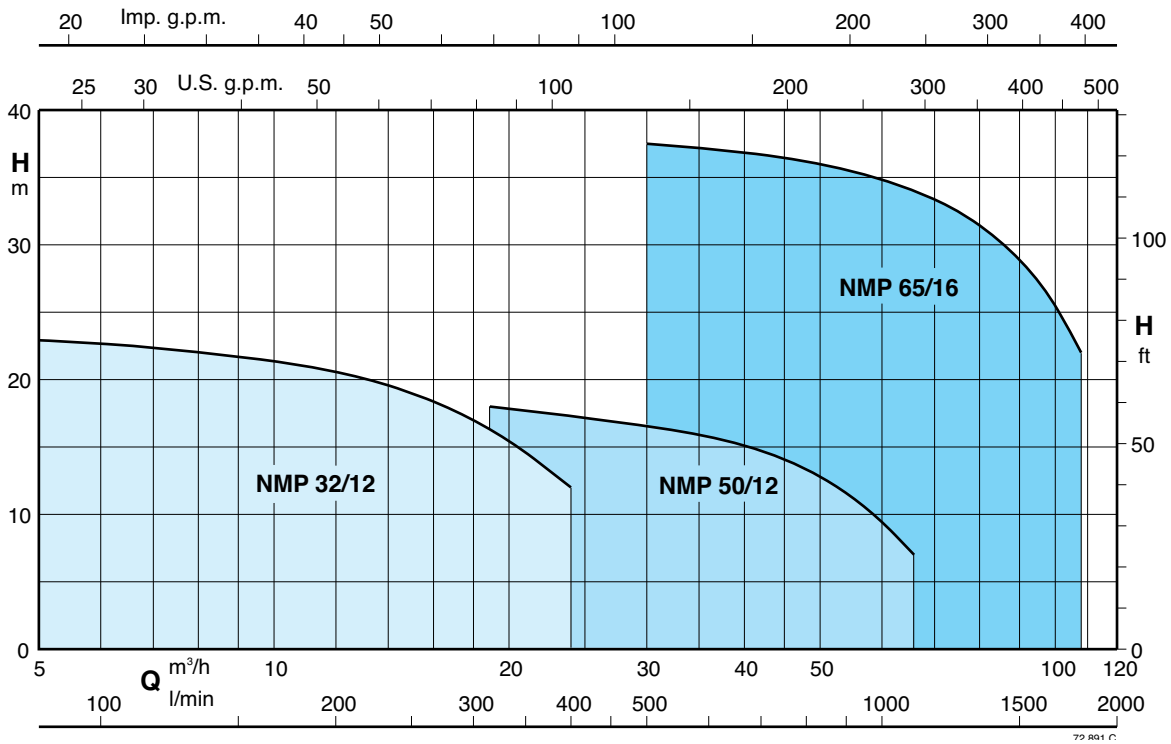

CALPEDA ROMANIA - INFINITY PUMPS SRL
Tel: 0268.33.47.47 / 0722.244.944
vanzari@calpeda.ro | www.calpeda.ro

NMP

Self-Priming Centrifugal Pumps
with built-in strainer

Performance n ≈ 2900 rpm

3 ~	230V	400V	1 ~	230V	P_1	P_2		Q m³/h	6,6	9,6	10,8	12	13,2	15	18,9	21	24	30	42	48	54	60	66	75	84	96	108
	A	A		A	kW	kW	HP	l/min	110	160	180	200	220	250	315	350	400	500	700	800	900	1000	1100	1250	1400	1600	1800
B-**NMP 32/12FE**	3,3	1,9				0,55	0,75		13	12	11	10,5	10	9													
			B-**NMPM 32/12FE**	4,5	0,8	0,55	0,75		12	11	10	9,5	9	8													
B-**NMP 32/12DE**	3,3	1,9				0,75	1		18	17	16	15,5	15	14													
			B-**NMPM 32/12DE**	5,8	1,3	0,75	1		17	16	15	14,5	14	13													
B-**NMP 32/12A/A**	4,7	2,7				1,1	1,5		22	21	20,5	20	19,5	18,5													
			B-**NMPM 32/12AE**	7,4	1,85	1,1	1,5		21,5	20,5	19,5	19	18,5	17,5													
B-**NMP 32/12S/A**	7,5	4,3	B-**NMPM 32/12SE**	9,2	2	1,5	2		22,5	21,5	21	20,5	20	19	16*	15*	12*										
B-**NMP 50/12H/A**	4,7	2,7	B-**NMPM 50/12HE**	7,4	1,85	1,1	1,5	**H**							9	9	8,5	7,5	5,5	4,5	3						
B-**NMP 50/12G/A**	7,5	4,3	B-**NMPM 50/12GE**	9,2	2	1,5	2	m							12	12	11,5	10,5	8	7	5	3,5*					
B-**NMP 50/12F/B**	9,15	5,3				2,2	3								16	16	15,5	14,5	12	10,5	8,5	6,5*	5*				
B-**NMP 50/12D/A**	11,5	6,6				3	4								18	18	17,5	16,5	15	13	11,5	9,5*	7*				
B-**NMP 65/16F/B**		9,6				4	5,5											18	17	16,5	15,5	14,5	13,5	11,5	9,5	6,5*	
B-**NMP 65/16E/A**		10,8				5,5	7,5											20,5	19,5	19	18	17	16	14,5	12,5	9,5*	
B-**NMP 65/16D/A**		14,3				7,5	10											26	25	24,5	24	23	22	21	19	16*	11*
B-**NMP 65/16C/B**		18,5				9,2	12,5											29,5	28,5	28	27,5	27	26,5	25	23,5	20*	16*
B-**NMP 65/16A/B**		21,5				11	15											37,5	36,5	36	35,5	35	34	32,5	30,5	27*	22*

P_1 Maximum power input.
P_2 Rated motor power output.
B-NMP = Bronze construction.
H Total head in m.
* Maximum suction lift 2-3 m.
Tolerances according to UNI EN ISO 9906:2012

Dimensions and weights

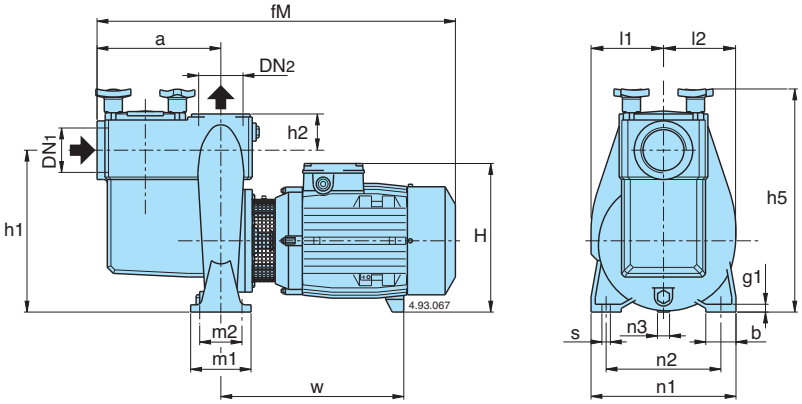

TYPE	DN1	DN2	mm																
	ISO 228		a	fM	h1	h2	H	h5	m1	m2	n1	n2	n3	b	s	l1	l2	w	g1
B-**NMP 32/12DE-FE** B-**NMP 32/12S/A-A/A**	G 2	G 2	195	510	230	50	228	320	100	70	190	140	30	50	14	106	99	220	12
B-**NMP 50/12G/A-H/A** B-**NMP 50/12F/B** B-**NMP 50/12D/A**	G 2½	G 2½	205	540 580 602	262	60	240 240 250	360	100	70	240	190	37 37 20	50	14	120	117	234 274 298	12
B-**NMP 65/16F/B** B-**NMP 65/16D/A-E/A** B-**NMP 65/16C/B** B-**NMP 65/16A/B**	G 3	G 3	320	717 748 858 908	360	80	298 320 345 345	470	125	95	280	212	60 49 43 43	65	14	165	164	298 279 408 458	15

TYPE	**NMP** kg	**B-NMP** kg
B-**NMP 32/12FE**	30	32
B-**NMP 32/12DE**	30	32
B-**NMP 32/12A/A**	31	33
B-**NMP 32/12S/A**	33	35
B-**NMP 50/12H/A**	37	39
B-**NMP 50/12G/A**	38,5	40
B-**NMP 50/12F/B**	41,5	44,5
B-**NMP 50/12D/A**	50,5	54,5
B-**NMP 65/16F/B**	79	89,5
B-**NMP 65/16E/A**	92	102
B-**NMP 65/16D/A**	97,5	107,5
B-**NMP 65/16C/B**	121	130
B-**NMP 65/16A/B**	127	137

CALPEDA ROMANIA - INFINITY PUMPS SRL
Tel: 0268.33.47.47 / 0722.244.944
vanzari@calpeda.ro | www.calpeda.ro

NMP

Self-Priming Centrifugal Pumps
with built-in strainer

Characteristic curves n ≈ 2900 rpm

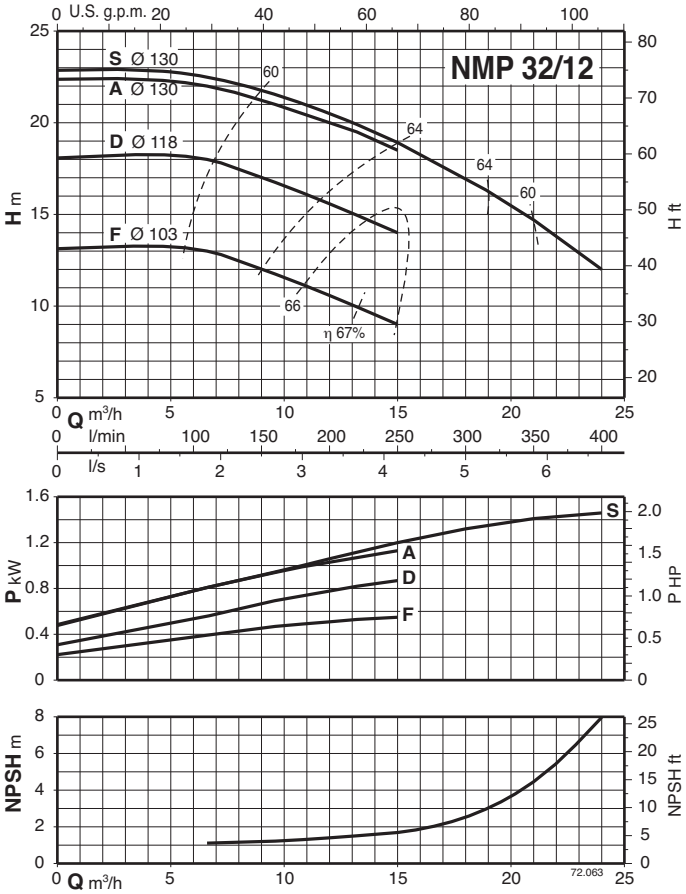

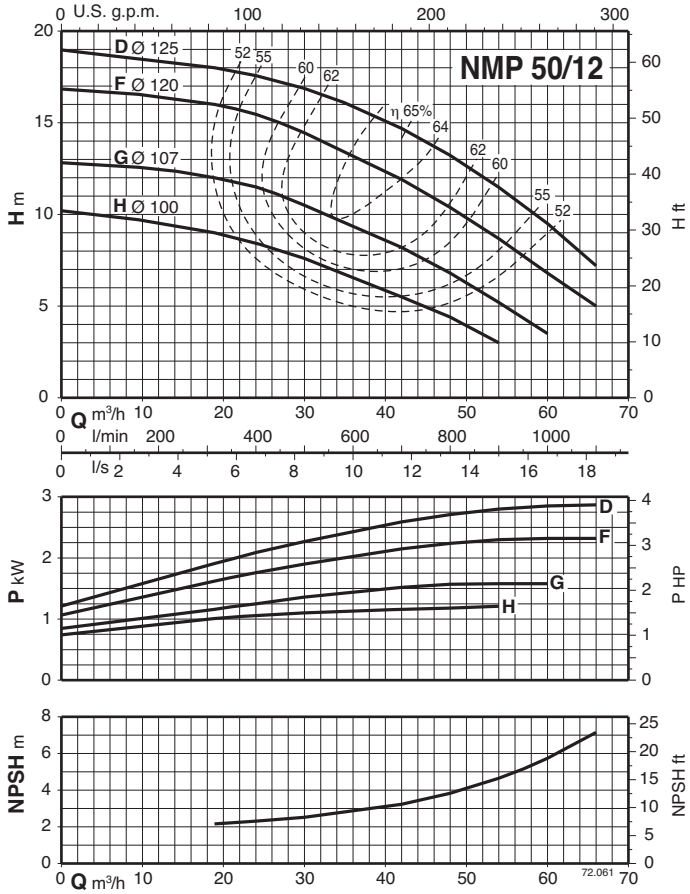

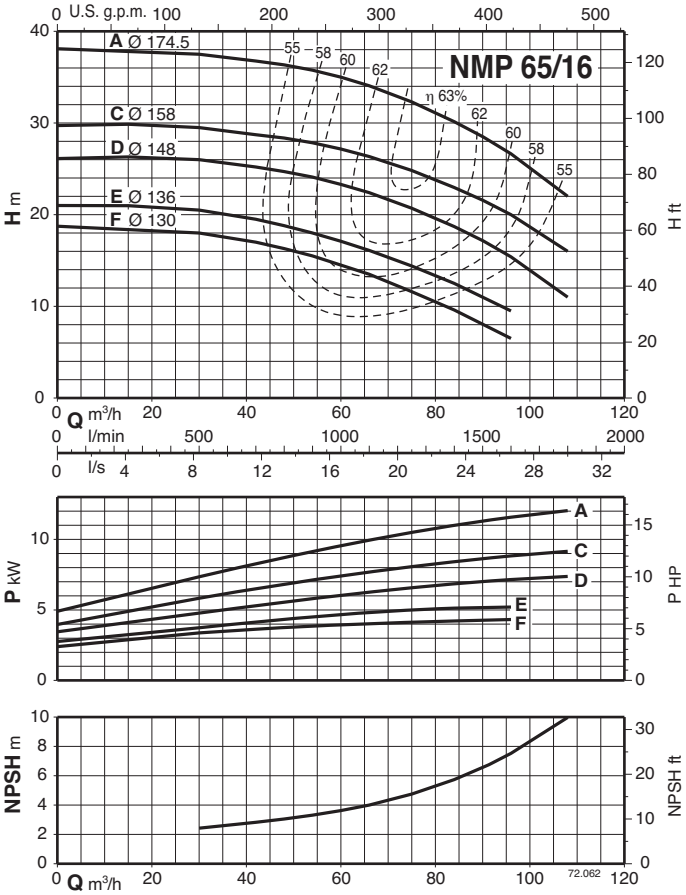

CALPEDA ROMANIA - INFINITY PUMPS SRL
Tel: 0268.33.47.47 / 0722.244.944
vanzari@calpeda.ro | www.calpeda.ro

NMP

Self-Priming Centrifugal Pumps
with built-in strainer

Features

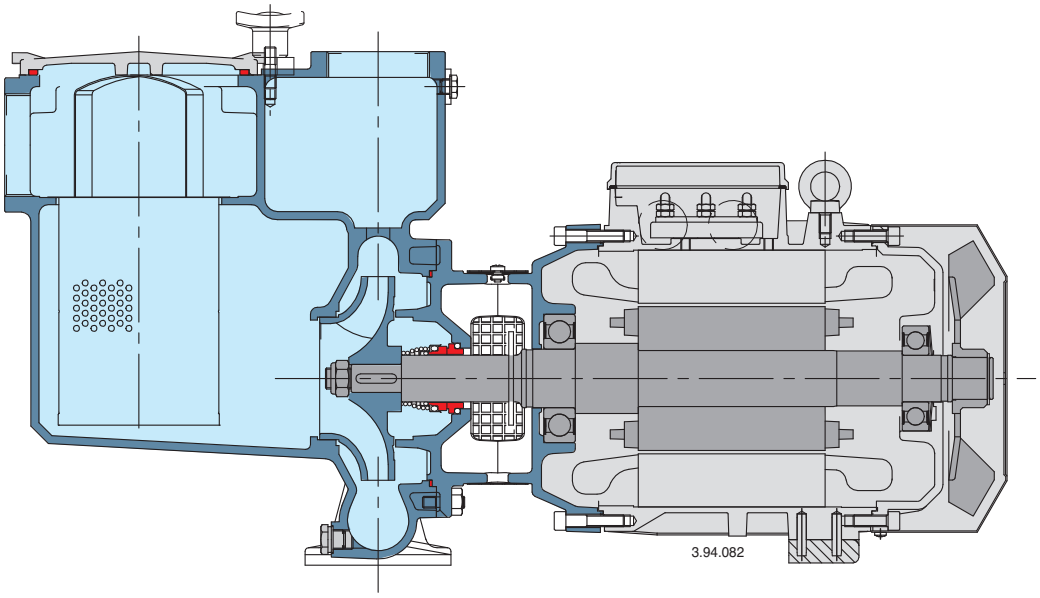

Flexible
The option to choose between cast iron and bronze materias for the hydraulic parts in contact with the pumped liquid allows NMP seies pumps to be selected for use with different types of liquids.

Stainless steel filter
A large capacity Stainless steel filter is fitted which is easy to remove for inspection and cleaning.

Exclusive design
An innovative, patented guard prevents contact with rotating parts, proving protection to the end user whilst allowing for inspection of the mechanical seal.

Reliable
The bearing and shaft are designed to ensure the reduction of the stress, providing high reliability under all operating conditions.

CALPEDA ROMANIA - INFINITY PUMPS SRL
Tel: 0268.33.47.47 / 0722.244.944
vanzari@calpeda.ro | www.calpeda.ro

PF

Pre-filters in stainless steel

Construction

Pre-filters with removable basket, constructed in stainless steel.
Loose ring flange connections.
Clamp type closing with lever and double adjustment clamp.
Inner basket with Ø 6 mm holes.

Applications

For water circulation pump in filtration plants in swimming pools.
To prevent foreign bodies from entering the pump and the plant.

Operating conditions

Max working pressure: 3 bar.
Max flow: 180 m³/h for PF 100.
240 m³/h for PF 125.
300 m³/h for PF 150.

Materials

Components		Materials
Pre-filter body	PF 100-304 PF 125-304 PF 150-304	Stainless steel AISI 304
Pre-filter body	PF 100-316 PF 125-316 PF 150-316	Stainless steel AISI 316
Strainer basket		Stainless steel AISI 316

Diagram of head loss

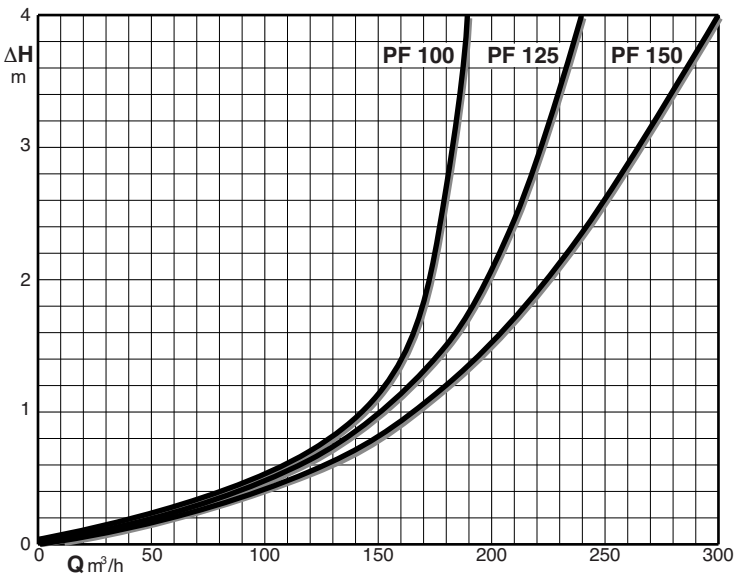

ΔH = Head loss in meters

Dimensions and weights

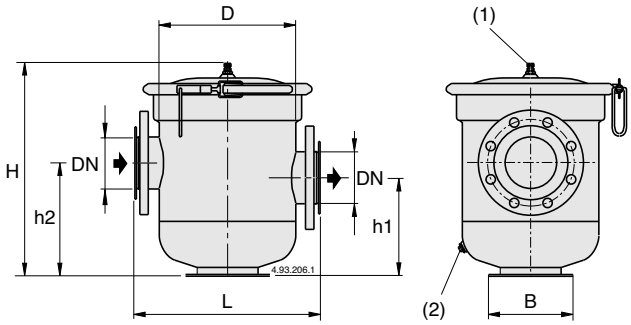

Flanges UNI 6089 PN 10

Type	mm							kg
	DN	H	h1	h2	L	D	B	
PF 100	100	530	247	287	440	292	185	17,5
PF 125	125				440	292	185	17,7
PF 150	150	550	260	300	500	350	210	23,3

1 Relief valve 2 Draining plug

CALPEDA ROMANIA - INFINITY PUMPS SRL
Tel: 0268.33.47.47 / 0722.244.944
vanzari@calpeda.ro | www.calpeda.ro

PF

Pre-filters in stainless steel

Recomended pumps and pre-filters

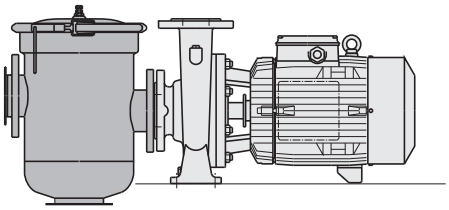

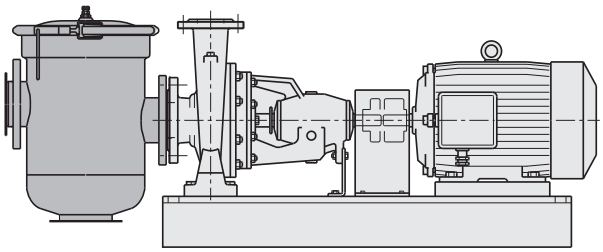

Pump				Pre-filter type	**Q** m^3/h		**H** m	
Bronze	Cast iron	kW	HP		min	max	min	max
B-NM 80/160E/B	NM 80/16E/B	7,5	10	**PF 100**	75	168	10,6	21,5
B-NM 80/160D/C	NM 80/16D/C	9,2	12,5		75	168	14,4	25,2
B-NM 80/160C/C	NM 80/16C/C	11	15		75	180	16,4	28,7
B-NM 80/160B/C	NM 80/16B/C	15	20		75	192	22,4	34,8
B-NM 80/160A/C	NM 80/16A/C	18,5	25		75	192	28,1	39,9
B-N4 80/200A/A	NM4 80/20A/A	4	5,5	**PF 100**	30	120	6	13,9
B-N4 100/200B/A	NM4 100/20B/A	4	5,5	**PF 125**	48	168	4,5	15,2
B-N4 100/200A/A	NM4 100/20A/A	7,5	10		48	192	6	22,3
B-N4 100/250B/A	NM4 100/25B/A	5,5	7,5	**PF 125**	48	210	5,5	12
B-N4 100/250A/A	NM4 100/25A/A	9,2	12,5		48	210	8,9	19,5
B-N4 125/250C/A	NM4 125/25C/A	11	15	**PF 150**	84	300	5,8	16,7
B-N4 125/250B/A	NM4 125/250B/A	9,2	12,5		84	330	8,2	19,3
B-N4 125/250A/A	NM4 125/250A/A	15	20		84	330	9,3	22,7

Examples of installations

Operation with positive suction head

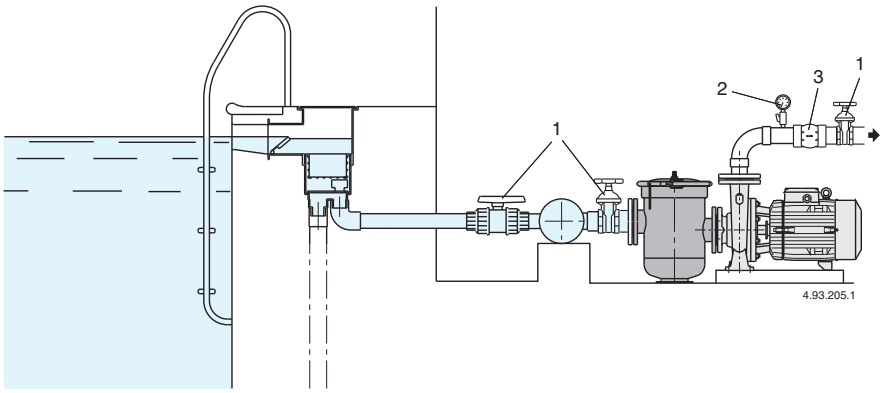

Operation with suction lift

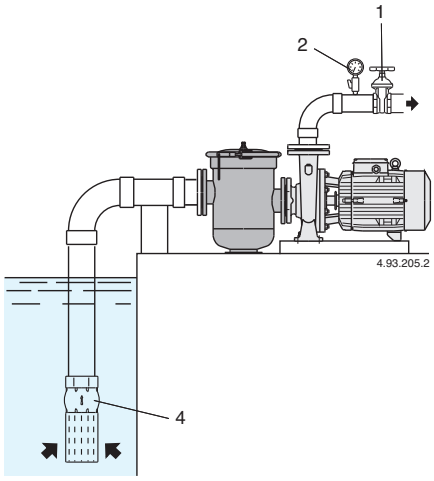

1 Gate valve 2 Pressure gauge 3 Check valve 4 Foot valve

CALPEDA ROMANIA - INFINITY PUMPS SRL
Tel: 0268.33.47.47 / 0722.244.944
vanzari@calpeda.ro | www.calpeda.ro

A

Self-Priming Centrifugal Pumps
with open impeller

Construction
Close-coupled centrifugal pumps with open impeller.
The built-in backflow preventer avoids reverse siphoning when the pump is stopped and assures automatic re-priming at the next start.
The pump re-primes itself even if partially filled with liquid and with completely empty suction pipe.
A: version with pump casing and lantern bracket in cast iron.
B-A: version with pump casing and lantern bracket in bronze (the pumps are supplied fully painted).

Applications
For clean or slightly dirty water, also with solids up to 10 mm grain size for A 40, A 50 and 15 mm for A 65, A 80.
For draining a basin or a sump.
For irrigation. For civil and industrial applications.

Operating conditions
Liquid temperature from -10 °C to +90 °C.
Room temperature up to 40 °C.
Maximum permissible working pressure up to 6 bar (10 bar for A 80-170).
Continuous duty.

Motor
2-pole induction motor, 50 Hz (n ≈ 2900 rpm).
A three-phase 230/400 V ± 10% up to 3 kW;
400/690 V ± 10% from 4 to 7,5 kW;
AM: single-phase 230 V ± 10%, with thermal protector.
Capacitor inside the terminal box.
Insulation class F.
Protection IP 54.
Classification scheme IE3 for three-phase motors from 0,75 kW.
Constructed in accordance with: EN 60034-1; EN 60034-30-1.
EN 60335-1, EN 60335-2-41.

Materials

Components	A	B-A
Pump casing Suction flange Inspection cover (for A 65, A 80) Lantern bracket Impeller	Cast iron GJL 200 EN 1561	Bronze G-Cu Sn 10 EN 1982
Shaft	Chrome-nickel steel 1.4305 EN 10088 (AISI 303)	Cr-Ni-Mo steel 1.4401 EN 10088 (AISI 316)
	Chrome steel 1.4104 EN 10088 (AISI 430) for A 40/110, A 65-150A,B	
Mechanical seal	Carbon - Ceramic - NBR	

Special features on request
Other voltages.
Frequency 60 Hz (as per 60 Hz data sheet).
Protection IP 55.
Special mechanical seal.
Higher or lower liquid or ambient temperatures.
Construction with bearing bracket.

Coverage chart n ≈ 2900 rpm

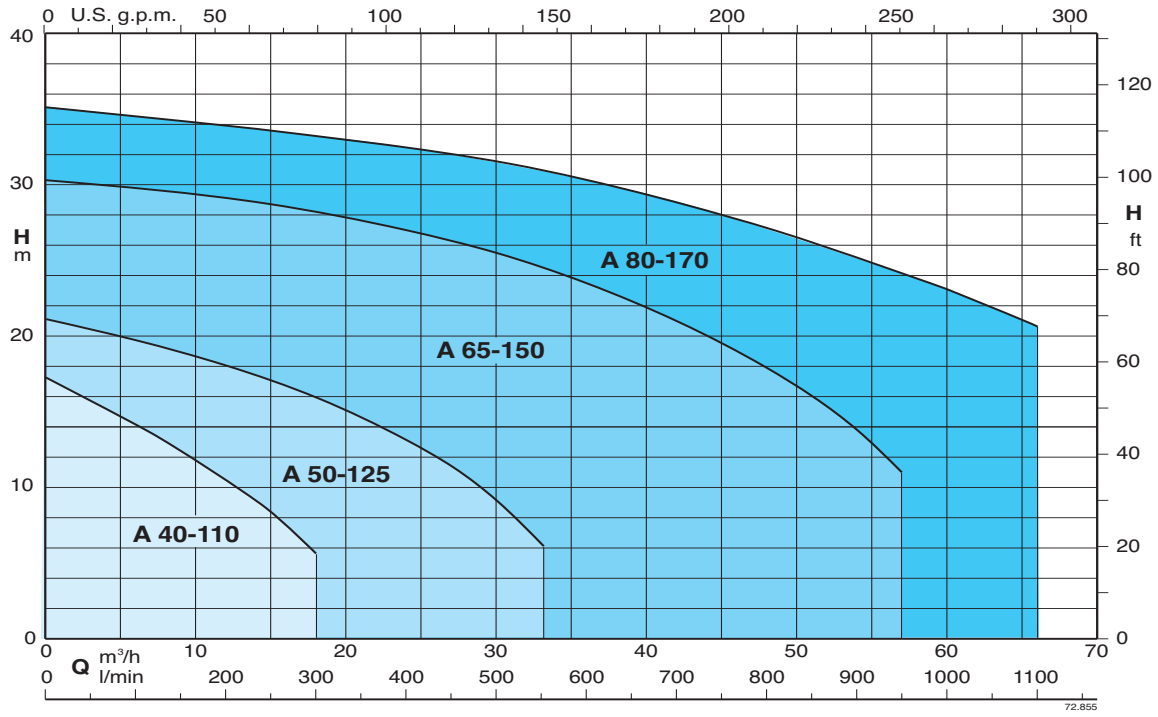

CALPEDA ROMANIA - INFINITY PUMPS SRL
Tel: 0268.33.47.47 / 0722.244.944
vanzari@calpeda.ro | www.calpeda.ro

A

Self-Priming Centrifugal Pumps
with open impeller

Performance n ≈ 2900 rpm

3 ~	230 V	400 V	1 ~	230 V	P_1	P_2		Q m³/h	3,6	4,8	6	7,5	8,4	9,6	10,8	12	15	18
	A	A		A	kW	kW	HP	l/min	60	80	100	125	140	160	180	200	250	300
A 40-110B/A B-A 40-110B/A	2,8	1,6	**AM 40-110B/A** B-AM 40-110B/A	4,5	0,85	0,55	0,75	**H** m	12,9	12,4	11,8	11	10,4	9,8	9	8,3	6	3,4
A 40-110A/B B-A 40-110A/B	3,7	2,2	**AM 40-110A/A** B-AM 40-110A/A	6	1,1	0,75	1		15,4	14,9	14,2	13,3	12,9	12,1	11,3	10,5	8,4	5,6

3 ~	230 V	400 V	1 ~	230 V	P_1	P_2		Q m³/h	6	9	12	15	18	21	24	27	30	33
	A	A		A	kW	kW	HP	l/min	100	150	200	250	300	350	400	450	500	550
A 50-125CE B-A 50-125CE	3,3	1,9	**AM 50-125CE** B-AM 50-125CE	5,8	1,2	0,75	1	**H** m	12,8	12,2	11,3	10	8,5	7	5,3	3,3		
A 50-125B/A B-A 50-125B/A	4,7	2,7	**AM 50-125BE** B-AM 50-125BE	7,4	1,6	1,1	1,5		15,5	14,9	14,2	12,9	11,6	10	8,3	6,2	4	
A 50-125A/A B-A 50-125A/A	7,5	4,3	**AM 50-125AE** B-AM 50-125AE	9,2	2,1	1,5	2		19,5	19	18	17	15,5	14	12,5	10,5	8	5

3 ~	230 V	400 V		P_2		Q m³/h	15	18	24	30	33	36	42	48	54	57
	A	A		kW	HP	l/min	250	300	400	500	550	600	700	800	900	950
A 65-150C/C B-A 65-150C/B	11,5 9,15	6,6 5,3		2,2	3	**H** m	17,5	17	16	14	13	11,5	9	6,5		
A 65-150B/B B-A 65-150B/A	11,5	6,6		3	4		21,5	21	19,5	17,5	16,5	15,5	12,5	9,5	6,5	
A 65-150A/C B-A 65-150A/B	-	9,6		4	5,5		29	28	27	25,5	24,5	23,5	21	18	14	11

3 ~	230 V	400 V		P_2		Q m³/h	15	18	21	24	30	36	45	54	60	66
	A	A		kW	HP	l/min	250	300	350	400	500	600	750	900	1000	1100
A 80-170B/A B-A 80-170B/A	-	10,9		5,5	7,5	**H** m	27,3	27,3	27	26,8	25,7	24,4	22,1	19	16,7	13,7
A 80-170A/A B-A 80-170A/A	-	14,3		7,5	10		33,6	33,2	32,9	32,5	31,6	30,5	28,1	25,3	23,2	20,4

P_1 Maximum power input. P_2 Rated motor power output. **H** Total head in m. B-A, B-AM = Bronze construction. Tolerances according to UNI EN ISO 9906:2012

CALPEDA ROMANIA - INFINITY PUMPS SRL
Tel: 0268.33.47.47 / 0722.244.944
vanzari@calpeda.ro | www.calpeda.ro

Self-priming capability

with DN 40 mm suction pipe

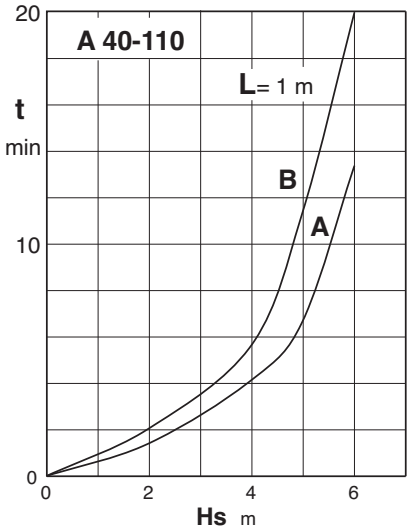

with DN 50 mm suction pipe

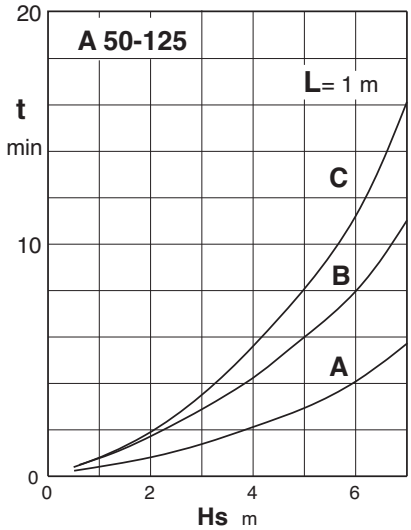

with DN 65 mm suction pipe

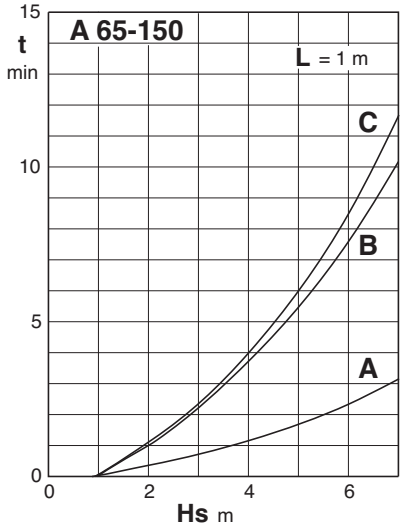

with DN 80 mm suction pipe

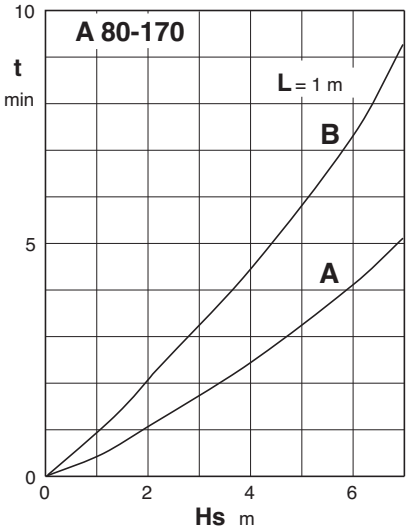

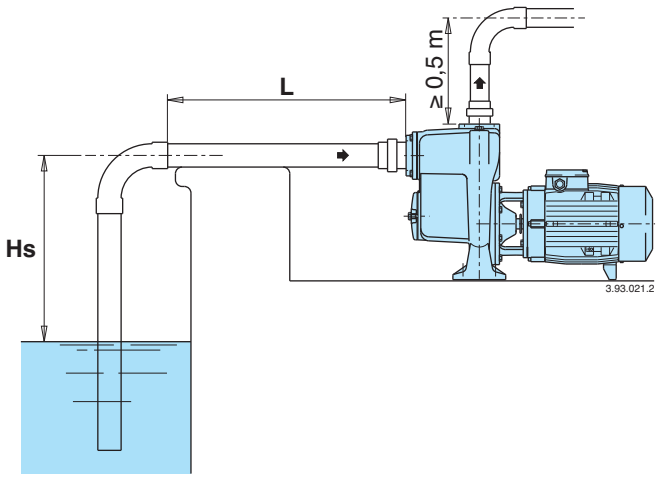

Hs (m) Suction lift.
L (m) Horizontal length of suction pipe above the water level.
t (min) Self-priming time.

CALPEDA ROMANIA - INFINITY PUMPS SRL
Tel: 0268.33.47.47 / 0722.244.944
vanzari@calpeda.ro | www.calpeda.ro

A

Self-Priming Centrifugal Pumps
with open impeller

Characteristic curves n ≈ 2900 rpm

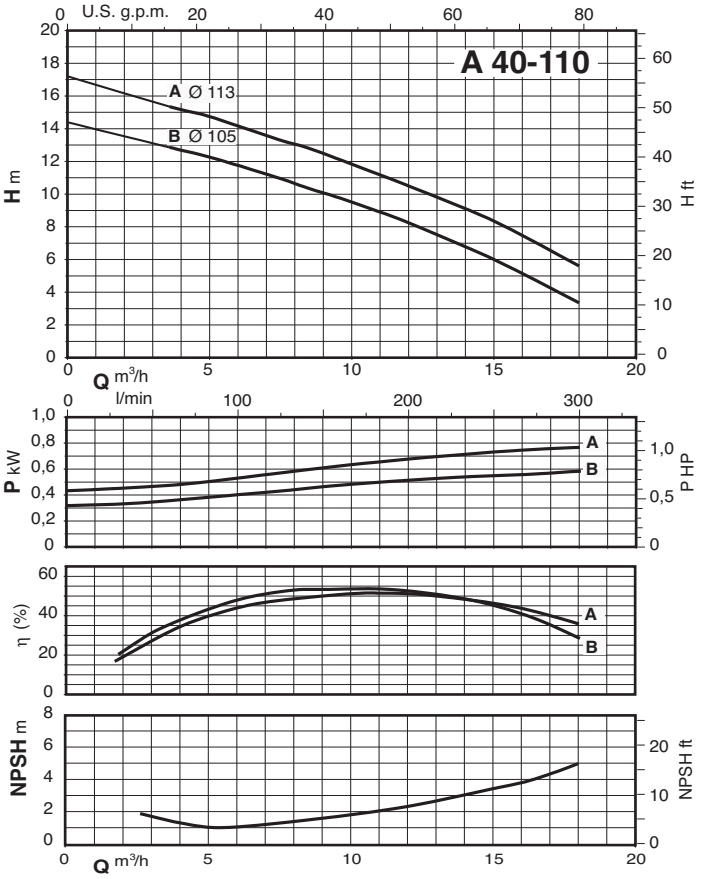

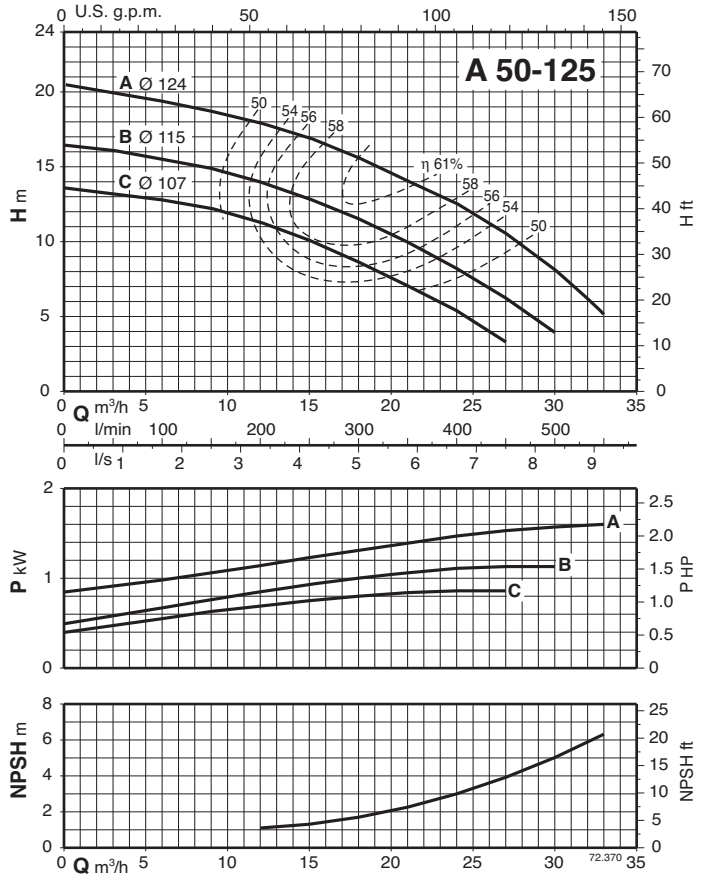

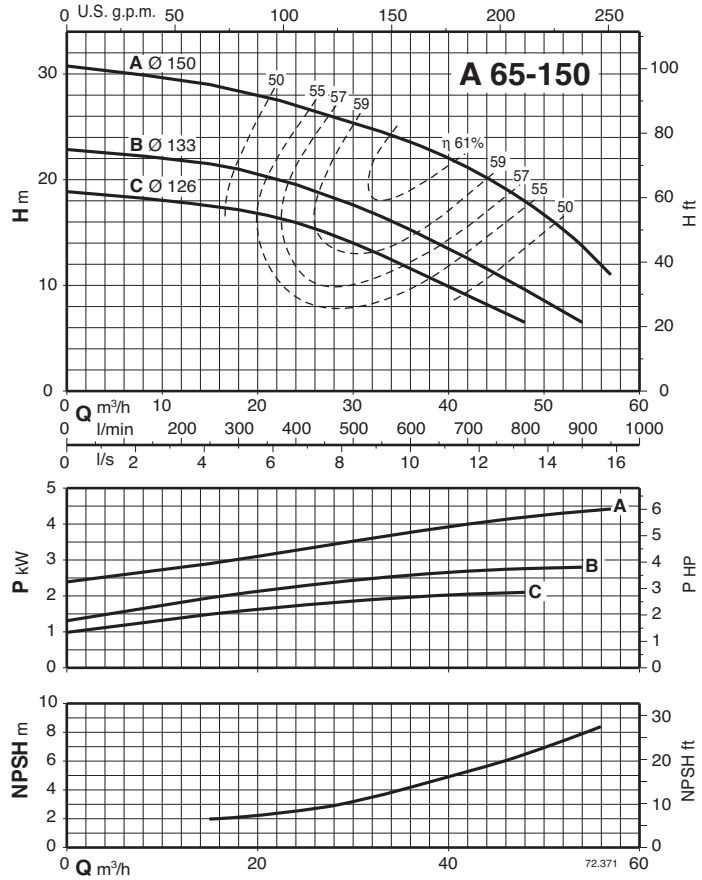

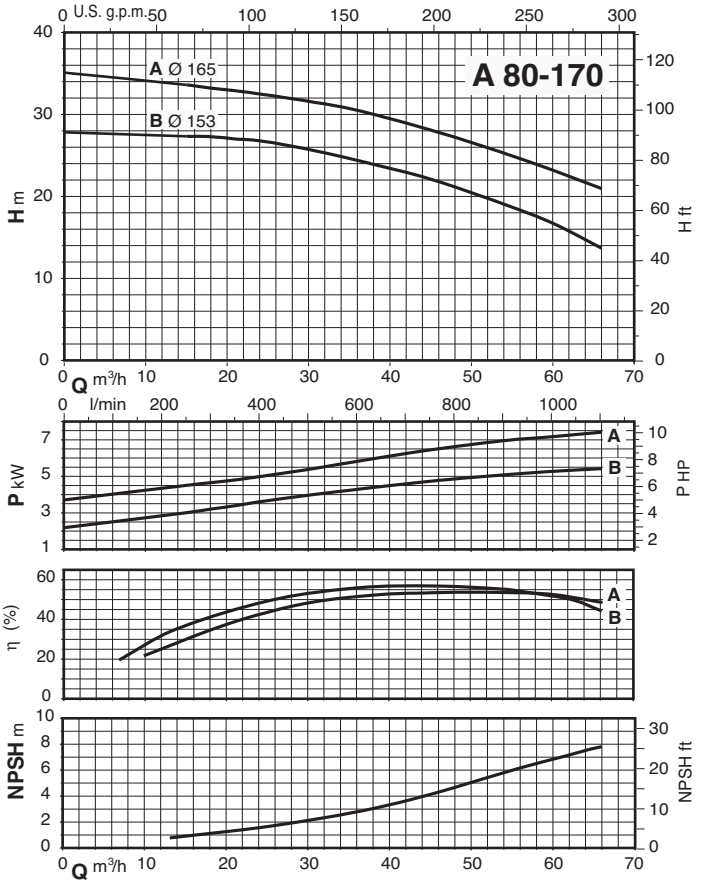

CALPEDA ROMANIA - INFINITY PUMPS SRL
Tel: 0268.33.47.47 / 0722.244.944
vanzari@calpeda.ro | www.calpeda.ro

Dimensions and weights

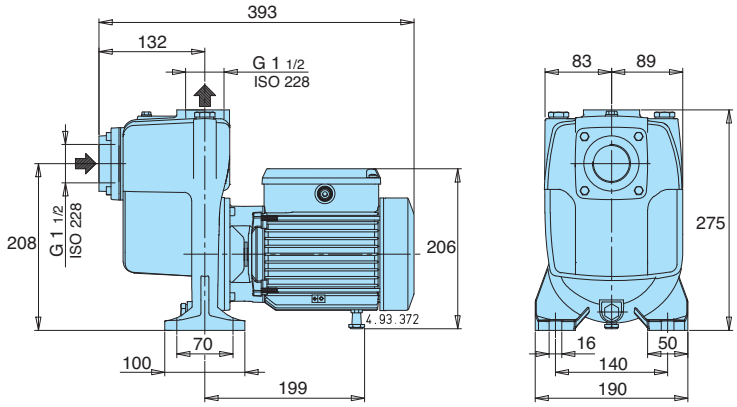

	kg
A 40-110A/B AM 40-110A/A	20,6 20,8
A 40-110B/A AM 40-110B/A	18,9 19,8
B-A 40-110A/B B-AM 40-110A/A	23,3 23,5
B-A 40-110B/A B-AM 40-110B/A	21,6 22,5

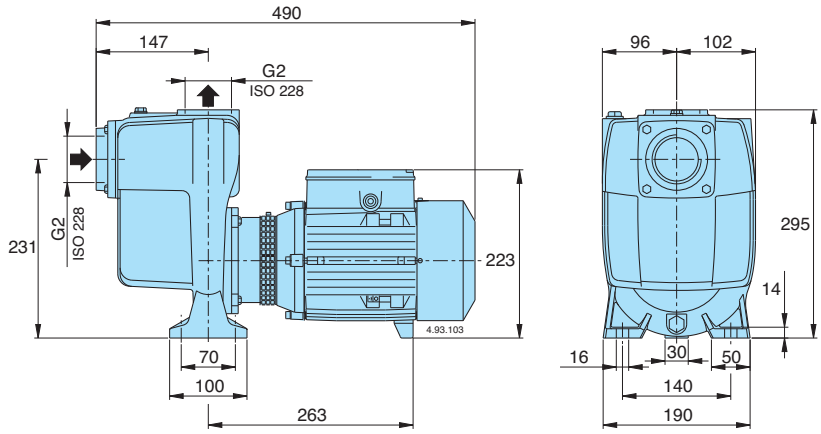

	kg
A 50-125A/A AM 50-125AE	29,9 31
A 50-125B/A AM 50-125BE	28 29,1
A 50-125CE AM 50-125CE	26,9 27,8
B-A 50-125A/A B-AM 50-125AE	33,6 33,6
B-A 50-125B/A B-AM 50-125BE	31 32,6
B-A 50-125CE B-AM 50-125CE	29,6 30,6

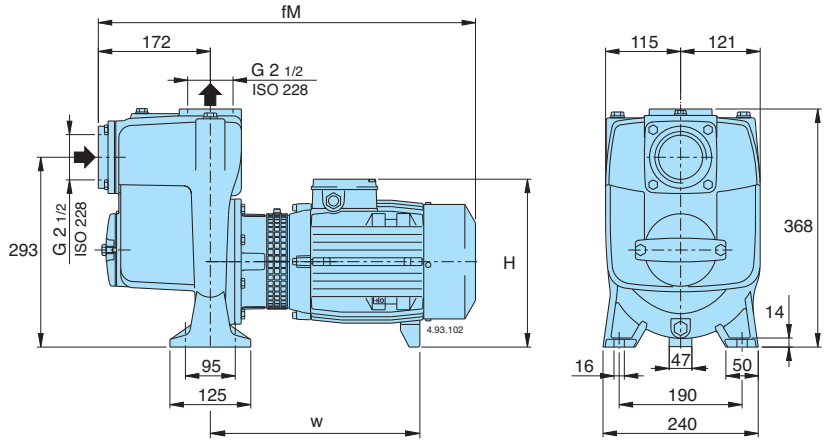

TYPE	mm			kg
	fM	H	w	
A 65-150C/C B-A 65-150C/B	595 583	270 260	324 319	56,7 50,4
A 65-150B/B B-A 65-150B/A	595	270	324	57 58,5
A 65-150A/C B-A 65-150A/B	595	270	324	58,5 60

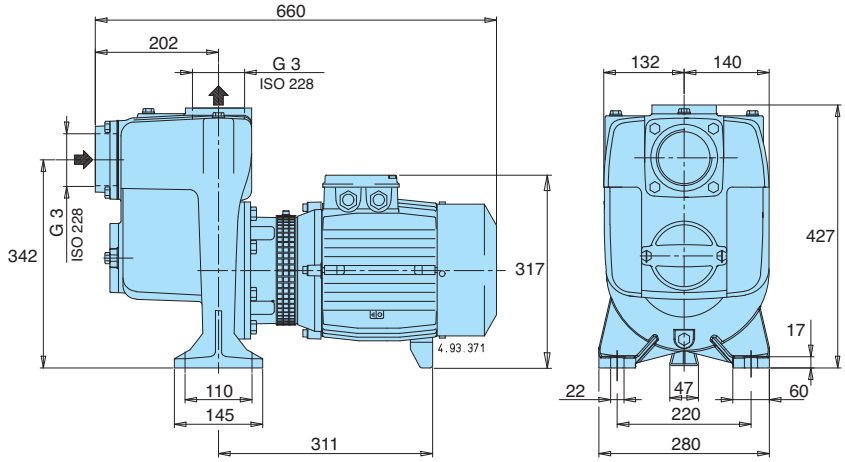

	kg
A 80-170A/A	85,8
A 80-170B/A	80,3
B-A 80-170A/A	95,6
B-A 80-170B/A	90,1

CALPEDA ROMANIA - INFINITY PUMPS SRL
Tel: 0268.33.47.47 / 0722.244.944
vanzari@calpeda.ro | www.calpeda.ro

Self-Priming Centrifugal Pumps
with open impeller

Features

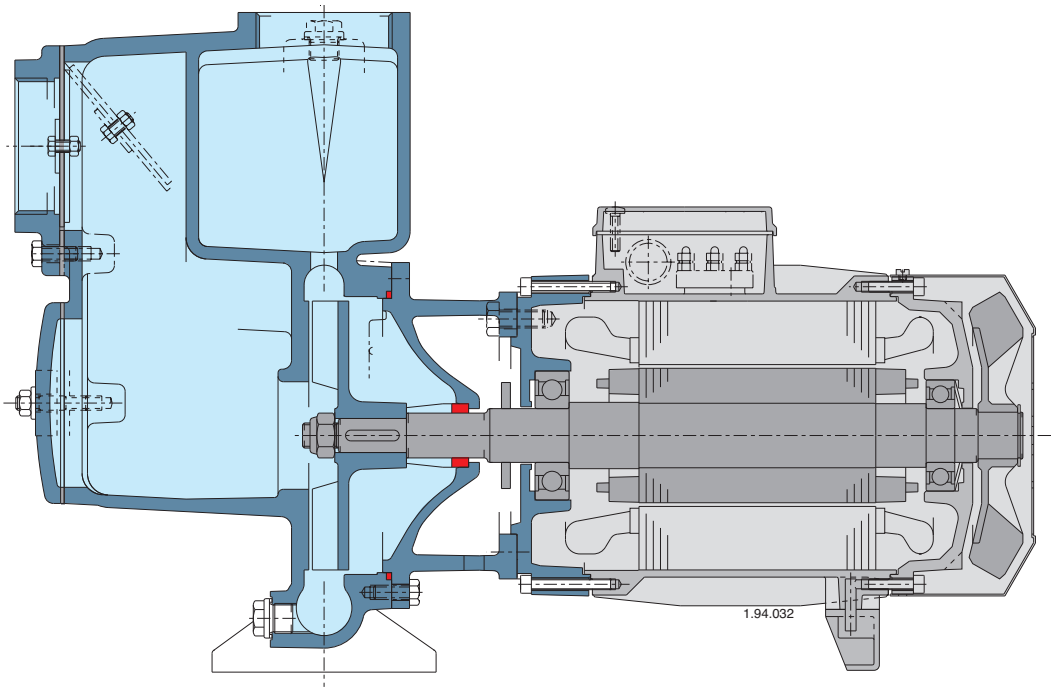

Fast self priming
An integrated non-return valve and the design of the pump casing ensures rapid priming, once the pump body has been filled with water.

Flexible
The option to choose between cast iron and bronze materias for the hydraulic parts in contact with the pumped liquid allows A series pumps to be selected for use with different types of liquids.

Solid parts
The open impeller allows for the passage of suspended solids in pumped liquid.

Exclusive design
An innovative, patented guard prevents contact with rotating parts, proving protection to the end user whilst allowing for inspection of the mechanical seal.

Reliable
The bearing and shaft are designed to ensure the reduction of the stress, providing high reliability under all operating conditions.

CALPEDA ROMANIA - INFINITY PUMPS SRL
Tel: 0268.33.47.47 / 0722.244.944
vanzari@calpeda.ro | www.calpeda.ro

C Centrifugal Pumps
with open impeller

Construction
Close-coupled centrifugal pumps with open impeller.
Free-flow impeller (vortex or recessed impeller) for type C 16/1E.

C: version with pump casing and lantern bracket in cast iron.
B-C: version with pump casing and lantern bracket in bronze (the pumps are supplied fully painted).

Applications
For moderately dirty liquids or emulsions.
For industry and agriculture.

Operating conditions
Liquid temperature from -10 °C to +90 °C.
Ambient temperature up to 40 °C.
Total suction lift up to 8 m.
Maximum permissible working pressure: 6 bar.
Maximum size of solids: 4 mm.
Continuous duty.

Motor
2-pole induction motor, 50 Hz (n ≈ 2900 rpm).
C: three-phase 230/400 V ± 10%.
CM: single-phase 230 V ± 10%, with thermal protector. Capacitor inside the terminal box.
Insulation class F.
Protection IP 54.
Motor suitable for operation with frequency converter from 1,1 kW.
Classification scheme IE3 for three-phase motors from 0,75 kW.
Constructed in accordance with: EN 60034-1; EN 60034-30-1. EN 60335-1, EN 60335-2-41.

Materials

Component	C	B-C
Pump casing	Cast iron GJL 200 EN 1561	Bronze G-Cu Sn 10 EN 1982
Lantern bracket	Cast iron GJL 200 EN 1561	Bronze G-Cu Sn 10 EN 1982
Impeller	Brass P- Cu Zn 40 Pb 2 UNI 5705	
Shaft	Chrome steel 1.4104 EN 10088 (AISI 430)	Cr-Ni-Mo steel 1.4401 EN 10088 (AISI 316)
	Chrome-nickel steel 1.4305 EN 10088 (AISI 303) for C 41	
Mechanical seal	Carbon - Ceramic - NBR	

Special features on request
- Other voltages.
- Frequency 60 Hz (as per 60 Hz data sheet).
- Protection IP 55.
- Special mechanical seal
- Higher or lower liquid or ambient temperatures.
- Motor suitable for operation with frequency converter up to 0,75 kW.
- Construction with bearing bracket.

Coverage chart n ≈ 2900 rpm

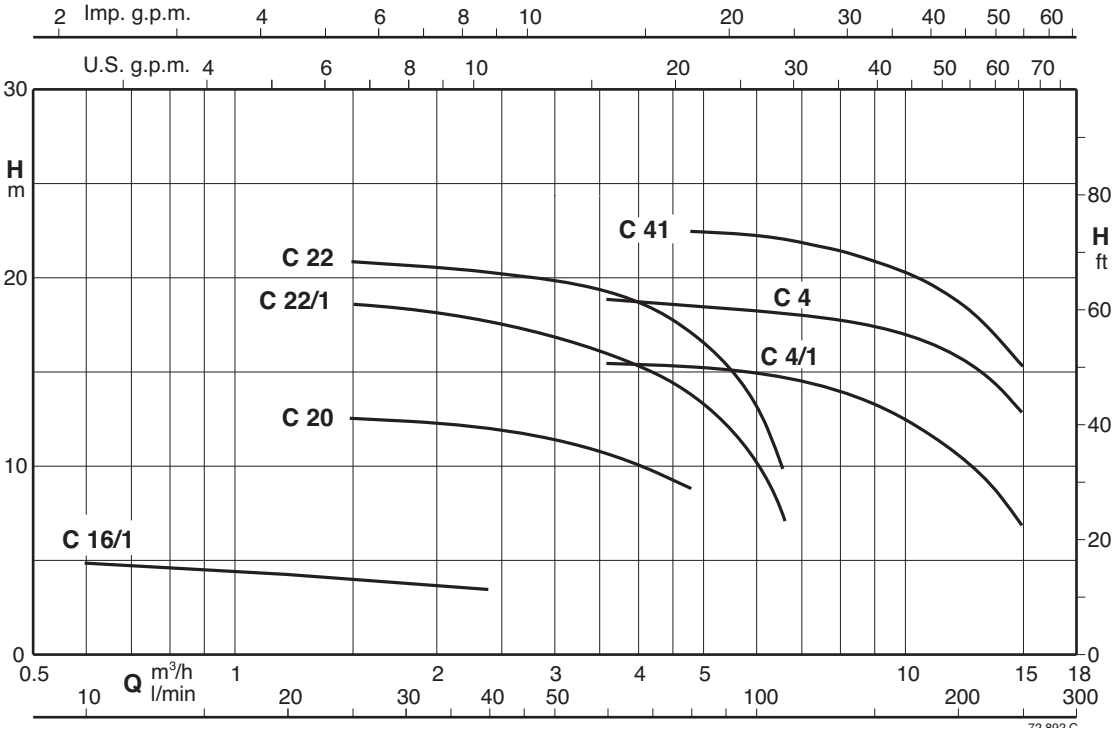

CALPEDA ROMANIA - INFINITY PUMPS SRL
Tel: 0268.33.47.47 / 0722.244.944
vanzari@calpeda.ro | www.calpeda.ro

C Centrifugal Pumps
with open impeller

Performance n ≈ 2900 rpm

3 ~	230V	400V	1 ~	230V	P_1	P_2		**Q** m³/h	0,6	0,9	1,2	1,5	1,8	2,4	3	3,6	4,8	6	6,6	8,4	9,6	10,8	12	13,2	15
	A	A		A	kW	kW	HP	l/min	10	15	20	25	30	40	50	60	80	100	110	140	160	180	200	220	250
C 16/1E B- C 16/1E	1,7	1	**CM 16/1E** B- CM 16/1E	1,2	0,16	0,15	0,2	**H** m	5	4,7	4,4	4,2	4	3,6											
C 20E B- C 20/A	1,9 2,3	1,1 1,3	**CM 20E** B- CM 20/A	2,5 2,8	0,4	0,37	0,5					12,3	12,2	12	11,5	10,8	9								
C 22/1E B- C 22/1/A	2,4 2,3	1,4 1,3	**CM 22/1E** B- CM 22/1/A	3 3,6	0,8	0,45	0,6					18	18	17,5	17	16	14	10	7,5						
C 22E B- C 22/A	3	1,7	**CM 22E** B- CM 22/A	3,5 4,5	0,9	0,55	0,75					20,5	20	20	19	18,5	16,5	14	12						
C 4/1/A	3	1,7	**CM 4/1/A**	4,5	0,91	0,55	0,75									15,6	15,4	15,2	15	14	13,1	12	10,8	9,5	7
C 4/B B- C 41/1E	3,7 3,3	2,2 1,9	**CM 4/A** B- CM 41/1E	5,7 5,8	1,2	0,75	1									19	18,8	18,5	18,3	17,7	17,4	16,8	16	15	13
C 41/A B- C 41/A	4,7	2,7	**CM 41E** B- CM 41E	7,4	1,6	1,1	1,5										22,4	22,3	22,2	21,5	21	20,5	19,5	18	15,5

P_1 Maximum power input. B-C, B-CM = Bronze construction. ρ = Density 1000 kg/m³. Tolerances according to UNI EN ISO 9906:2012

P_2 Rated motor power output. **H** Total head in m. υ = Kinematic viscosity max 20 mm²/sec.

CALPEDA ROMANIA - INFINITY PUMPS SRL
Tel: 0268.33.47.47 / 0722.244.944
vanzari@calpeda.ro | www.calpeda.ro

Dimensions and weights

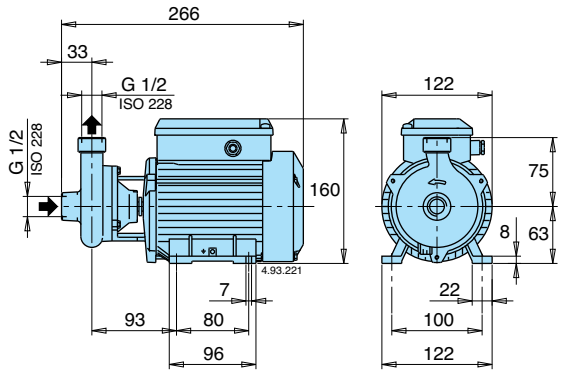

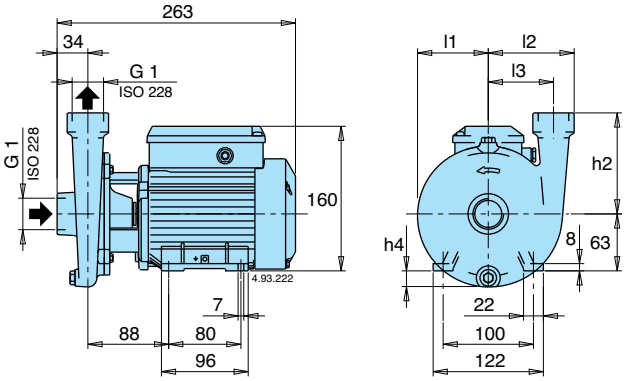

TYPE	kg
C 16/1E	5,2
CM 16/1E	5,2

TYPE	kg
B-C 16/1E	5,6
B-CM 16/1E	5,6

TYPE	mm					kg	
	h2	h4	l1	l2	l3	**C**	**CM**
C 20E	90	5	67	82	60	6,8	6,8
C 22/1E - C 22E	110	17	77	94	71	8 - 8,3	8 - 8,3

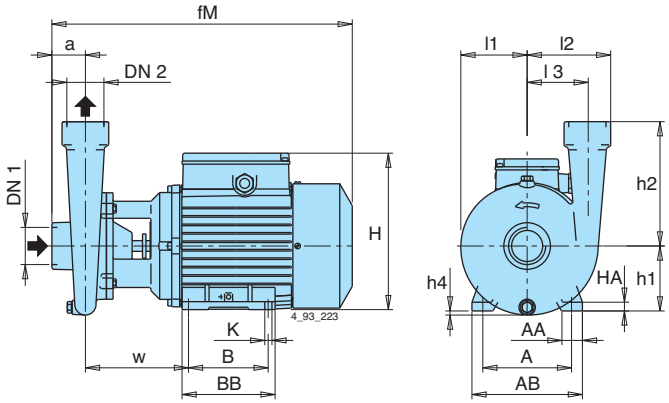

TYPE		DN1	DN2	mm																kg			
		ISO 228		a	fM	h1	h2	H	h4	BB	B	AB	A	AA	K	l1	l2	l3	w	HA	**C**	**CM**	**B-C**	**B-CM**
–	**B-C 20/A**	G 1	G 1	35	303	71	90	182	-	106	90	134	112	22	7	70	84	60	105	10	-	-	9,1	9,1
– –	**B-C 22/1/A** **B-C 22/A**	G 1	G 1	35	303	71	110	182	9	106	90	134	112	22	7	81	93	71	106	10	-	-	9,3 9,6	10,3 10,6
C 4/1/A – **C 4/B** –		G 1 1/2	G 1 1/2	43	304	71	160	182	18	106	90	134	112	22	7	85	108	78	100	10	10,8 12,6	11,8 12,8	- -	- -
– **C 41/A**	**B-C 41/1E** **B-C 41/A**	G 1 1/2	G 1 1/2	43	380	80	160	208	9	125	100	155	125	30	9,5	85	108	78	132	10	- 18,5	- 19,3	16,3 19,2	17,9 20,1

CALPEDA ROMANIA - INFINITY PUMPS SRL
Tel: 0268.33.47.47 / 0722.244.944
vanzari@calpeda.ro | www.calpeda.ro

Characteristic curves n ≈ 2900 rpm

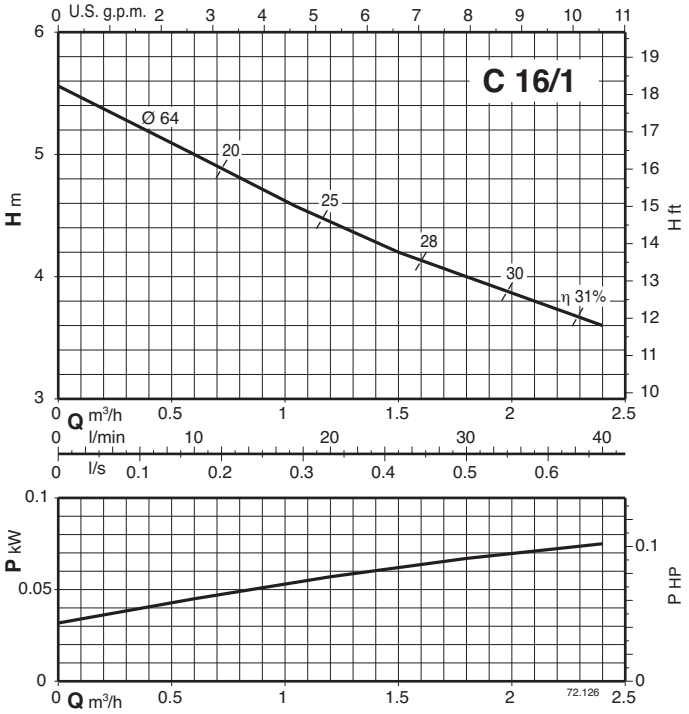

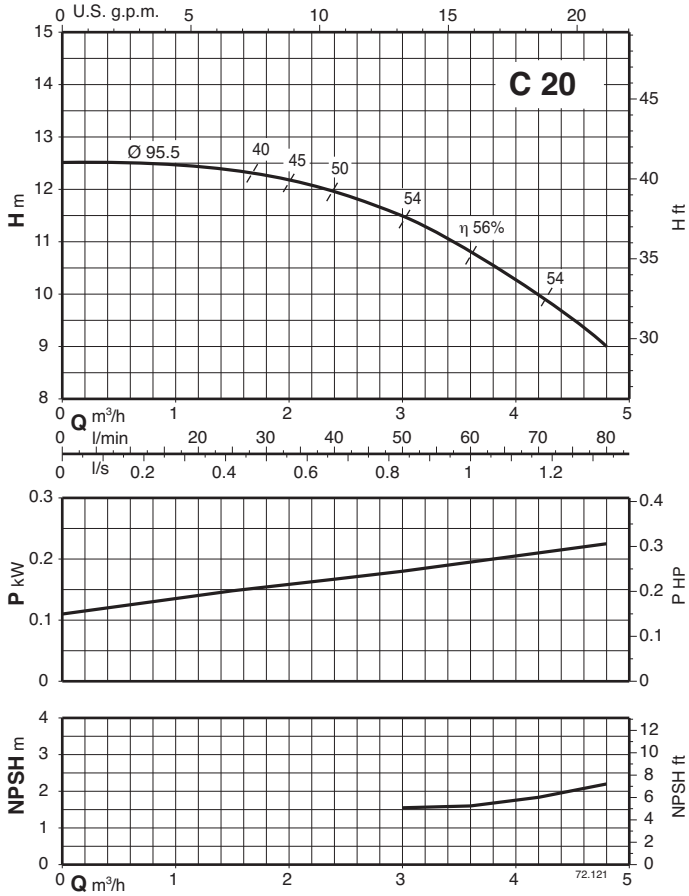

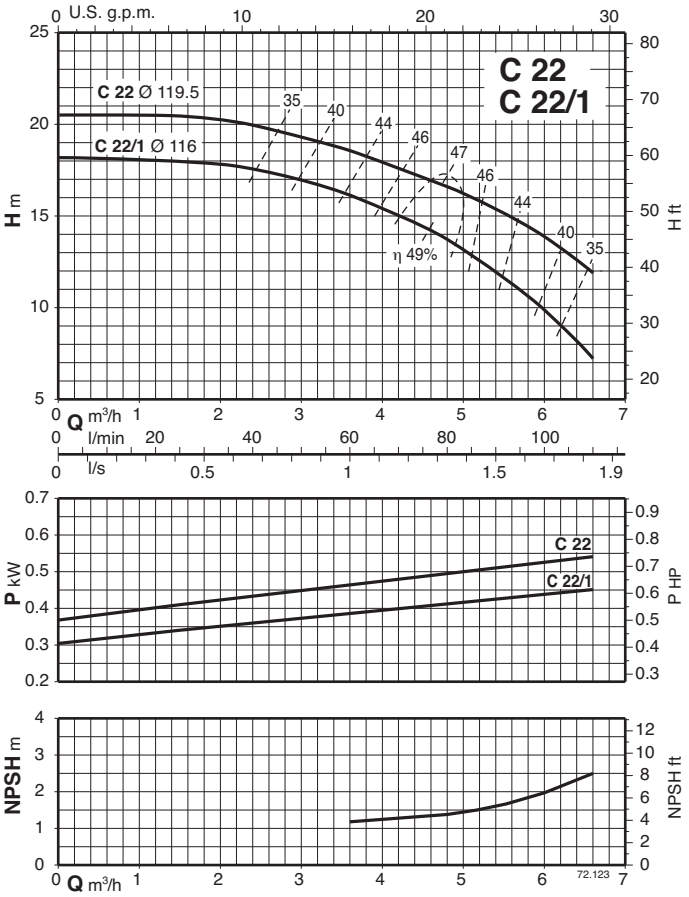

CALPEDA ROMANIA - INFINITY PUMPS SRL
Tel: 0268.33.47.47 / 0722.244.944
vanzari@calpeda.ro | www.calpeda.ro

Characteristic curves n ≈ 2900 rpm

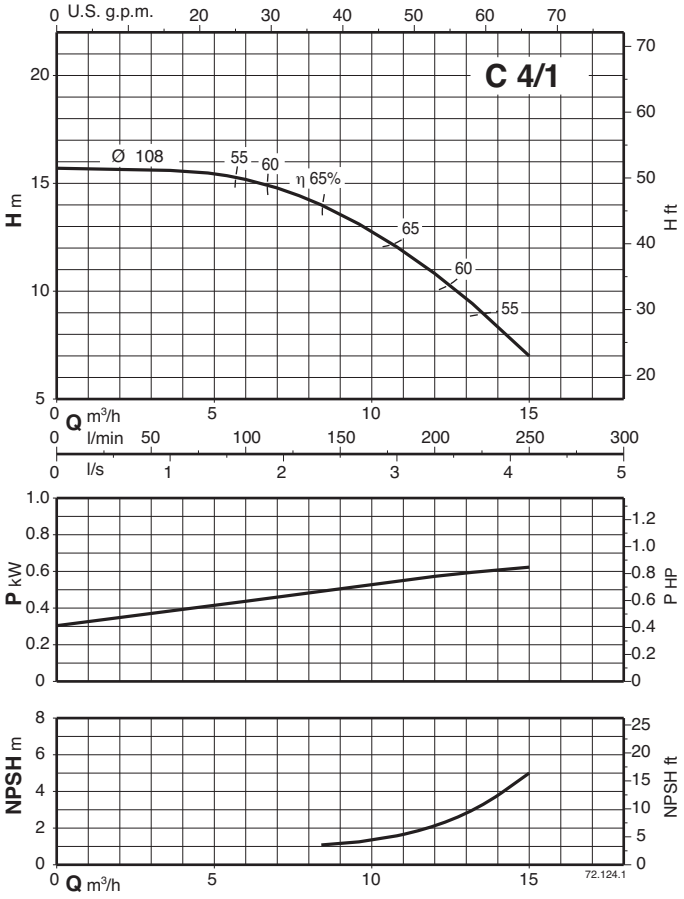

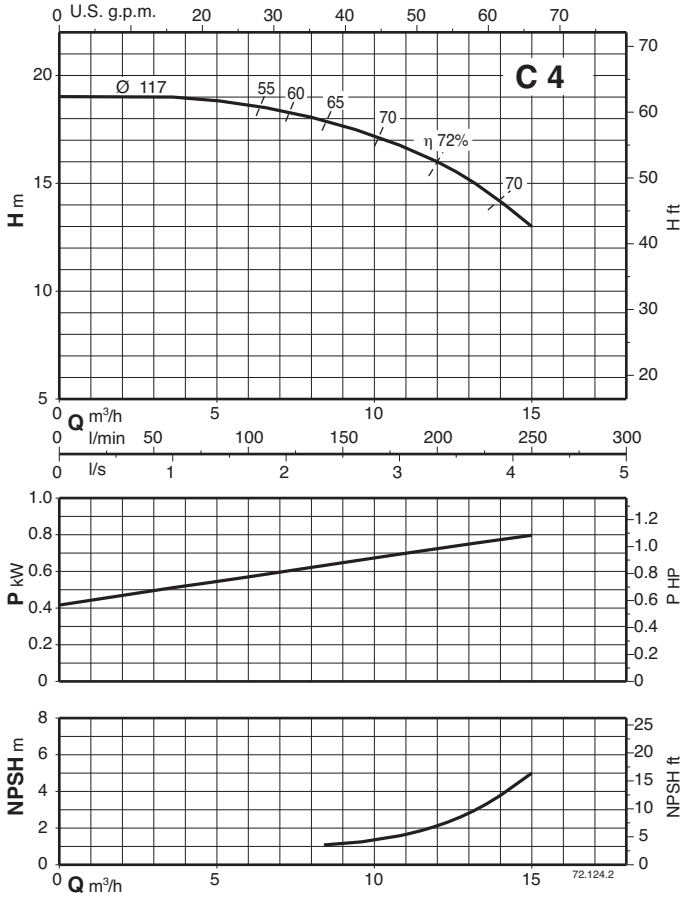

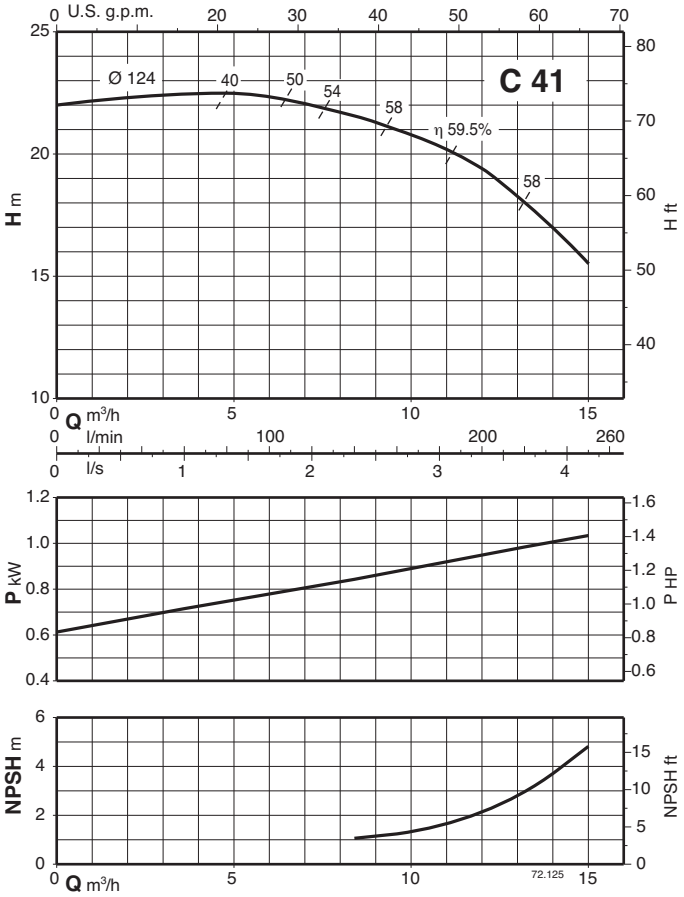

CALPEDA ROMANIA - INFINITY PUMPS SRL
Tel: 0268.33.47.47 / 0722.244.944
vanzari@calpeda.ro | www.calpeda.ro

Features

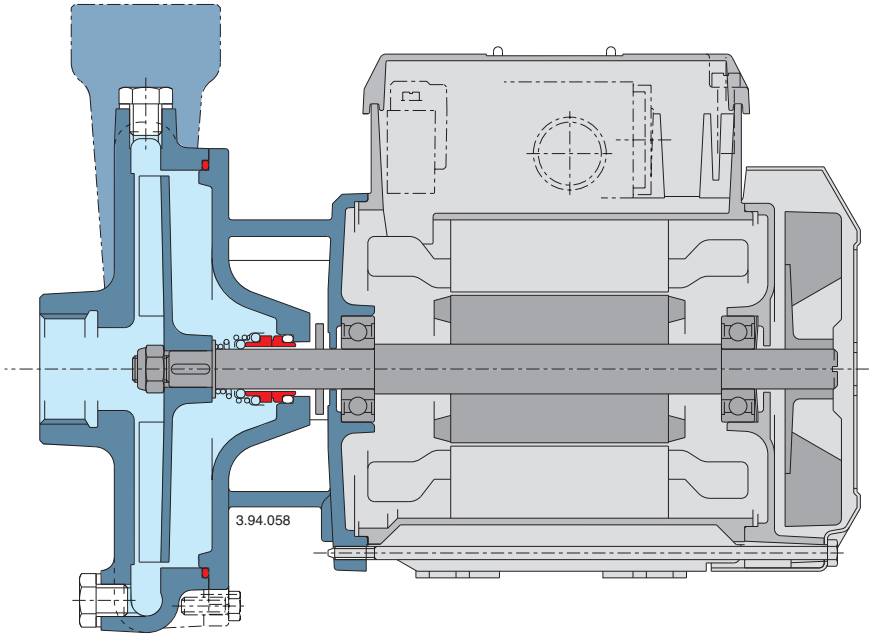

Flexible
The option to choose between cast iron and bronze materias for the hydraulic parts in contact with the pumped liquid allows C series pumps to be selected for use with different types of liquids.

Solid parts
The open impeller allows for the passage of suspended solids in pumped liquid.

Reliable
The bearing and shaft are designed to ensure the reduction of the stress, providing high reliability under all operating conditions.

CALPEDA ROMANIA - INFINITY PUMPS SRL
Tel: 0268.33.47.47 / 0722.244.944
vanzari@calpeda.ro | www.calpeda.ro

CT 61

Peripheral Pump

Construction

Close-coupled peripheral pump (regenerative pump) with turbine impeller. Compact, patented construction with single-piece motor casing and pump-side wall.
Protected against water entering the motor from outside.

CT: version with pump casing in cast iron.
B-CT: version with pump casing in bronze
(the pumps are supplied fully painted).

Applications

For clean liquids without abrasives, without suspended solids, non-explosive, non-aggressive for the pump materials.
For increasing network pressure (follow local specifications).
For the reduced dimensions, these pumps are very well suitable to be mounted in cooling and air-conditioning machines and equipments, circulation.

Operating conditions

Liquid temperature up to 60 °C.
Ambient temperature up to 40 °C.
Total suction lift up to 7 m.
Continuous duty.

Motor

2-pole induction motor, 50 Hz (n ≈ 2900 rpm).

CT 61: three-phase 230/400 V ± 10%.
CTM 61: single-phase 230 V ± 10%, with thermal protector. Capacitor inside the terminal box.

Insulation class F.
Protection IP 54.
Constructed in accordance with: EN 60034-1; EN 60335-1, EN 60335-2-41.

Special features on request

- Other voltages.
- Frequency 60 Hz (as per 60 Hz data sheet).
- Special mechanical seal.

Materials

Components	CT 61	B-CT 61
Pump casing	Cast iron GJL 200 EN 1561	Bronze G-Cu Sn 10 EN 1982
Casing cover motor side	Brass P- Cu Zn Pb 2 UNI 5705	
Impeller	Brass P- Cu Zn Pb 2 UNI 5705	
Shaft	Chrome steel 1.4104 EN 10088 (AISI 430)	
Mechanical seal	Carbon - Ceramic - NBR	

Coverage chart n ≈ 2900 rpm

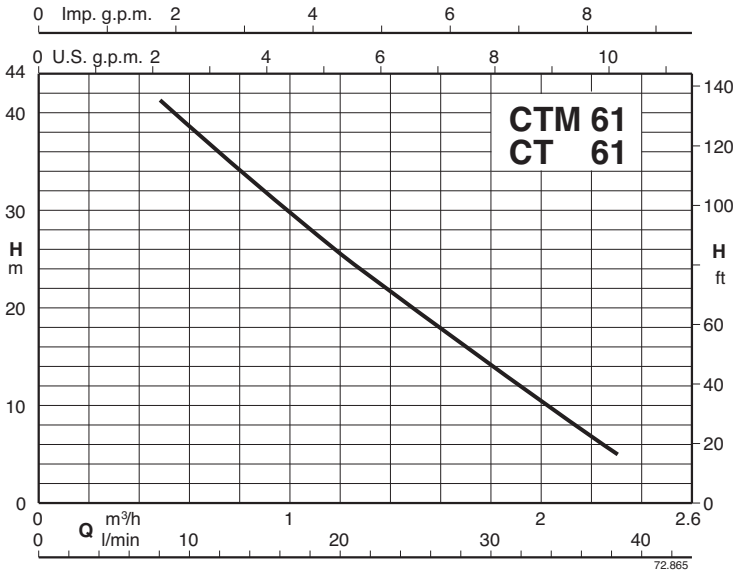

CALPEDA ROMANIA - INFINITY PUMPS SRL
Tel: 0268.33.47.47 / 0722.244.944
vanzari@calpeda.ro | www.calpeda.ro

CT 61

Peripheral Pump

Performance n ≈ 2900 rpm

3~	230V	400V	1~	230V	P2		Q m³/h	0,48	0,6	0,75	0,96	1,2	1,5	1,89	2,3
	A	A		A	kW	HP	l/min	8	10	12,5	16	20	25	31,5	38
CT 61/A **B-CT 61/A**	1,9	1,1	**CTM 61/A** **B-CTM 61/A**	2,5	0,33	0,45	**H** m	41	38,5	35,5	31	25,5	19	11	3

H Total head in m. P2 Rated motor power output.

Dimensions and weights

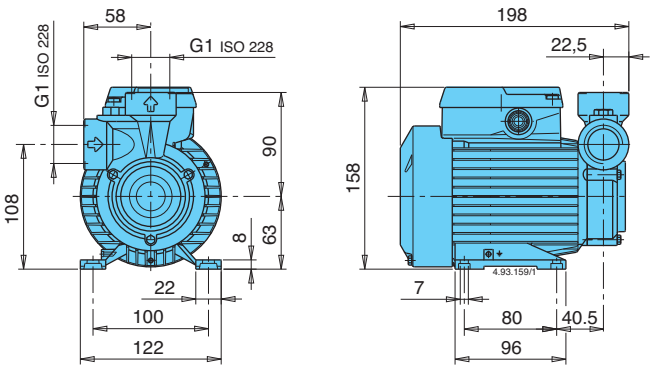

CT	61/A	**4,9**	kg
CTM	61/A	**5**	kg
B-CT	61/A	**5,1**	kg
B-CTM	61/A	**5,2**	kg

Features

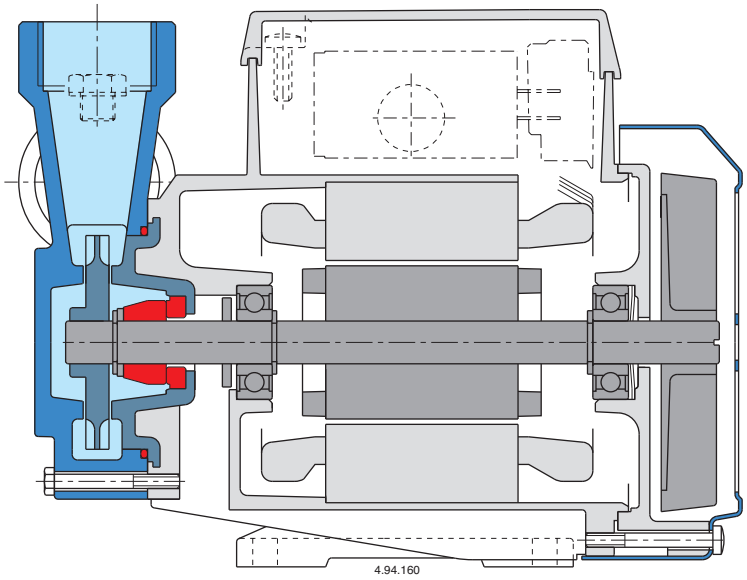

Patented

CALPEDA ROMANIA - INFINITY PUMPS SRL
Tel: 0268.33.47.47 / 0722.244.944
vanzari@calpeda.ro | www.calpeda.ro

CT 60 Peripheral Pump

Construction

Close-coupled peripheral pump (regenerative pump) with turbine impeller.
Compact, patented construction with single-piece motor casing and pump-side wall.
Protected against water entering the motor from outside.

Applications

For clean liquids without abrasives, without suspended solids, non-explosive, non-aggressive for the pump materials.
For increasing network pressure (follow local specifications).
For the reduced dimensions, these pumps are very well suitable to be mounted in cooling and air-conditioning machines and equipments, circulation.

Operating conditions

Liquid temperature up to 60 °C.
Ambient temperature up to 40 °C.
Total suction lift up to 7 m.
Continuous duty.

Motor

2-pole induction motor, 50 Hz (n ≈ 2900 rpm).

CT 60: three-phase 230/400 V ± 10%.
CTM 60: single-phase 230 V ± 10%, with thermal protector. Capacitor inside the terminal box.

Insulation class F.
Protection IP 54.
Constructed in accordance with: EN 60034-1; EN 60335-1, EN 60335-2-41.

Materials

Components	**Materials**
Pump casing	Cast iron GJL 200 EN 1561
Casing cover motor side	Brass P- Cu Zn Pb 2 UNI 5705
Impeller	Brass P- Cu Zn Pb 2 UNI 5705
Shaft	Chrome steel 1.4104 EN 10088 (AISI 430)
Mechanical seal	Carbon - Ceramic - NBR

Special features on request

- Other voltages.
- Frequency 60 Hz (as per 60 Hz data sheet).
- Special mechanical seal.

Coverage chart n ≈ 2900 rpm

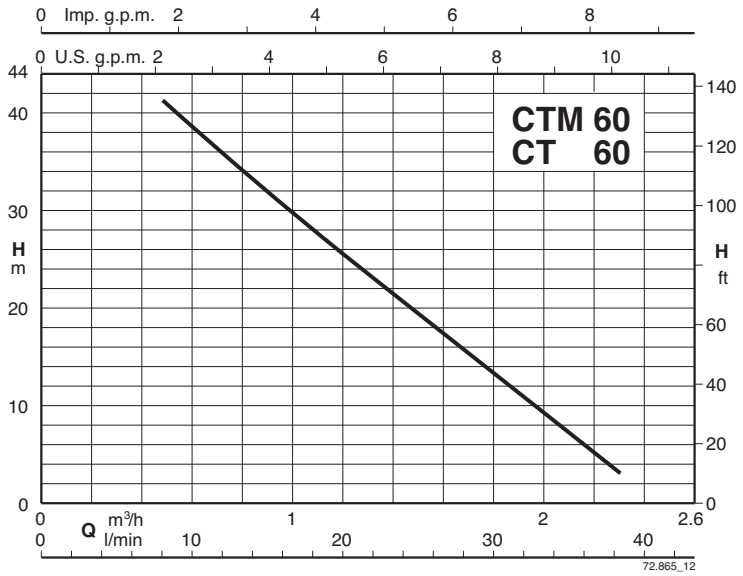

CALPEDA ROMANIA - INFINITY PUMPS SRL
Tel: 0268.33.47.47 / 0722.244.944
vanzari@calpeda.ro | www.calpeda.ro

CT 60 Peripheral Pump

Performance n ≈ 2900 rpm

3~	230V	400V	1~	230V	P2		Q m³/h	0,48	0,6	0,75	0,96	1,2	1,5	1,89	2,3
	A	A		A	kW	HP	l/min	8	10	12,5	16	20	25	31,5	38
CT 60/A	1,9	1,1	**CTM 60/A**	2,5	0,33	0,45	**H** m	41	38,5	35,5	31	25,5	19	11	3

H Total head in m. P2 Rated motor power output.

Dimensions and weights

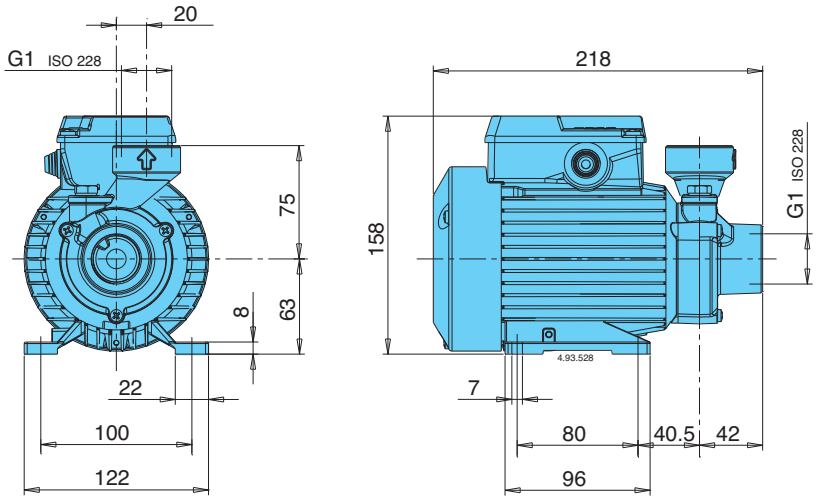

CT 60/A **4,9** kg
CTM 60/A **5** kg

Features

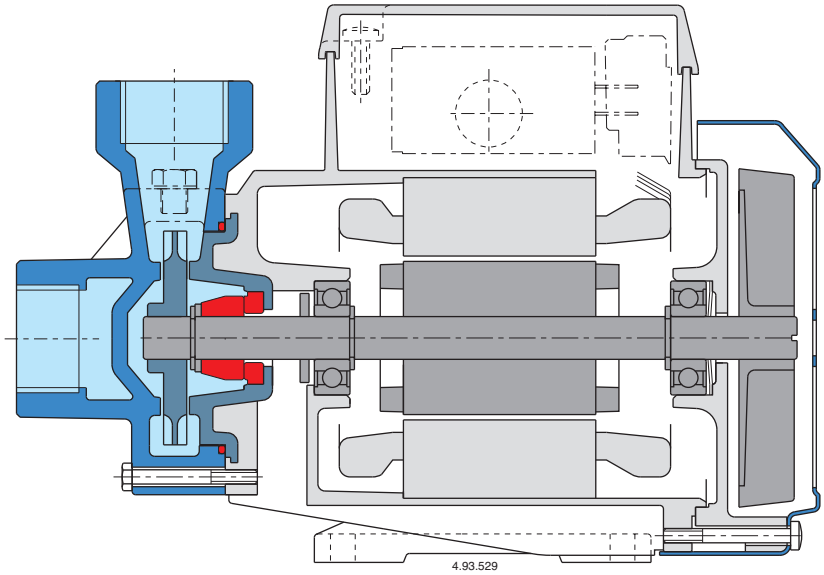

Patented

CALPEDA ROMANIA - INFINITY PUMPS SRL
Tel: 0268.33.47.47 / 0722.244.944
vanzari@calpeda.ro | www.calpeda.ro

T, TP

Peripheral Pumps

Construction

Close-coupled peripheral pumps (regenerative pumps) with turbine impeller.
T, TP: version with pump casing and lantern bracket in cast iron.
B-T, B-TP: version with pump casing and lantern bracket in bronze (the pumps are supplied fully painted).

Applications

For clean liquids without abrasives, without suspended solids, non-explosive, non-aggressive for the pump materials.
For increasing network pressure (follow local specifications).
For the reduced dimensions, these pumps are very well suitable to be mounted in cooling and air-conditioning machines and equipments, circulation, boiler feed.

Operating conditions

Liquid temperature from -10 °C to +90 °C.
Ambient temperature up to 40 °C.
Total suction lift up to 7 m.
Continuous duty.

Motor

2-pole induction motor, 50 Hz (n ≈ 2900 rpm).

T, TP: three-phase 230/400 V ± 10% up to 3 kW;
400/690 V ± 10% from 4 to 7,5 kW;

TM, TPM: single-phase 230 V ± 10% with thermal protector.
Capacitor inside the terminal box.

Insulation class F.
Protection IP 54.
Classification scheme IE3 for three-phase motors from 0,75 kW.
Constructed in accordance with: EN 60034-1; EN 60034-30-1.
EN 60335-1, EN 60335-2-41.

Materials

Components	T, TP	B-T, B-TP
Pump casing Lantern bracket	Cast iron GJL 200 EN 1561	Bronze G-Cu Sn 10 EN 1982
Casing cover	Cast iron GJL 200 EN 1561	Bronze G-Cu Sn 10 EN 1982
	Brass P- Cu Zn Pb 40 2 UNI 5705 for T 61-65-70, B-T 61-70	
Impeller	Brass P- Cu Zn 40 Pb 2 UNI 5705 Bronze G-Cu Sn 10 EN 1982 for T 125, TP 132-132R	
Shaft	Cr-Ni steel AISI 303 T 76, Tp 80-100	Cr-Ni-Mo steel AISI 316
	Chrome steel AISI 430 T 61-65-70-100-125, Tp 78-132-132R	
Mechanical seal	Carbon - Ceramic - NBR	

Special features on request

- Other voltages.
- Frequency 60 Hz (as per 60 Hz data sheet).
- Protection IP 55.
- Special mechanical seal.
- Higher or lower liquid or ambient temperatures.
- Construction with bearing bracket.

Coverage chart n ≈ 2900 rpm

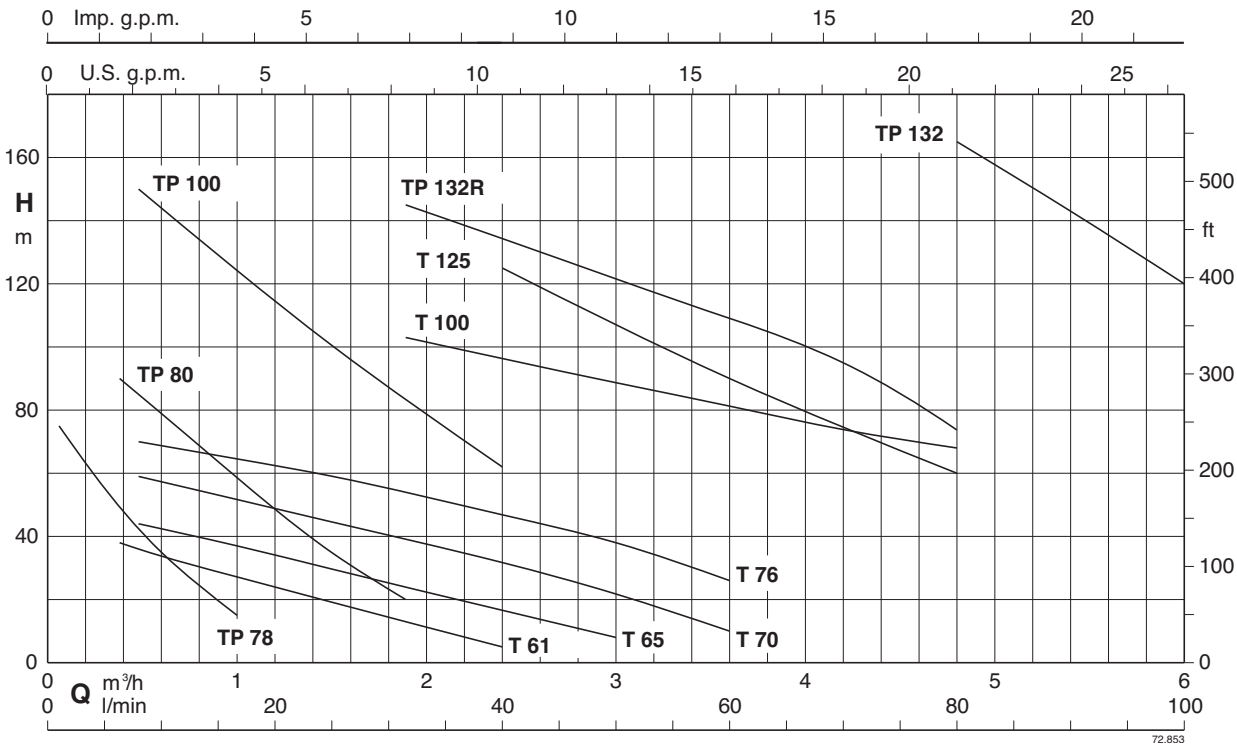

CALPEDA ROMANIA - INFINITY PUMPS SRL
Tel: 0268.33.47.47 / 0722.244.944
vanzari@calpeda.ro | www.calpeda.ro

T, TP

Peripheral Pumps

Performance n ≈ 2900 rpm

3 ~	230V	400V	1 ~	230V	P1	P2		Q m³/h	0,06	0,12	0,24	0,38	0,48	0,6	0,75	1	1,2	1,5	1,89	2,4	3	3,6	4,2	4,8	5,4	6
	A	A		A	kW	kW	HP	l/min	1	2	4	6,3	8	10	12,5	16	20	25	31,5	40	50	60	70	80	90	100
B-**T 61E**	1,9	1,1	B-**TM 61E**	2,5	0,55	0,33	0,45					38	36	34	31,5	28	24	19	12,5	5						
B-**T 65E**	2,8	1,6	B-**TM 65E**	3,5	0,8	0,45	0,6						44	42	40	37	33	29	24	16	8					
B-**T 70/B**	3,7	2,2	B-**TM 70/A**	6	1,3	0,75	1						59	57	55	51	48	43	38	30	22	10				
T 76/A	5,3	3	**TM 76E**	7,4	1,6	1,1	1,5						70	68	67	65	62	58	53	46	38	26				
T 100/A	11,5	6,6				3	4												103	97	89	82	75	68		
T 125/B		9,6				4	5,5	**H** m												125	110	90	75*	60*		
B-**TP 78/A**	2,3	1,3	B-**TPM 78/A**	2,8	0,6	0,37	0,5		75	70	60	50	42	35	25	15										
B-**TP 80E**	4	2,3	B-**TPM 80E**	5,8	1,2	0,75	1					90	85	79	73	61	48	34	20							
TP 100/B	9,6	5,5				2,2	3						150	144	136	125	115	100	84	62						
TP 132R/A		10,9				5,5	7,5												145	135	120	110	95	70		
TP 132/A		14,3				7,5	10																	165	143*	120*

P1 Maximum power input.
P2 Rated motor power output.

B-T, B-TM = Bronze construction.

H Total head in m.

* Maximum suction lift 2-3 m.

Dimensions and weights

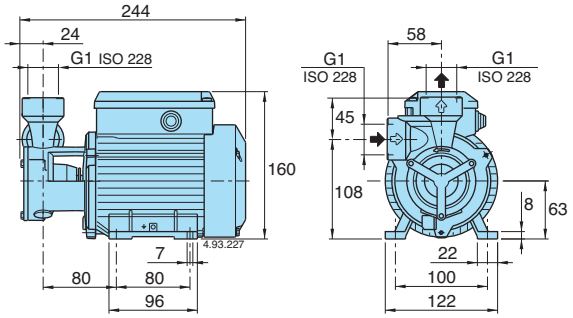

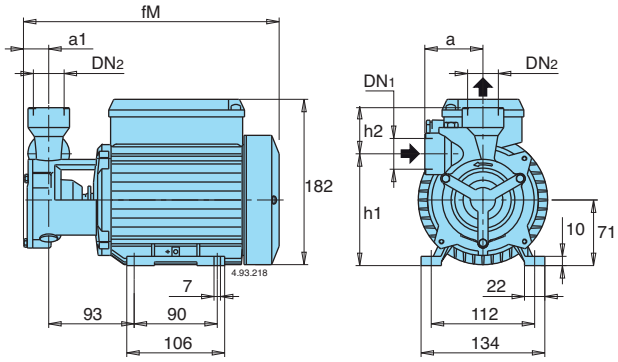

T 61E: kg 6,3
B- T 61E: kg 6,5

T 65E: kg 7,3
B- T 65E: kg 7,5

TYPE	DN1	DN2	mm					kg	
	ISO 228		a1	fM	h2	h1	a	**T**	**B-T**
T 70/B B-T 70/B	G 1	G 1	24	278	50	121	63	12	12,4
TP 78/A B-TP 78/A	G 1/2	G 1/2	22	276	24	127	56	8,2	8,8

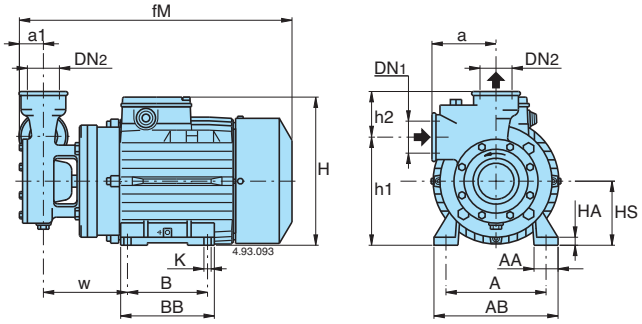

TYPE		DN1	DN2	mm															kg	
		ISO 228		a1	fM	HS	h2	h1	H	BB	B	AB	A	AA	K	a	w	HA	**T, TP**	**B-TP**
T 76/A	–	G 1¼	G 1¼	26	338	80	56	136	208	117	100	155	125	30	9	80	105	10	18,4	-
T 100/A	–	G 1¼	G 1¼	32	410	90	59	161	226	152	125	180	140	40	9,5	95	121	12	32,5	-
T 125/B	–	G 1¼	G 1¼	32	470	90	75	170	226	152	125	180	140	40	9,5	90	195	12	39,5	-
TP 80E	**B-TP 80E**	G ¾	G ¾	27	332	80	35	135	208	117	100	155	125	30	9	60	104	10	16,4	16,8
TP 100/B	–	G ¾	G ¾	27	387	80	38	142	208	117	100	155	125	30	9	65	113	10	23,2	-
TP 132R/A **TP 132/A**	– –	G 1¼	G 1¼	42	485	112	70	202	272	180	140	230	190	50	11,5	100	183	14	53,6 58,5	- -

CALPEDA ROMANIA - INFINITY PUMPS SRL
Tel: 0268.33.47.47 / 0722.244.944
vanzari@calpeda.ro | www.calpeda.ro

T, TP

Peripheral Pumps

Characteristic curves n ≈ 2900 rpm

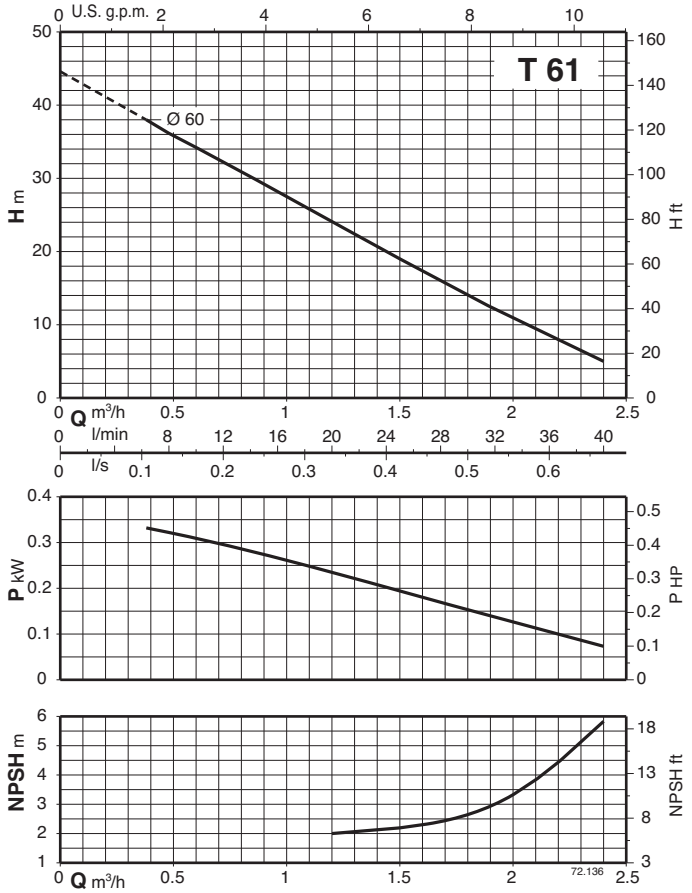

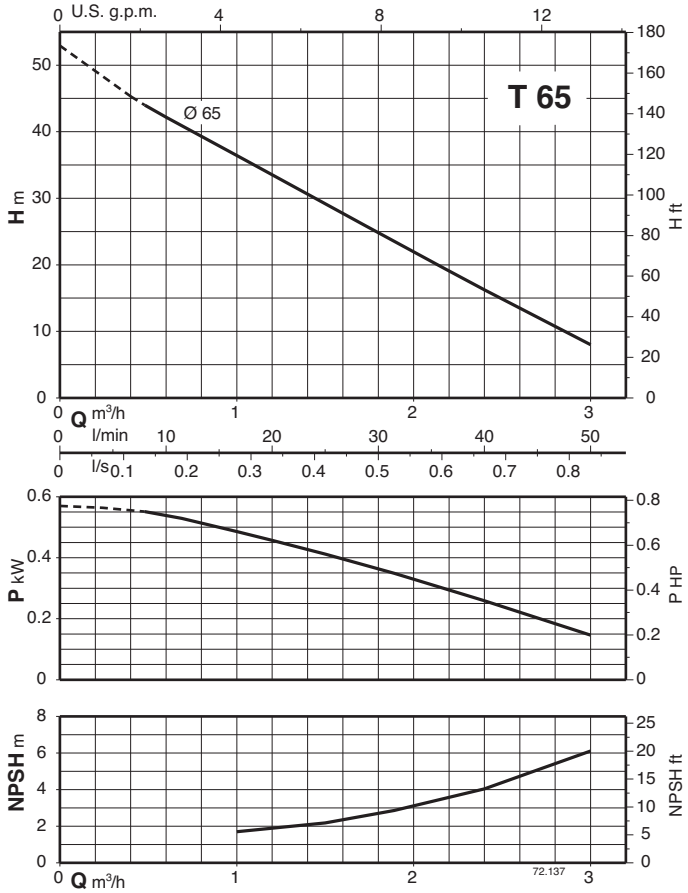

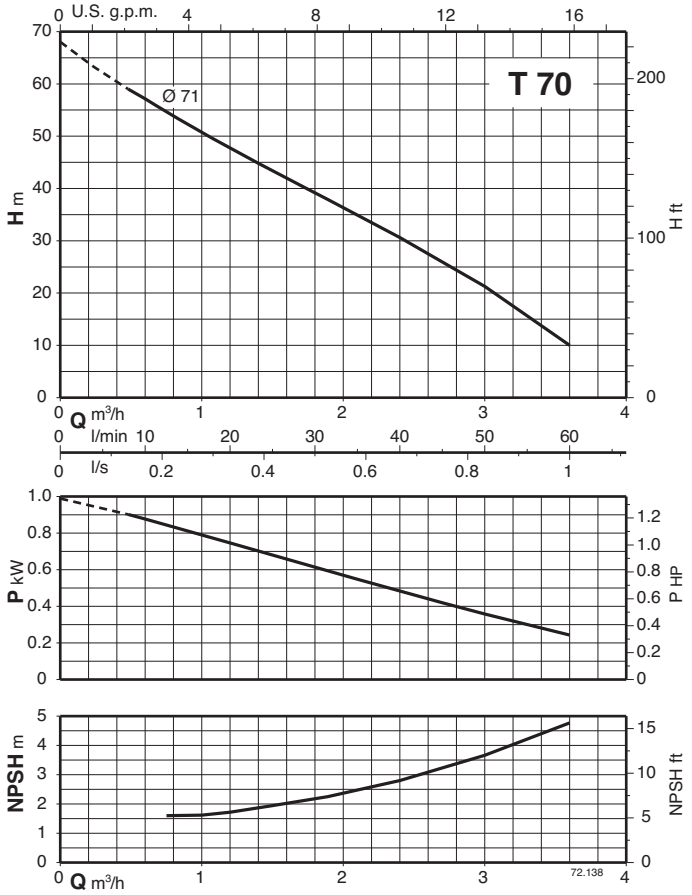

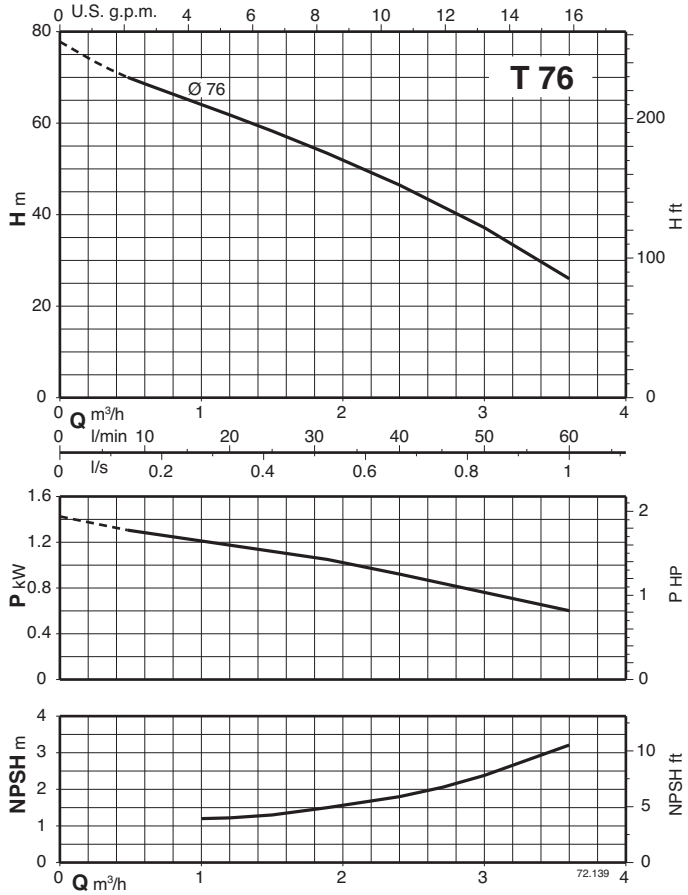

CALPEDA ROMANIA - INFINITY PUMPS SRL
Tel: 0268.33.47.47 / 0722.244.944
vanzari@calpeda.ro | www.calpeda.ro

T, TP

Peripheral Pumps

Characteristic curves n ≈ 2900 rpm

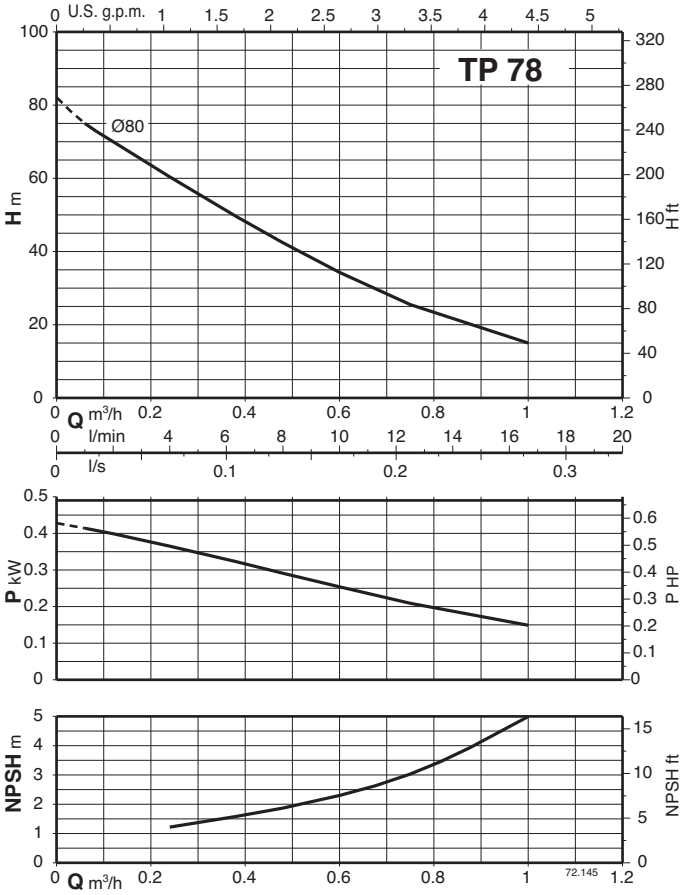

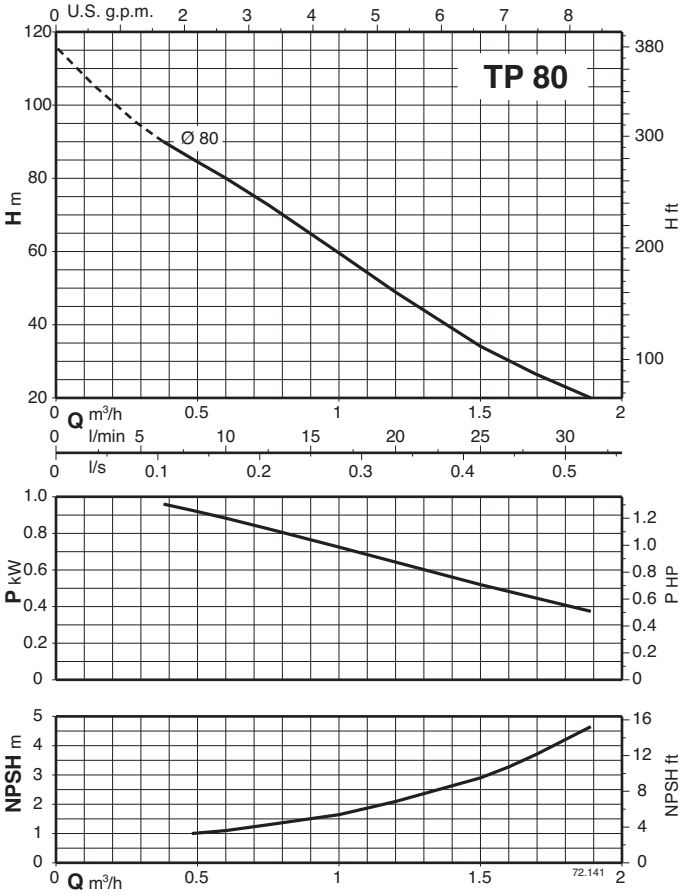

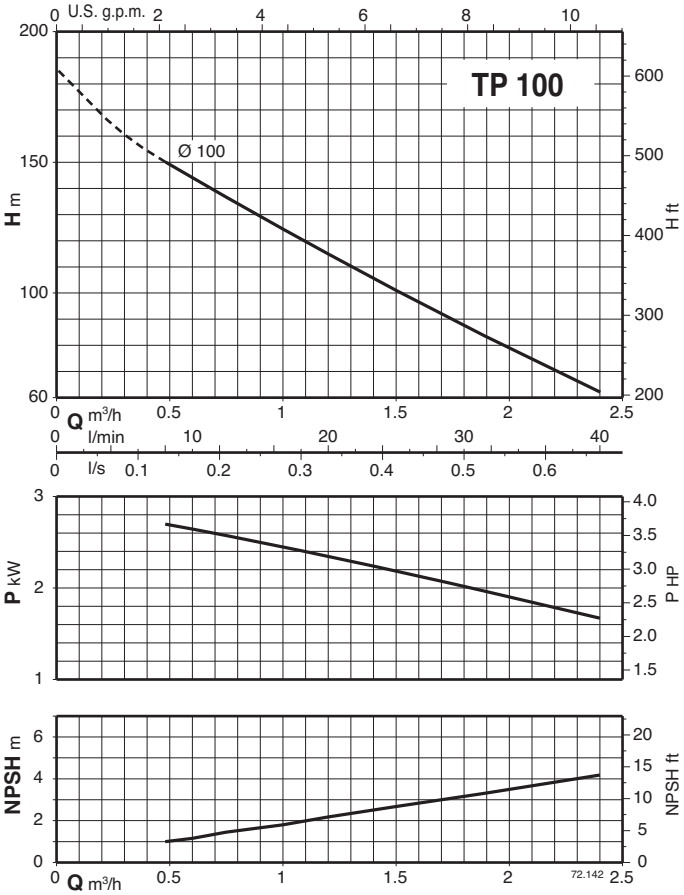

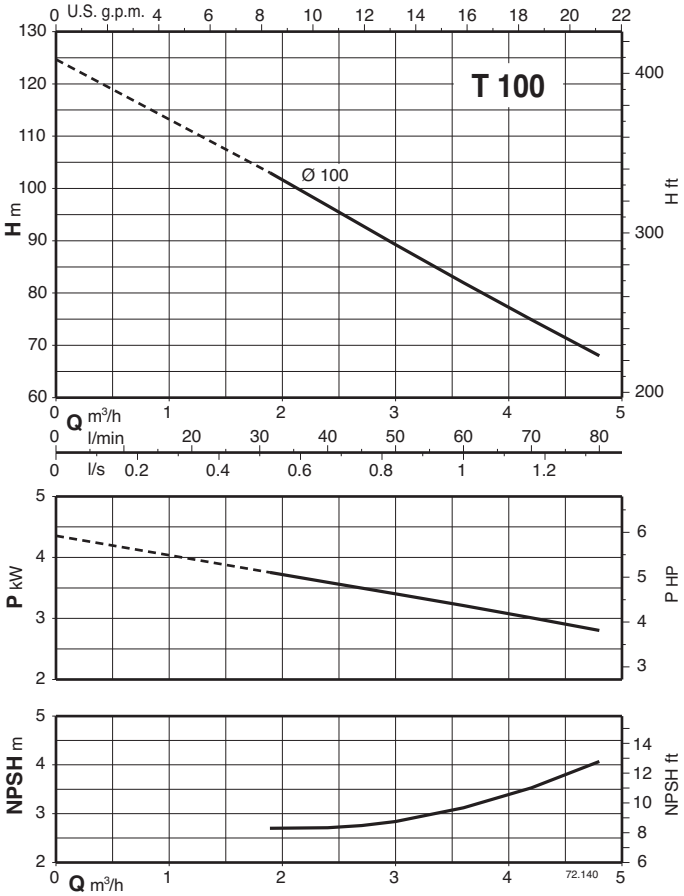

CALPEDA ROMANIA - INFINITY PUMPS SRL
Tel: 0268.33.47.47 / 0722.244.944
vanzari@calpeda.ro | www.calpeda.ro

T, TP

Peripheral Pumps

Characteristic curves n ≈ 2900 rpm

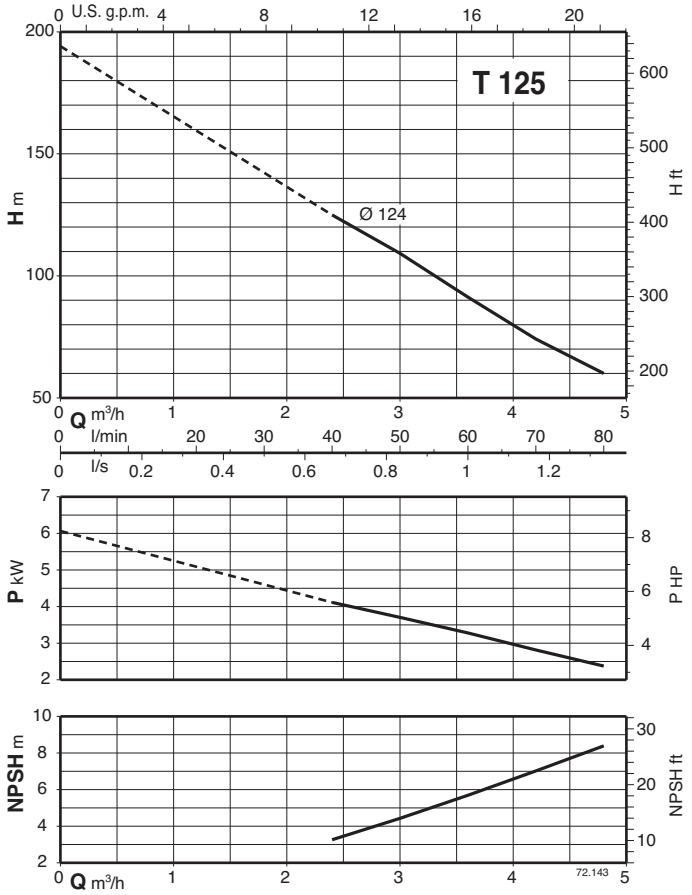

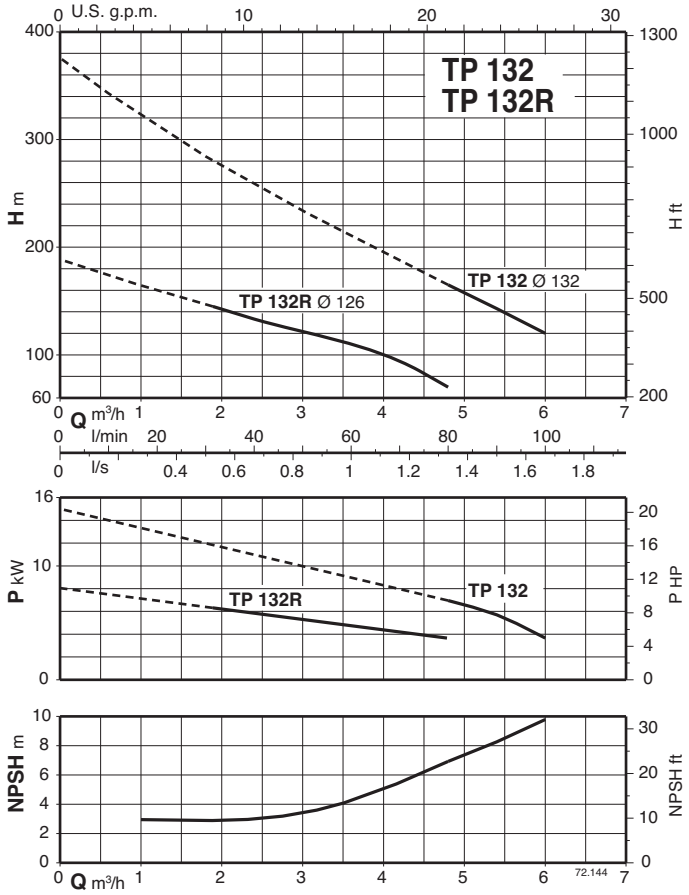

CALPEDA ROMANIA - INFINITY PUMPS SRL
Tel: 0268.33.47.47 / 0722.244.944
vanzari@calpeda.ro | www.calpeda.ro

T, TP

Peripheral Pumps

Features

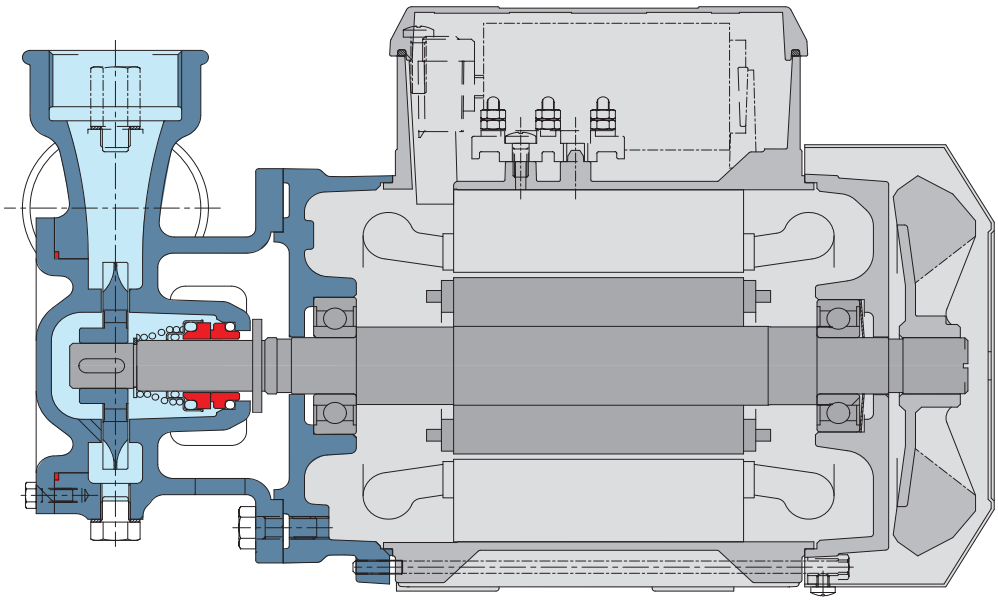

Range
The high number of pumps in the range can meet the widest range of services required by the user.

Flexible
The option to choose between cast iron and bronze materias for the hydraulic parts in contact with the pumped liquid allows T-TP series pumps to be selected for use with different types of liquids.

Reliable
The bearing and shaft are designed to ensure the reduction of the stress, providing high reliability under all operating conditions.

Optimized hydraulics
The pump hydraulics are designed to ensure high performance and consistency of performance.

CALPEDA ROMANIA - INFINITY PUMPS SRL
Tel: 0268.33.47.47 / 0722.244.944
vanzari@calpeda.ro | www.calpeda.ro

CA

Self-Priming Liquid Ring Pumps

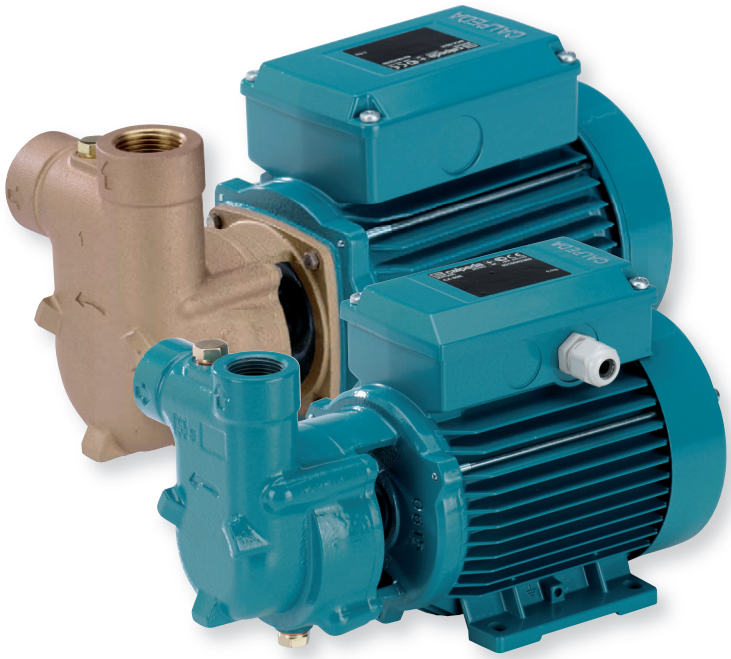

Construction

Close-coupled self-priming liquid ring pumps with star impeller and anti-lock wear ring.
CA: version with pump casing and lantern bracket in cast iron.
B-CA: version with pump casing and lantern bracket in bronze (the pumps are supplied fully painted).

Applications

For clean liquids without abrasives, without suspended solids, non-explosive, non-aggressive for the pump materials.
If the liquid to be pumped has entrained air or gas or the flow in the suction pipe is not stable.
For drawing water out of a well.
For increasing network pressure (follow local specifications).

Operating conditions

Liquid temperature from -10 °C to +90 °C.
Ambient temperature up to 40 °C.
Negative suction pressure up to 9 m.
Continuous duty.

Motor

2-pole induction motor, 50 Hz (n ≈ 2900 rpm).

CA: three-phase 230/400 V ± 10%.

CAM: single-phase 230 V ± 10%, with thermal protector. Capacitor inside the terminal box.

Insulation class F.
Protection IP 54.
Classification scheme IE3 for three-phase motors from 0,75 kW.
Constructed in accordance with: EN 60034-1; EN 60034-30-1. EN 60335-1, EN 60335-2-41.

Materials

Components	CA	B-CA
Pump casing Lantern bracket	Cast iron GJL 200 EN 1561	Bronze G-Cu Sn 10 EN 1982
Impeller	Brass P- Cu Zn Pb 2 UNI 5705	
Shaft	Chrome steel 1.4104 EN 10088 (AISI 430)	Cr-Ni-Mo steel 1.4401 EN 10088 (AISI 316)
Mechanical seal	Carbon - Ceramic - NBR	

Special features on request

- Other voltages.
- Frequency 60 Hz (as per 60 Hz data sheet).
- Protection IP 55.
- Special mechanical seal
- Higher or lower liquid or ambient temperatures.
- Construction with bearing bracket.

Coverage chart n ≈ 2900 rpm

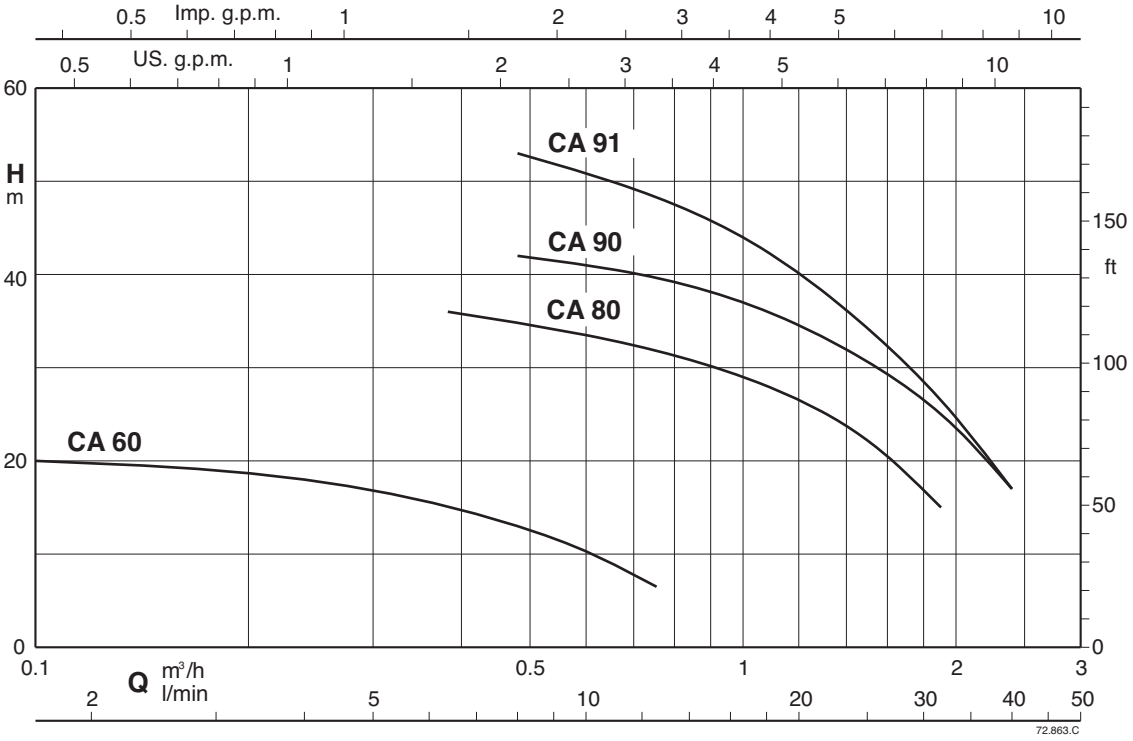

CALPEDA ROMANIA - INFINITY PUMPS SRL
Tel: 0268.33.47.47 / 0722.244.944
vanzari@calpeda.ro | www.calpeda.ro

CA

Self-Priming Liquid Ring Pumps

Performance n ≈ 2900 rpm

3 ~	230 V	400 V	1 ~	230 V	P_1	P_2		Q m^3/h	0,12	0,24	0,38	0,48	0,6	0,75	1	1,2	1,5	1,89	2,4
	A	A		A	kW	kW	HP	l/min	2	4	6,3	8	10	12,5	16	20	25	31,5	40
CA 60E B-CA 60E	1,7	1	**CAM 60E** B-CAM 60E	1,6	0,26	0,15	0,2	**H** m	20	18	15,5	13	10,5	6,5					
CA 80E B-CA 80/A	2,8 2,3	1,6 1,3	**CAM 80E** B-CAM 80/A	3,3 3,6	0,72	0,45	0,6				36	35	33,5	31,5	29	26	22	15	
CA 90/A B-CA 90/A	3	1,7	**CAM 90/A** B-CAM 90/A	4,5	0,9	0,55	0,75					42	41	40	37	34	30	25	17
CA 91/B B-CA 91/B	3,7	2,2	**CAM 91/A** B-CAM 91/A	5,7	1,2	0,75	1					53	51	48	44	39	34	26,5	17

P_1 Maximum power input. P_2 Rated motor power output. B-CA = Bronze construction. **H** Total head in m.

Dimensions and weights

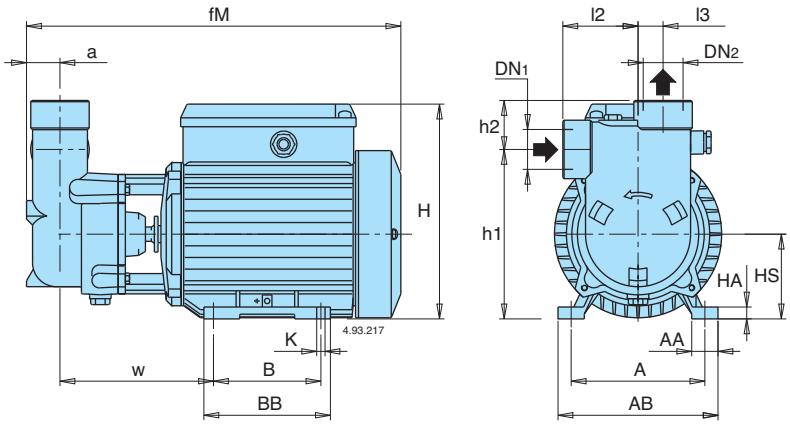

TYPE	DN1	DN2	mm																kg	
	ISO 228		a	fM	HS	h2	h1	H	BB	B	AB	A	AA	K	l2	l3	w	HA	**CA**	**B-CA**
CA 60E - B-CA 60E	G 1/2	G 1/2	18	256	63	25	103	158	96	80	122	100	22	7	45	14	103	8	6	6,8
CA 80E	G 3/4	G 3/4	23	272	63	27	126	158	96	80	122	100	22	7	55	17	109	8	7,6	-
CA 90/A	G 1	G 1	28	318	71	41	142	182	106	90	134	112	22	7	63	21	128	10	10,8	-
CA 91/B																			12,2	-

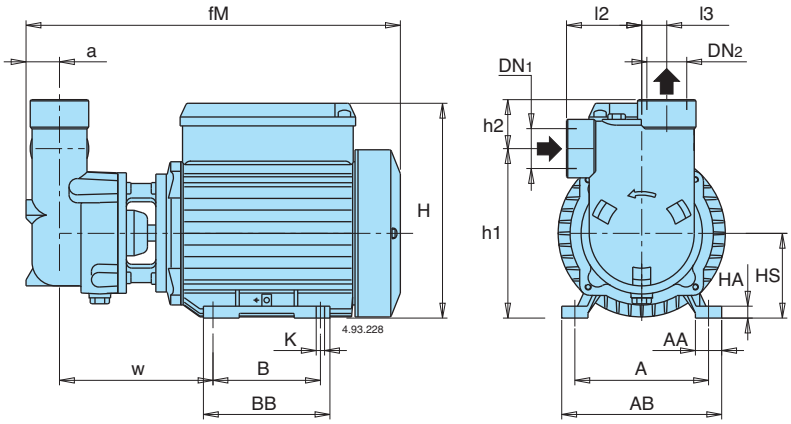

TYPE	DN1	DN2	mm																kg
	ISO 228		a	fM	HS	h2	h1	H	BB	B	AB	A	AA	K	l2	l3	w	HA	**B-CA**
B-CA 80/A	G 3/4	G 3/4	23	307	71	27	134	182	106	90	134	112	22	7	55	17	122	10	10
B-CA 90/A	G 1	G 1	28	318	71	41	142	182	106	90	134	112	22	7	63	21	128	10	13,1
B-CA 91/B																			14,7

CALPEDA ROMANIA - INFINITY PUMPS SRL
Tel: 0268.33.47.47 / 0722.244.944
vanzari@calpeda.ro | www.calpeda.ro

CA

Self-Priming Liquid Ring Pumps

Characteristic curves n ≈ 2900 rpm

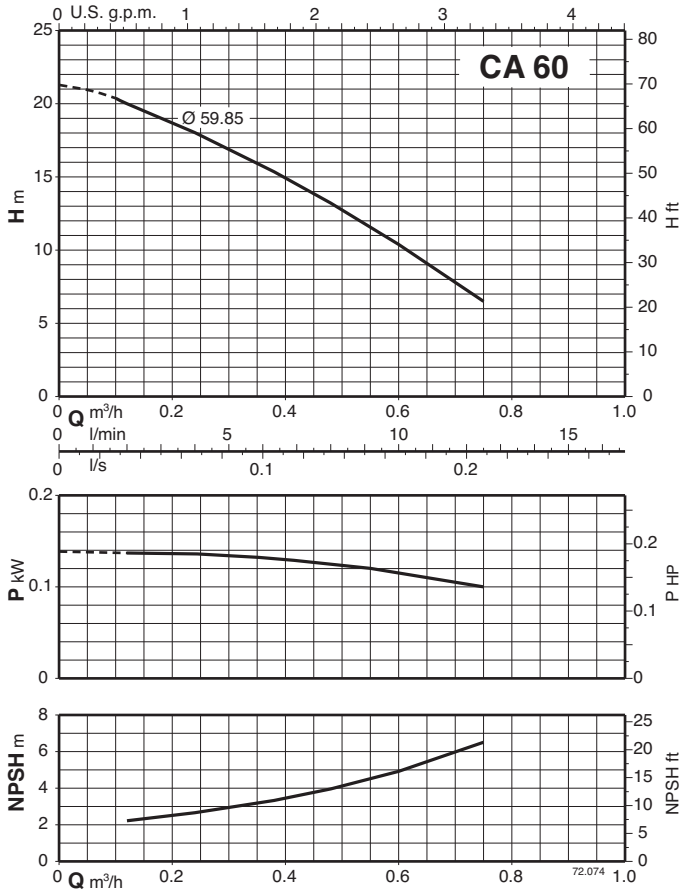

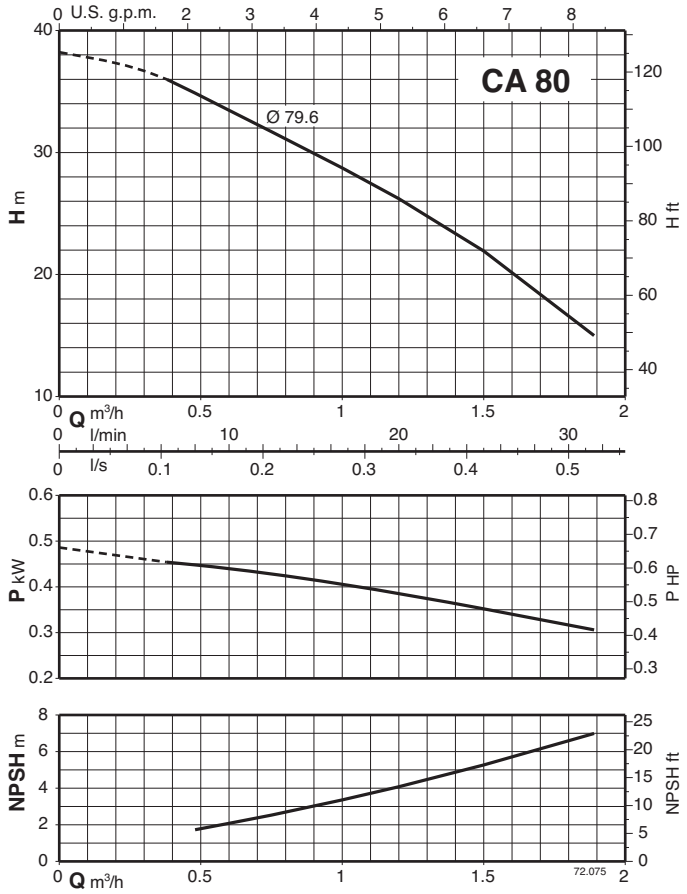

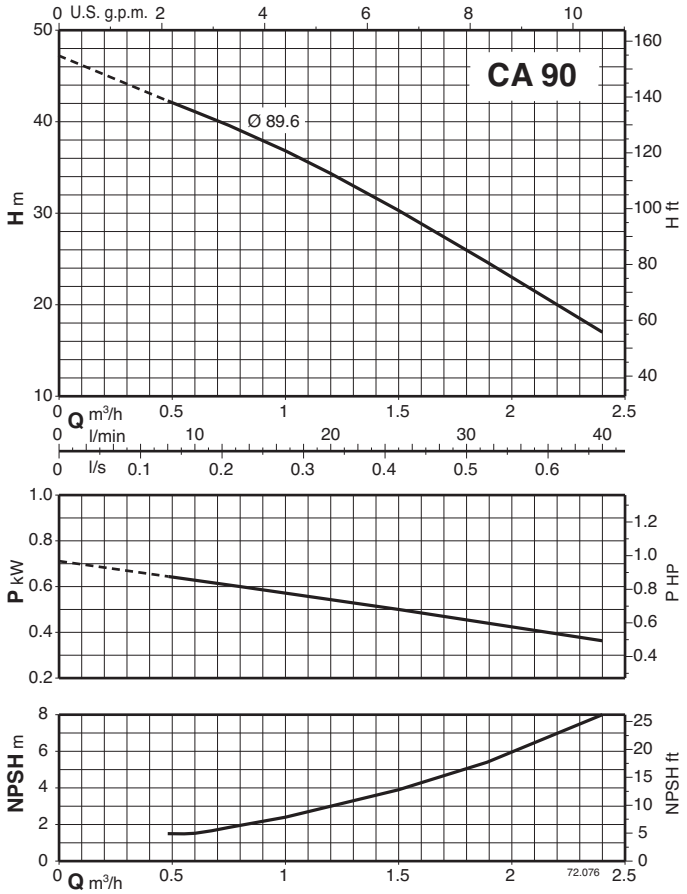

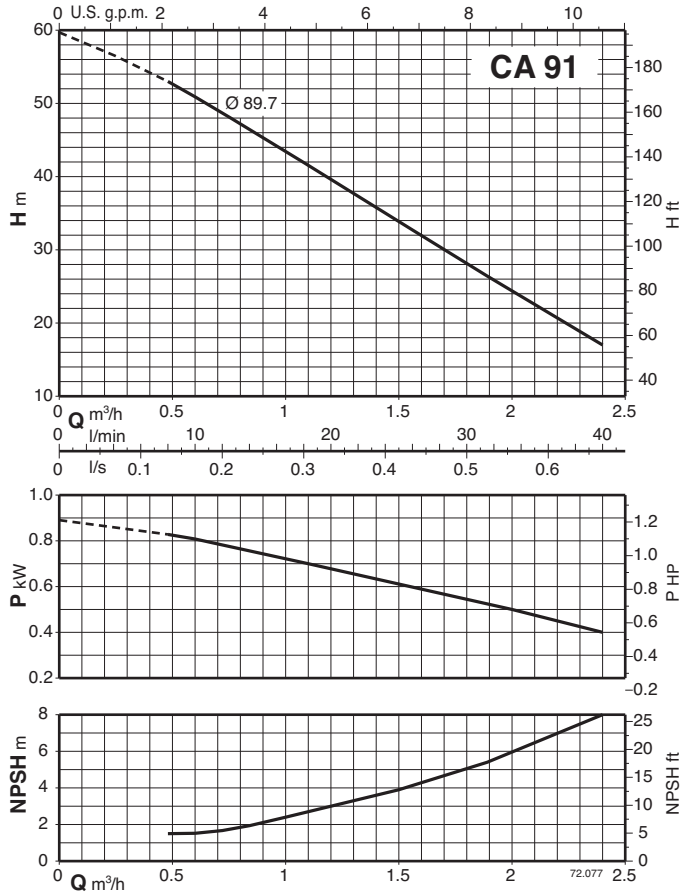

CALPEDA ROMANIA - INFINITY PUMPS SRL
Tel: 0268.33.47.47 / 0722.244.944
vanzari@calpeda.ro | www.calpeda.ro

Features

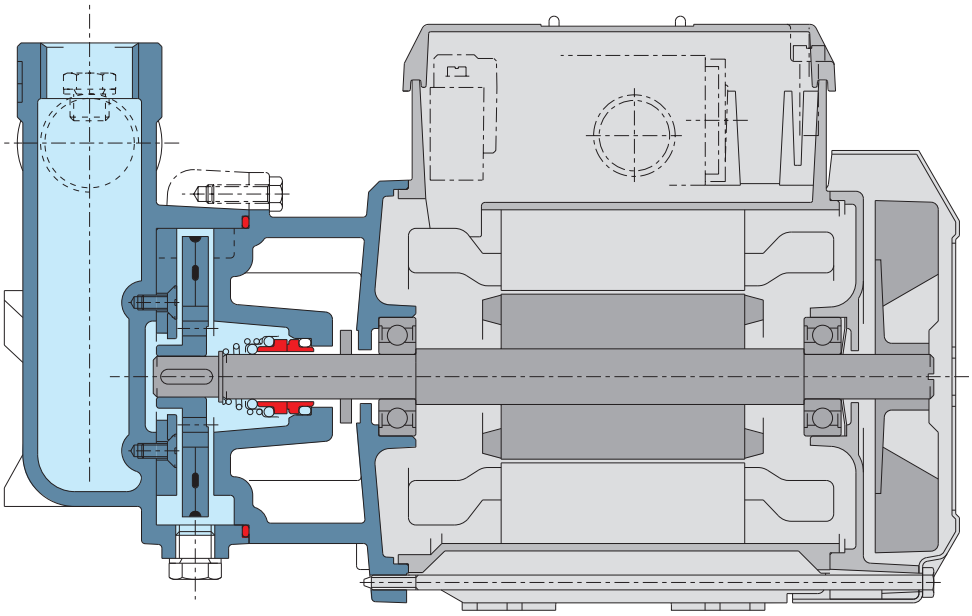

Fast self priming
The hydraulic design ensures fast self priming once the pump body is filled with water.

Flexible
The option to choose between cast iron and bronze materias for the hydraulic parts in contact with the pumped liquid allows CA series pumps to be selected for use with different types of liquids.

Easy maintenance
The construction features an anti-wear ring screwed to the pump body, allowing for rapid replacement in case of wear.

CALPEDA ROMANIA - INFINITY PUMPS SRL
Tel: 0268.33.47.47 / 0722.244.944
vanzari@calpeda.ro | www.calpeda.ro

NGL

Self-Priming Pumps

Construction

Close-coupled self-priming shallow-well pump with built-in ejector.

Applications

For drawing water out of a well.
For lifting water containing air or other gases.
For increasing water pressure from flooded suction applications.
As pressure boosting pump for central water systems with low pressure (follow local specifications if increasing network pressure).
For garden use.
For washing with a jet of water.

Operating conditions

Liquid temperature: 0 °C to +35 °C.
Ambient temperature up to +40 °C.
Suction lift up to 9 m.
Maximum permissible pressure in the pump casing: 8 bar.
Continuous duty.

Motor

2-pole induction motor, 50 Hz (n ≈ 2800 rpm).
NGL: three-phase 230/400 V ± 10%.
NGLM: single-phase 230 V ± 10%, with thermal protector.
Capacitor inside the terminal box.
Insulation class F.
Protection IP 54.
Classification scheme IE3 for three-phase motors from 0,75 kW.
Constructed in accordance with: EN 60034-1; EN 60034-30-1.
EN 60335-1, EN 60335-2-41.

Materials

Component	Material
Pump casing	Cast iron GJL 200 EN 1561
Casing cover	Cr-Ni steel 1.4301 EN 10088 (AISI 304)
Impeller	PPO-GF20 (Noryl)
Wear ring impeller-diffuser	Cr-Ni steel 1.4301 EN 10088 (AISI 304)
Diffuser	PPO-GF20 (Noryl)
Ejector	PPO-GF20 (Noryl)
Shaft	Chrome steel 1.4104 EN 10088 (AISI 430)
Mechanical seal	Carbon - Ceramic - NBR

Special features on request

- Other voltages.
- Frequency 60 Hz (as per 60 Hz data sheet).

Characteristic curves n ≈ 2800 rpm

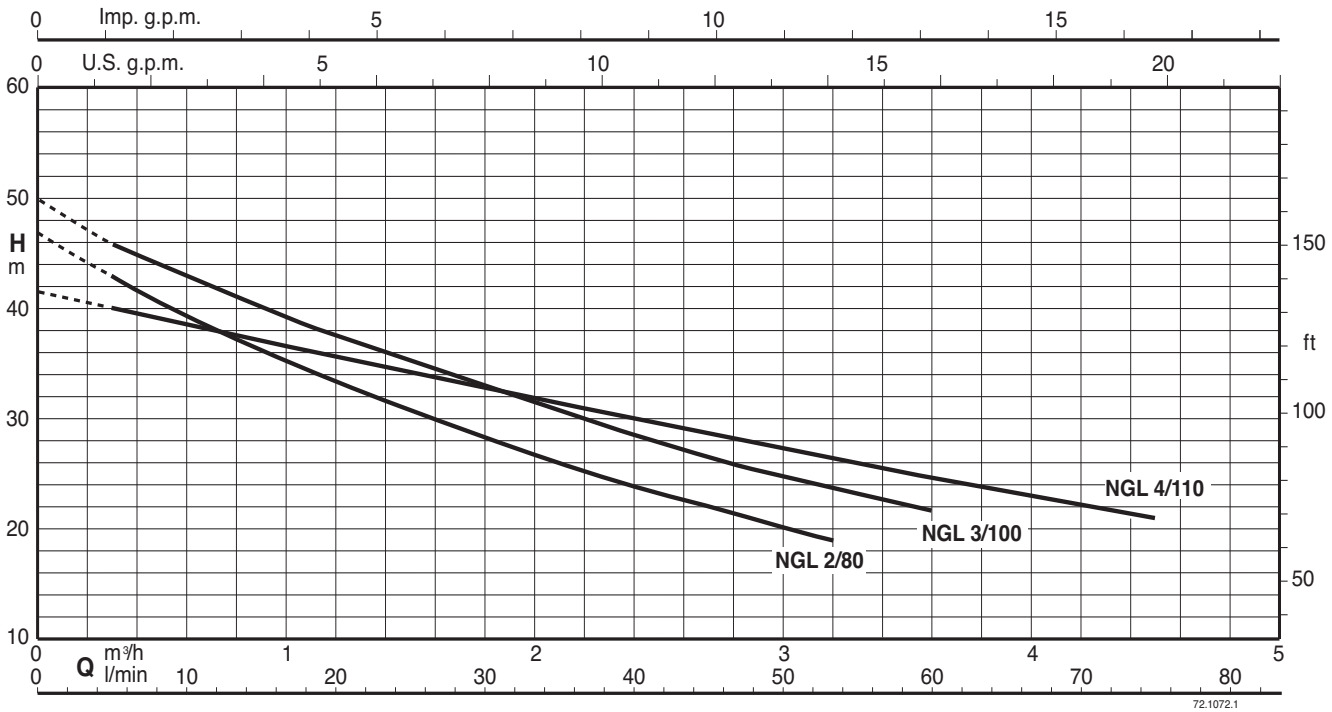

CALPEDA ROMANIA - INFINITY PUMPS SRL
Tel: 0268.33.47.47 / 0722.244.944
vanzari@calpeda.ro | www.calpeda.ro

NGL

Self-Priming Pumps

Performance n ≈ 2800 rpm

3~	230V	400V	1~	230V	P_1	P_2		Q m³/h	0	0,3	1	2	2,4	3	3,2	3,6	4	4,5
		A	A	A	kW	kW	HP	l/min	0	5	16,6	33,3	40	50	53,3	60	66,6	75
NGL 2/80	2,8	1,6	**NGLM 2/80**	3,8	0,8	0,55	0,75	H m	46,8	43	35,2	26,7	23,9	20,2	19,1			
NGL 3/100	3	1,7	**NGLM 3/100**	4,5	0,95	0,65	0,9		50	45,9	39,4	31,3	28,5	24,8	23,7	21,7		
NGL 4/110	3,7	2,2	**NGLM 4/110**	5,4	1	0,75	1		41,6	40	36,6	31,9	30	27,3	26,4	24,6	23	21,1

P_1 Max. power input. P_2 Rated motor power output. Tolerances according to UNI EN ISO 9906:2012

Characteristic Curves for different suction lifts Hs

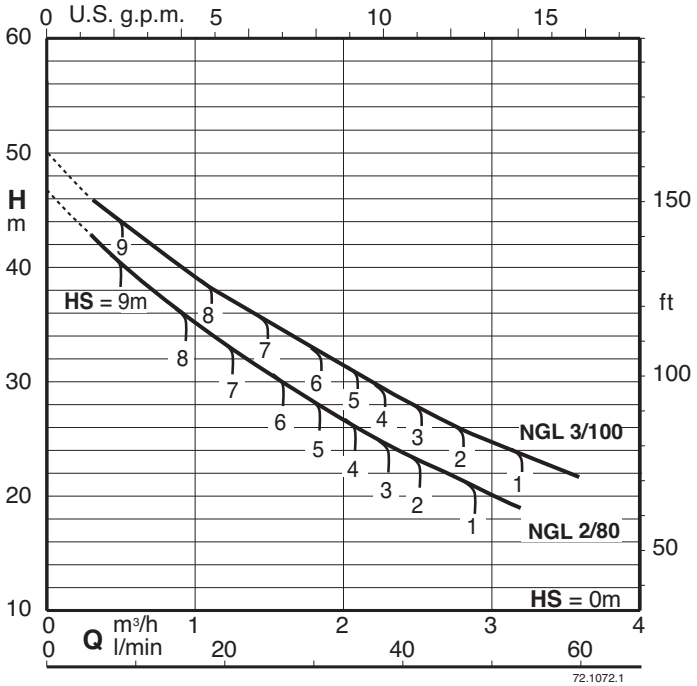

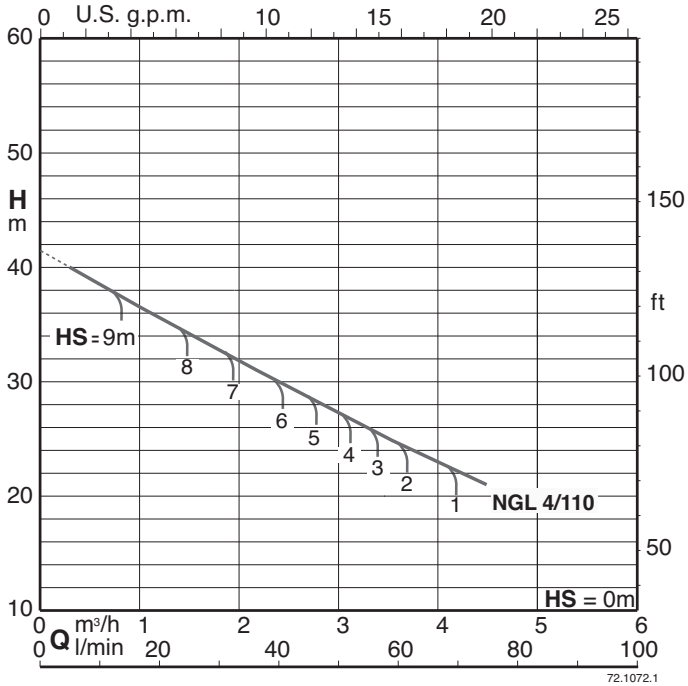

Self-priming capability

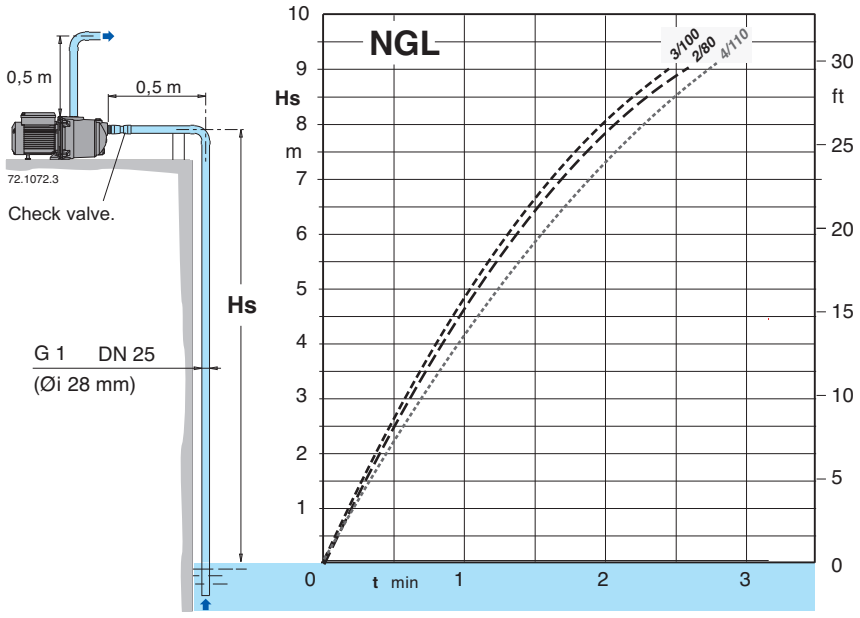

Hs (m) Suction lift.
t (min) Self-priming time.

CALPEDA ROMANIA - INFINITY PUMPS SRL
Tel: 0268.33.47.47 / 0722.244.944
vanzari@calpeda.ro | www.calpeda.ro

NGL

Self-Priming Pumps

Dimensions and weights

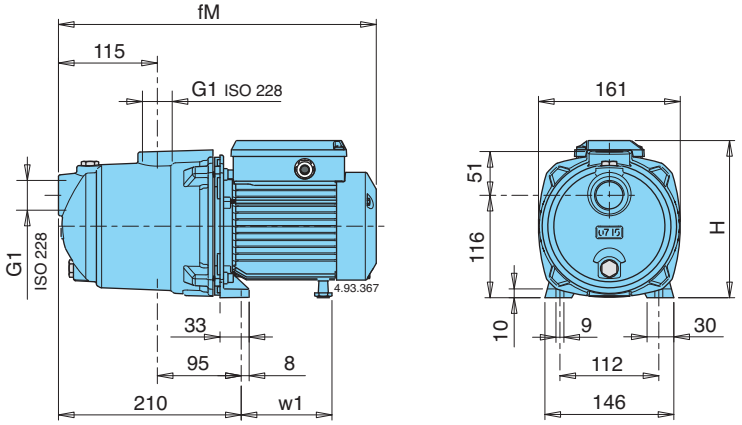

TYPE	Dimensions mm			Net weight kg	
	fM	H	w1	NGL	NGLM
NGL 2/80	362	176	102	9,8	9,9
NGL 3/100	391	192	112	11,1	12,1
NGL 4/110	391	192	112	13,1	13,1

CALPEDA ROMANIA - INFINITY PUMPS SRL
Tel: 0268.33.47.47 / 0722.244.944
vanzari@calpeda.ro | www.calpeda.ro

NGL

Self-Priming Pumps

Features

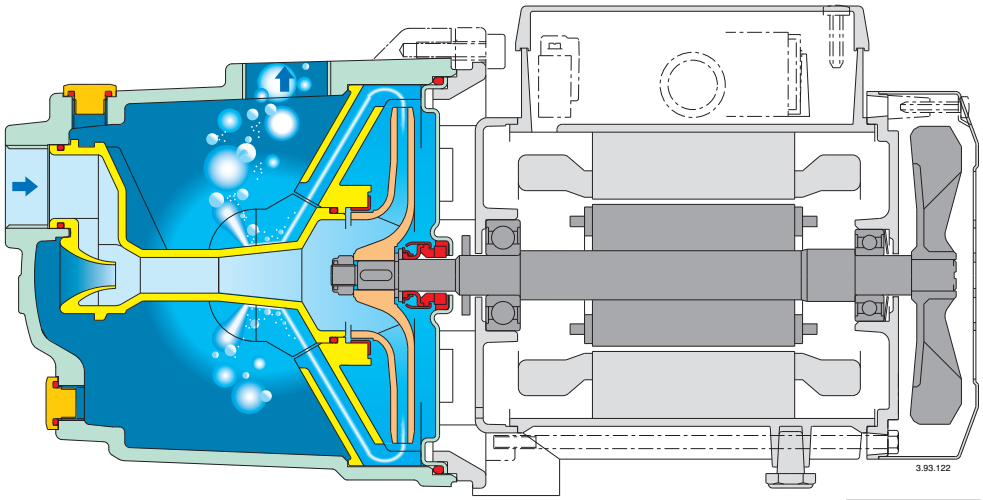

* Patented

A different pump with new features
An exclusive diffuser design with flow control device* provides for compact construction, fast self-priming capability and low noise.

Reliable
With new design features the NGL is more robust and forgiving when temporary abnormal operating conditions may exist.

Compact
The NGL is smaller than conventional pumps of a similar type, allowing for installation in restricted spaces and providing for easier retrofit applications.

Safe
Fast air evacuation reduces the risk of air-pockets developing at the mechanical seal preventing the danger of seal failure due to a lack of flushing and cooling.

Better self-priming
The NGL are capable of lifting water from depths of 9 m in less than 3 minutes, offers new possibilities on suction lift applications and provides better trouble free service on normal shallow-well suction lift duties, also with a long suction pipe above the water level.

Low noise
The new diffuser and flow control device* guide the fluid from the impeller into the central part of the pump casing, reducing turbulence and velocity, with effective use of the surrounding liquid in dampening the noise of flow.

CALPEDA ROMANIA - INFINITY PUMPS SRL
Tel: 0268.33.47.47 / 0722.244.944
vanzari@calpeda.ro | www.calpeda.ro

NGX

Self-Priming Pumps

Construction

Close-coupled self-priming shallow-well pump with built-in ejector.
A high-quality pump for domestic water supply. Designed with environmental considerations, featuring a stainless steel casing, brass alloy impeller with minimal use of plastic materials.

Applications

For drawing water out of a well.
For lifting water containing air or other gases.
For increasing water pressure from flooded suction applications.
As pressure boosting pump for central water systems with low pressure (follow local specifications if increasing network pressure).
For garden use.
For washing with a jet of water.

Operating conditions

Liquid temperature: 0 °C to +35 °C.
Ambient temperature up to +40 °C.
Suction lift up to 9 m.
Maximum permissible pressure in the pump casing: 8 bar.
Continuous duty.

Motor

2-pole induction motor, 50 Hz (n ≈ 2800 rpm).
NGX: three-phase 230/400 V ± 10%.
NGXM: single-phase 230 V ± 10%, with thermal protector.
Capacitor inside the terminal box.
Insulation class F.
Protection IP 54.
Classification scheme IE3 for three-phase motors from 0,75 kW.
Constructed in accordance with: EN 60034-1; EN 60034-30-1. EN 60335-1, EN 60335-2-41.

Materials

Component	Material
Pump casing	Cr-Ni steel 1.4301 EN 10088 (AISI 304)
Casing cover	Cr-Ni steel 1.4301 EN 10088 (AISI 304)
Impeller	Brass P-Cu Zn 40 Pb 2 UNI 5705 (PPO-GF20 (Noryl) for NGX 2/80,3/100,4/110)
Wear ring impeller-diffuser	Cr-Ni steel 1.4301 EN 10088 (AISI 304)
Diffuser Ejector	PPO-GF20 (Noryl) PPO-GF20 (Noryl)
Shaft	Chrome steel 1.4104 EN 10088 (AISI 430) Cr-Ni steel 1.4305 EN 10088 (AISI 303) for NGX 5,6
Mechanical seal	Carbon - Ceramic - NBR

Special features on request

- Other voltages.
- Frequency 60 Hz (as per 60 Hz data sheet).

Characteristic curves n ≈ 2800 rpm

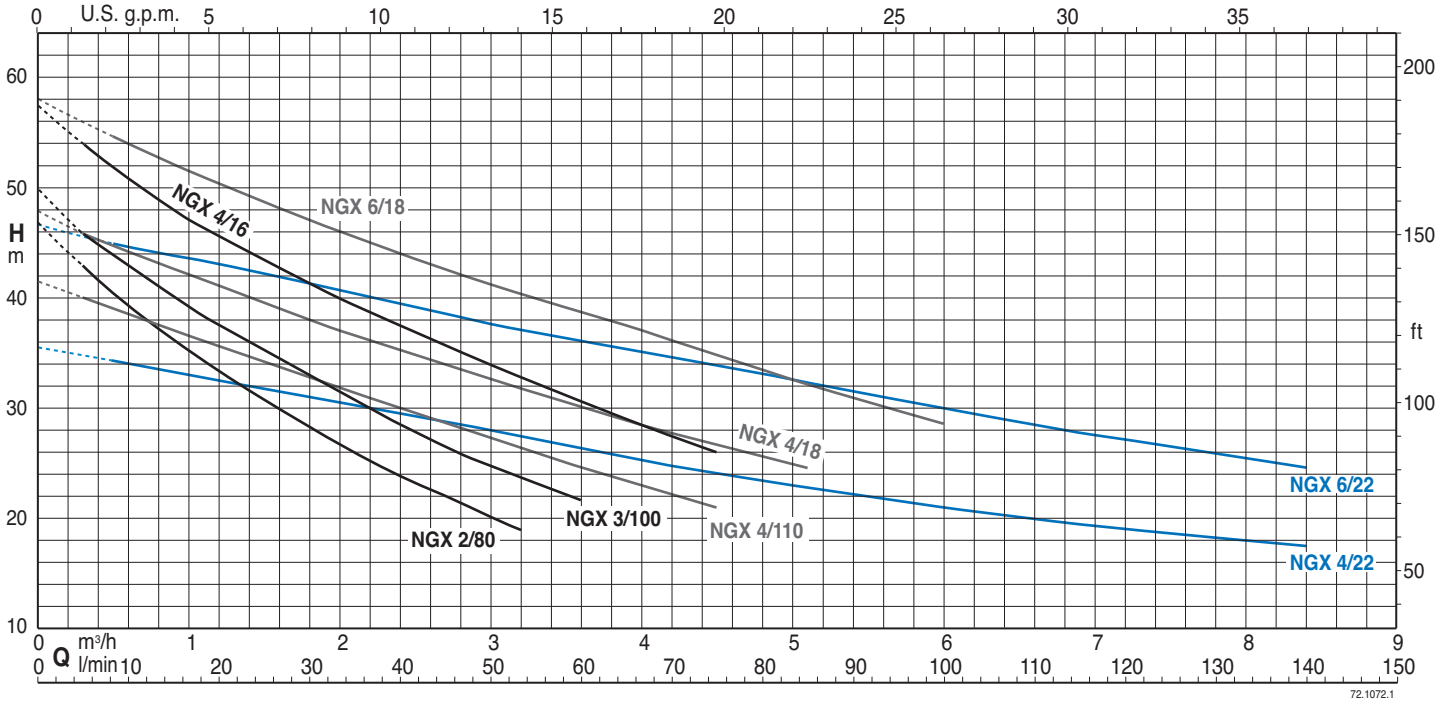

CALPEDA ROMANIA - INFINITY PUMPS SRL
Tel: 0268.33.47.47 / 0722.244.944
vanzari@calpeda.ro | www.calpeda.ro

NGX

Self-Priming Pumps

Performance n ≈ 2800 rpm

3~	230V	400V	1~	230V	P1	P2		Q m³/h	0	0,3	1	2	2,4	3	3,2	3,6	4	4,5
		A	A	A	kW	kW	HP	l/min	0	5	16,6	33,3	40	50	53,3	60	66,6	75
NGX 2/80	2,8	1,6	**NGXM 2/80**	3,8	0,8	0,55	0,75	H m	46,8	43	35,2	26,7	23,9	20,2	19,1			
NGX 3/100	3	1,7	**NGXM 3/100**	4,5	0,95	0,65	0,9		50	45,9	39,4	31,3	28,5	24,8	23,7	21,7		
NGX 4/110	3,7	2,2	**NGXM 4/110**	5,4	1	0,75	1		41,6	40	36,6	31,9	30	27,3	26,4	24,6	23	21,1

3~	230V	400V	1~	230V	P1	P2		Q m³/h	0	0,5	1	2	2,4	3	4	4,5	5	5,5	6	6,5	7	8	8,4
	A	A		A	kW	kW	HP	l/min	0	8,3	16,6	33,3	40	50	66,6	75	83,3	91,6	100	108	116	133	140
NGX 4/16	4,5	2,6	**NGXM 4/16**	7	1,6	1,1	1,5	H m	57,5	54	47,3	40	37,5	34	28,5	26							
NGX 4/18	4,5	2,6	**NGXM 4/18**	7	1,6	1,1	1,5		48	46	42,5	37	35	32,5	28,5	27	25						
NGX 4/22	4,5	2,6	**NGXM 4/22**	7	1,6	1,1	1,5		35,5	34,8	33	30,5	29,5	28	25,3	24	23	22	21	20,3	19,5	18	17,5
NGX 6/18/A	7,5	4,3	**NGXM 6/18**	9,2	2	1,5	2		58	54,7	51,5	46	44	41,3	37	34,7	32,5	30,5	28,5				
NGX 6/22/A	7,5	4,3	**NGXM 6/22**	9,2	2	1,5	2		46,5	45	43,5	40,5	39,3	37,5	35	33,5	32,5	31,2	30	28,5	27,5	25,5	24,5

P_1 Max. power input. P_2 Rated motor power output.

Tolerances according to UNI EN ISO 9906:2012

Characteristic curves for different suction lifts Hs

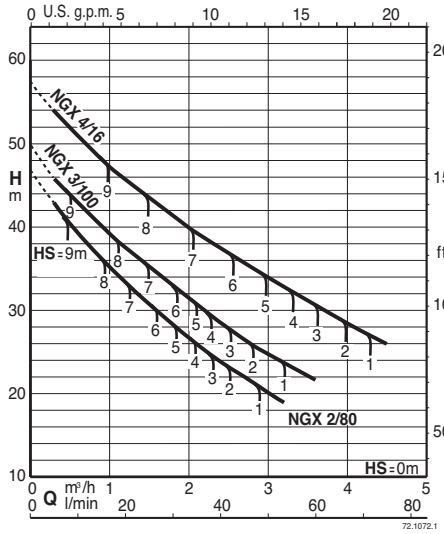

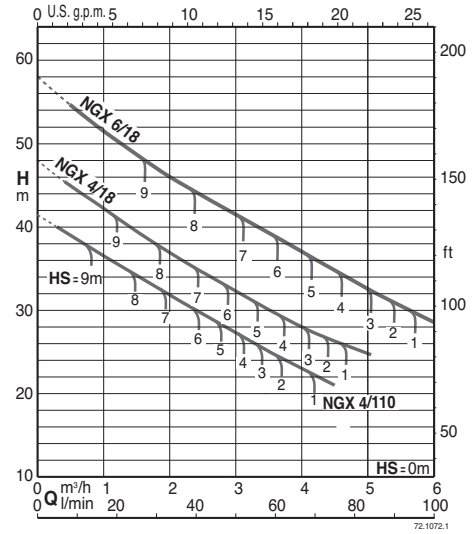

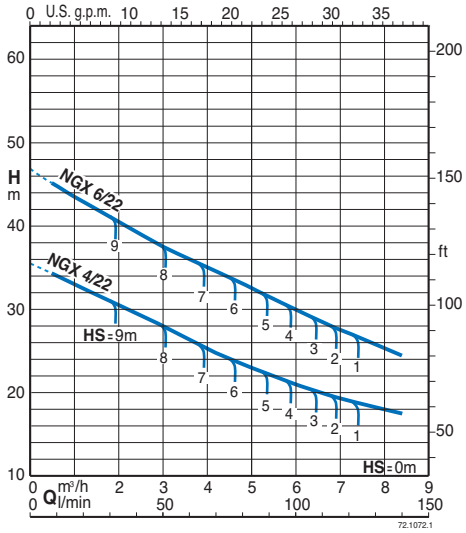

Self-priming capability

50 Hz (n ≈ 2800 1/min), H_2O, T = 20°C, Pa = 1000 hPa (mbar)

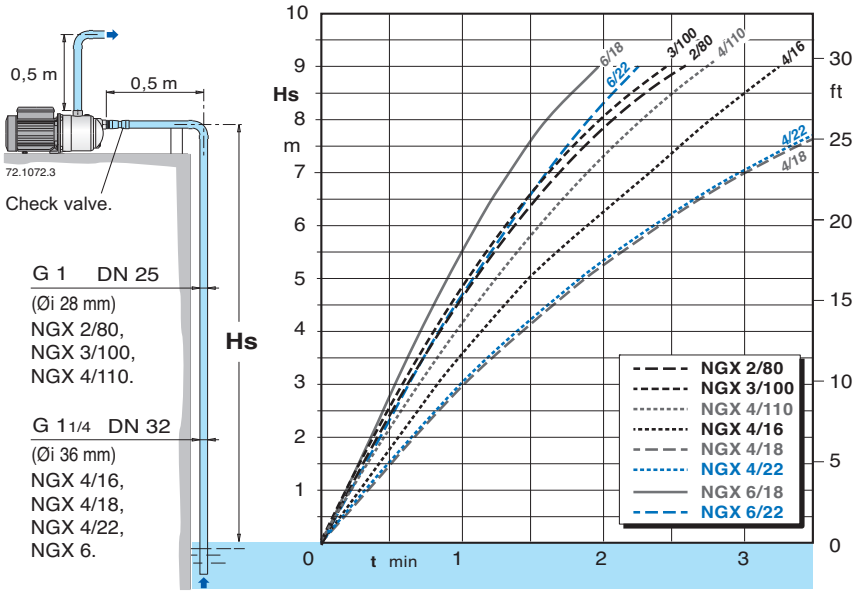

Hs (m) Suction lift.
t (min) Self-priming time.

CALPEDA ROMANIA - INFINITY PUMPS SRL
Tel: 0268.33.47.47 / 0722.244.944
vanzari@calpeda.ro | www.calpeda.ro

NGX

Self-Priming Pumps

Dimensions and weights

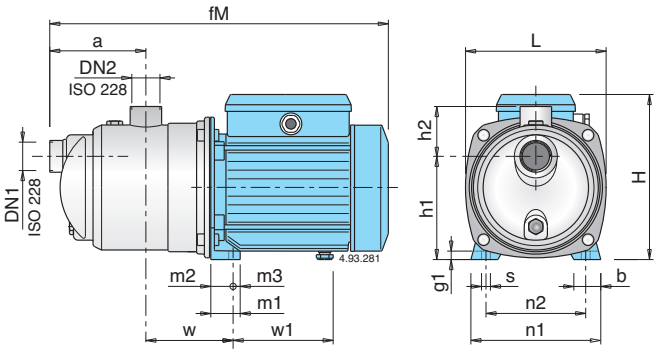

TYPE	DN1	DN2	Dimensions mm																Net weight kg	
	ISO 228		fM	a	w	h1	h2	H	L	m1	m2	m3	n1	n2	b	s	g1	w1	NGX	NGXM
NGX 2/80	G 1	G 1	362	115	95	116	61	176	161	33	25	8	146	112	30	9	10	102	6,9	7,1
NGX 3/100			391					192										112	8,3	9,2
NGX 4/110			391					192										112	10,2	10,2
NGX 4/16	G 1 1/4	G 1	462	140	113	152	68	225	213,5	37,5	28	9,5	185	155	33	9,5	11	147	14,5	14,8
NGX 4/18																				
NGX 4/22																				
NGX 6/18/A	G 1 1/4	G 1	488,5	140	113	152	68	240	213,5	37,5	28	9,5	185	155	33	9,5	11	157,5	17,8	18,2
NGX 6/22/A																				

CALPEDA ROMANIA - INFINITY PUMPS SRL
Tel: 0268.33.47.47 / 0722.244.944
vanzari@calpeda.ro | www.calpeda.ro

NGX

Self-Priming Pumps

Features

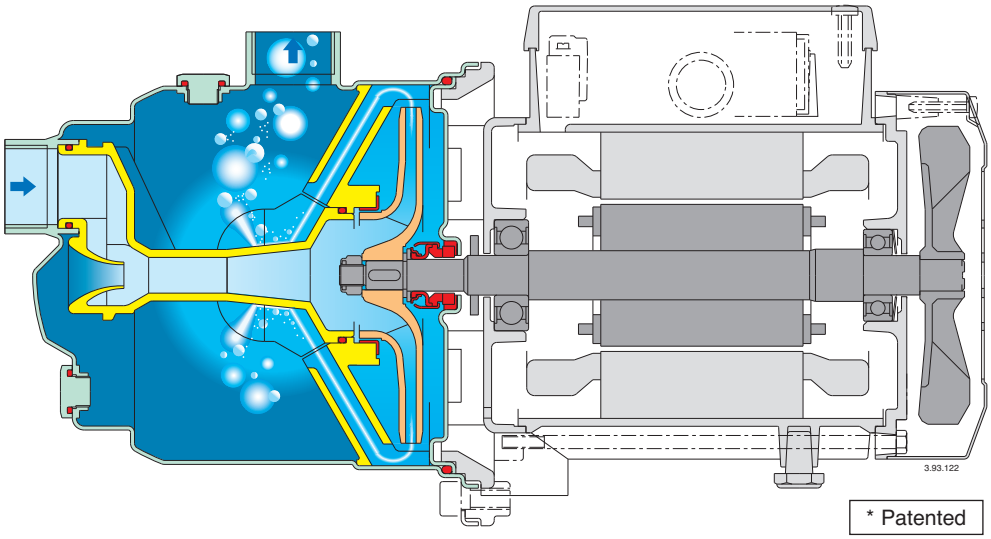

A different pump with new features
An exclusive diffuser design with flow control device* provides for compact construction, fast self-priming capability and low noise.

Reliable
With new design features the NGX is more robust and forgiving when temporary abnormal operating conditions may exist.

Compact
The NGX is smaller than conventional pumps of a similar type, allowing for installation in restricted spaces and providing for easier retrofit applications.

Safe
Fast air evacuation reduces the risk of air-pockets developing at the mechanical seal preventing the danger of seal failure due to a lack of flushing and cooling.

Better self-priming
The NGX are capable of lifting water from depths of 9 m in less than 4 minutes, offers new possibilities on suction lift applications and provides better trouble free service on normal shallow-well suction lift duties, also with a long suction pipe above the water level.

Low noise
The new diffuser and flow control device* guide the fluid from the impeller into the central part of the pump casing, reducing turbulence and velocity, with effective use of the surrounding liquid in dampening the noise of flow.

CALPEDA ROMANIA - INFINITY PUMPS SRL
Tel: 0268.33.47.47 / 0722.244.944
vanzari@calpeda.ro | www.calpeda.ro

NG

Self-Priming Pumps

Construction

Close-coupled self-priming shallow well jet pumps with built-in ejector.

NG: version with pump casing and lanter bracket in cast iron.
B-NG: version with pump casing and lanter bracket in bronze (the pumps are supplied fully painted).

Applications

For drawing water out of a well.
As pressure boosting pump for central water systems with low pressure (follow local specifications if increasing network pressure).
For clean liquids or slightly dirty surface water.
For garden use.
For washing with a jet of water.

Operating conditions

Liquid temperature up to 40 °C.
Ambient temperature up to 40 °C.
Maximum permissible working pressure up to 10 bar.
Continuous duty.

Motor

2-pole induction motor, 50 Hz (n ≈ 2900 rpm).
NG: three-phase 230/400 V ± 10%.
NGM: single-phase 230 V ± 10%, with thermal protector. Capacitor inside the terminal box.

Insulation class F.
Protection IP 54.
Classification scheme IE3 for three-phase motors from 0,75 kW.
Constructed in accordance with: EN 60034-1; EN 60034-30-1. EN 60335-1, EN 60335-2-41.

Materials

Components	NG	B-NG
Pump casing Cover with lantern bracket Diffuser plate	Cast iron GJL 200 EN 1561	Bronze G-Cu Sn 10 EN 1982
Impeller	Brass P- Cu Zn 40 Pb 2 UNI 5705	
Shaft	Cr steel 1.4104 EN 10088 (AISI 430) for NG 3-4	Cr-Ni-Mo steel 1.4401 EN 10088 AISI 316
	Cr-Ni steel 1.4305 EN 10088 (AISI 303) for NG 5-6-7	
Diffuser	PPO-GF20 (Noryl)	
Nozzle	PPO-GF20 (Noryl)	
Mechanical seal	Carbon - Ceramic - NBR	

Special features on request

- Other voltages. - Frequency 60 Hz (as per 60 Hz data sheet).
- Protection IP 55.
- Special mechanical seal

Characteristic curves for suction lift Hs = 1 m n ≈ 2900 rpm

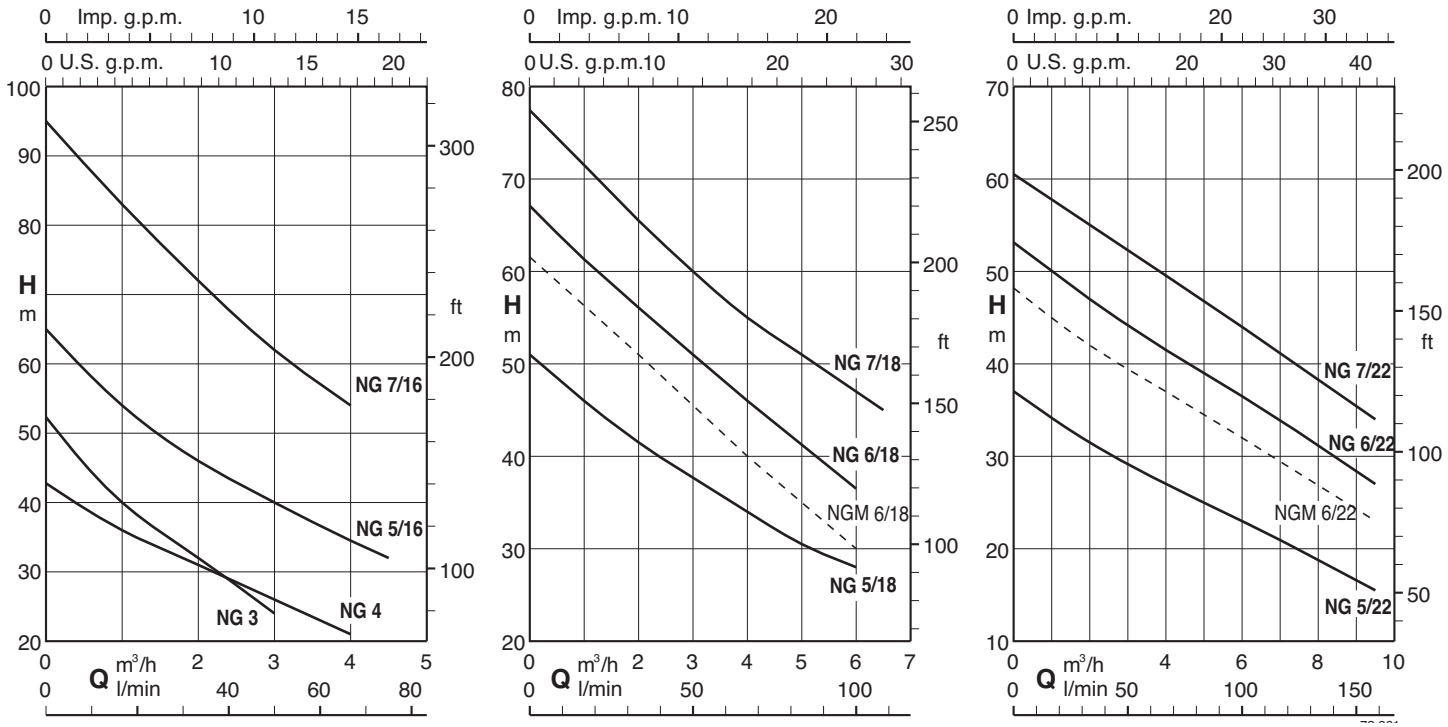

CALPEDA ROMANIA - INFINITY PUMPS SRL
Tel: 0268.33.47.47 / 0722.244.944
vanzari@calpeda.ro | www.calpeda.ro

NG

Self-Priming Pumps

Performance for suction lift Hs = 1 m **n ≈ 2900 rpm**

3 ~	230V	400V	1 ~	230V	P_1	P_2		Q m³/h	0,25	0,5	1	1,5	2	2,5	3	3,5	4	4,5	5	5,5	6	6,5	7	8	9	9,5
	A	A		A	kW	kW	HP	l/min	4,1	8,3	16,6	25	33,3	41,6	50	58,3	66,6	75	83,3	91,6	100	108	116	133	150	158
B- **NG 3/A**	3	1,7	B- **NGM 3/A**	4,5	0,9	0,55	0,75	H m	49	45,5	40	36	32	28	24											
B- **NG 4/B**	3,7	2,2	B- **NGM 4/A**	5,7	1	0,75	1		41	39	36	33	31	29	26	24	21									
B- **NG 5/16/A**	4,7	2,7	B- **NGM 5/16E**	7,4	1,64	1,1	1,5			59	54	50	46	43	40	37	34,5	32								
B- **NG 5/18/A**	4,7	2,7	B- **NGM 5/18E**	7,4	1,68	1,1	1,5			48,5	46	43,5	41,5	39,5	38	35,5	34	32	30,5	29	28					
B- **NG 5/22/A**	4,7	2,7	B- **NGM 5/22E**	7,4	1,55	1,1	1,5			35,5	34,5	33	31,5	30,5	29,5	28	27	26	25	23,5	23	21,5	20,5	18,5	16,5	15,5
B- **NG 6/18/A**	7,5	4,3				1,5	2			64,5	62	59	56	54	51	48,5	46	43,5	41,5	39	36,5					
			B- **NGM 6/18E**	9,2	2	1,5	2			59	57	54	51	48	45	43	40	37,5	35	33	30					
B- **NG 6/22/A**	7,5	4,3				1,5	2			51,5	50	48,5	47	46	44,5	43	41,5	40	39	37,5	36,5	35	33,5	31	28,5	27
			B- **NGM 6/22E**	9,2	2	1,5	2			47	45	43,5	42	41	40	38	37	36	35	33	32	31	30	27	24	23
B- **NG 7/16/B**	9,15	5,3				2,2	3			89	83	77	72	67	62	58	54									
B- **NG 7/18/B**	9,15	5,3				2,2	3			74,5	71,5	68,5	65,5	63	60	57,5	55	53	51	49	47	45				
B- **NG 7/22/B**	9,15	5,3				2,2	3			59	57,5	56,5	55	54	52,5	51	50	48,5	47	45,5	44	42,5	41,5	38	35	34

P_1 Max. power input. P_2 Rated motor power output. B-NG, B-NGM = Bronze construction. Tolerances according to UNI EN ISO 9906:2012

CALPEDA ROMANIA - INFINITY PUMPS SRL
Tel: 0268.33.47.47 / 0722.244.944
vanzari@calpeda.ro | www.calpeda.ro

NG

Self-Priming Pumps

Characteristic curves n ≈ 2900 rpm

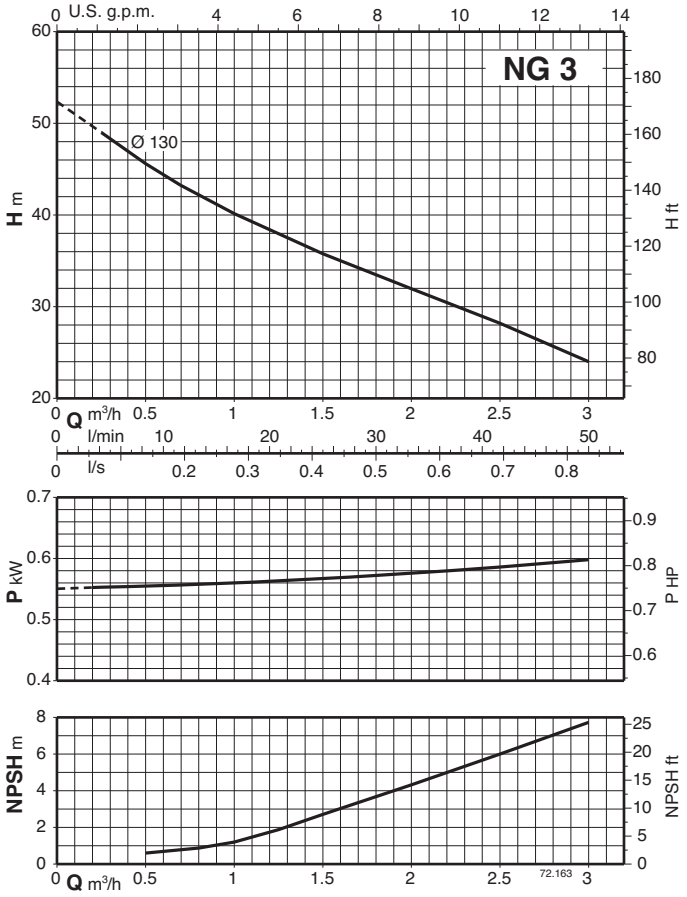

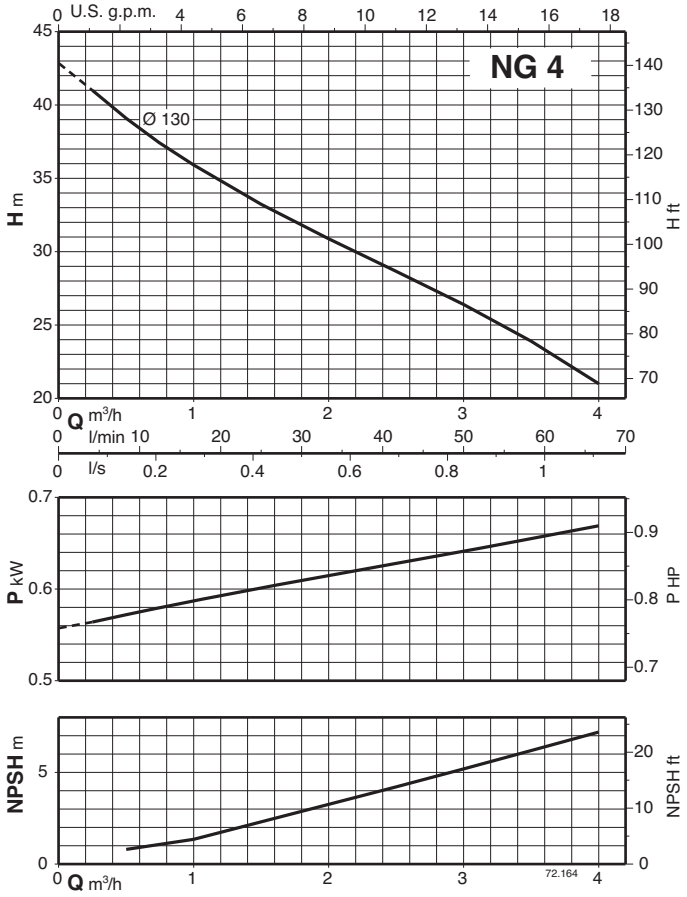

CALPEDA ROMANIA - INFINITY PUMPS SRL
Tel: 0268.33.47.47 / 0722.244.944
vanzari@calpeda.ro | www.calpeda.ro

NG

Self-Priming Pumps

Characteristic curves n ≈ 2900 rpm

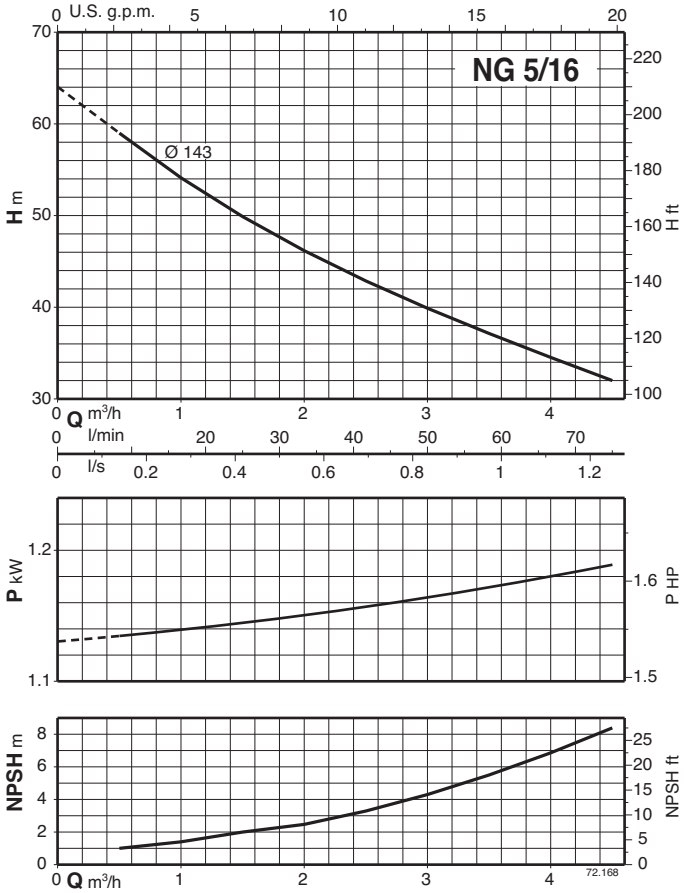

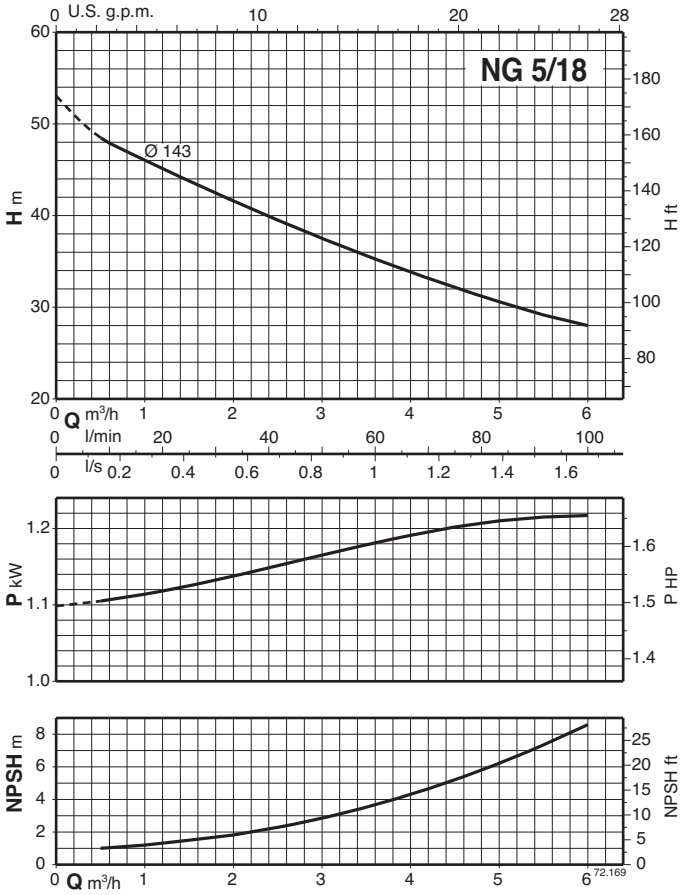

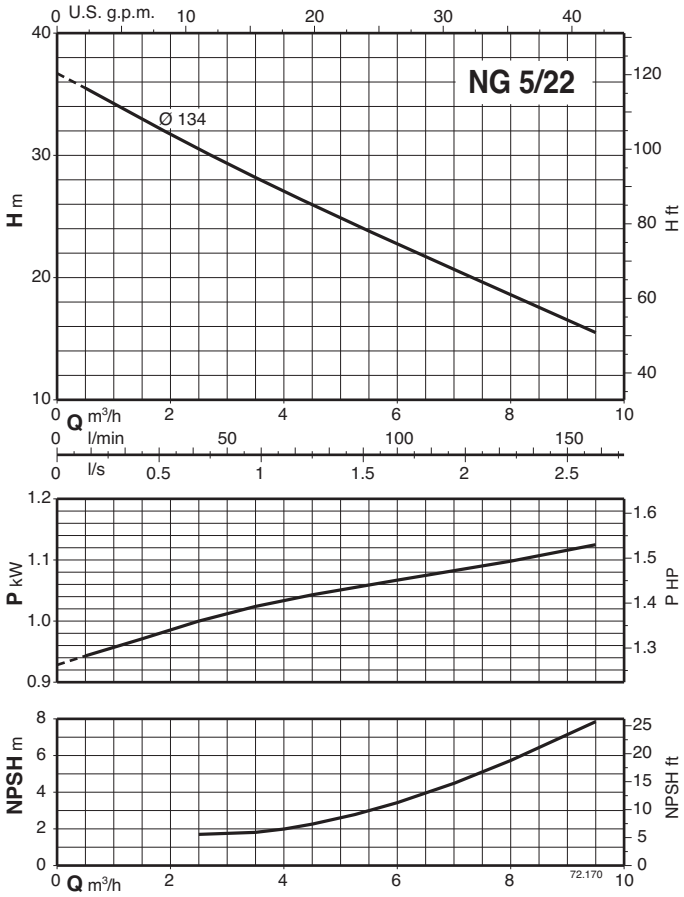

CALPEDA ROMANIA - INFINITY PUMPS SRL
Tel: 0268.33.47.47 / 0722.244.944
vanzari@calpeda.ro | www.calpeda.ro

NG

Self-Priming Pumps

Characteristic curves n ≈ 2900 rpm

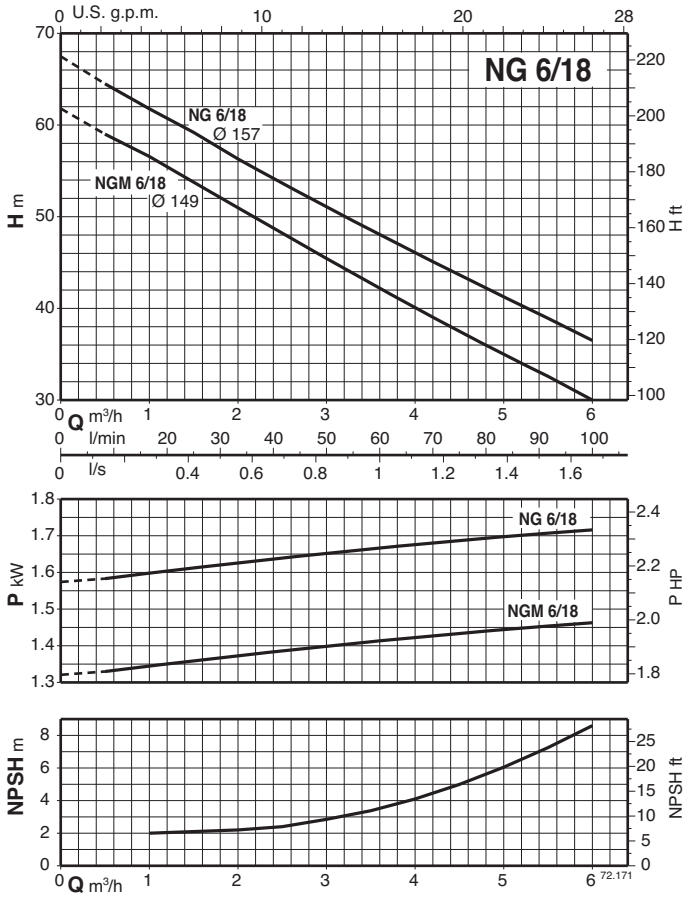

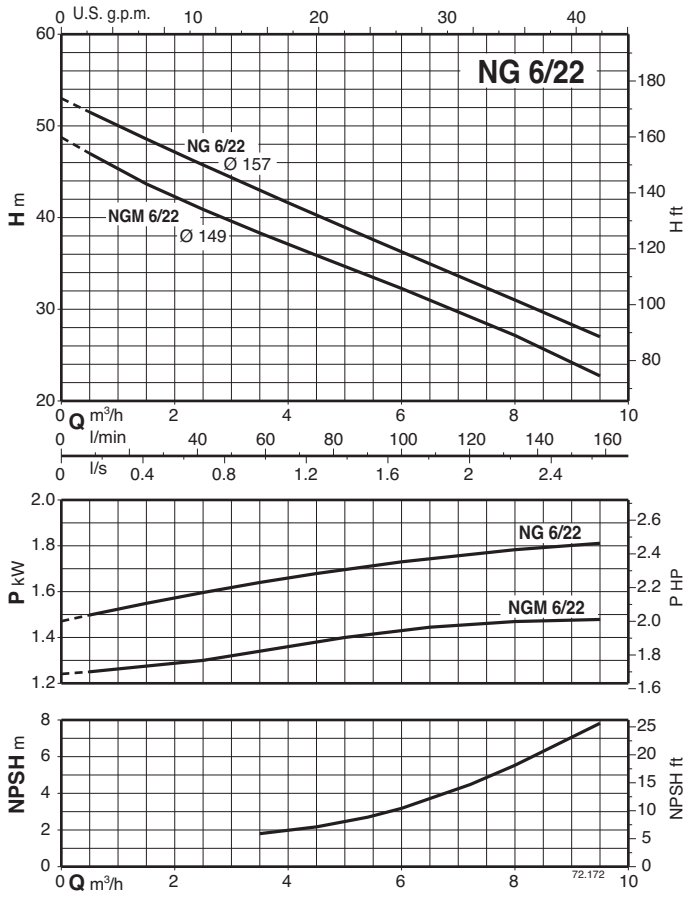

CALPEDA ROMANIA - INFINITY PUMPS SRL
Tel: 0268.33.47.47 / 0722.244.944
vanzari@calpeda.ro | www.calpeda.ro

NG

Self-Priming Pumps

Characteristic curves n ≈ 2900 rpm

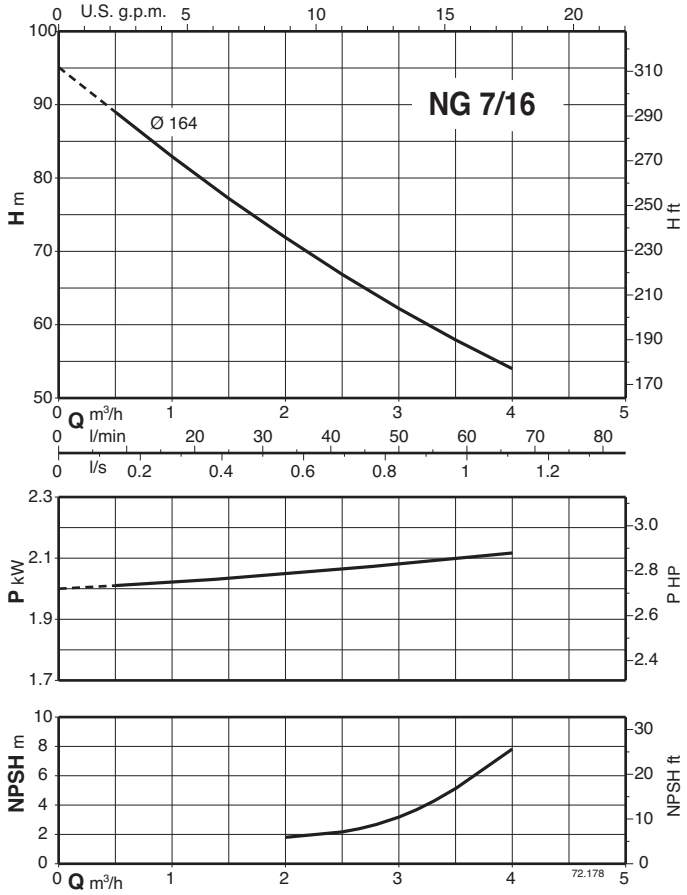

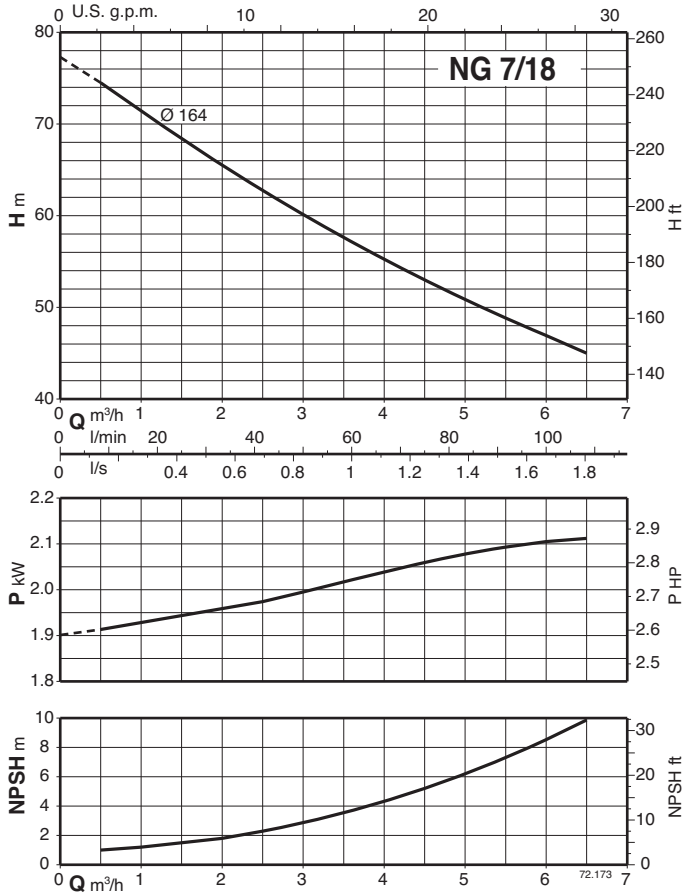

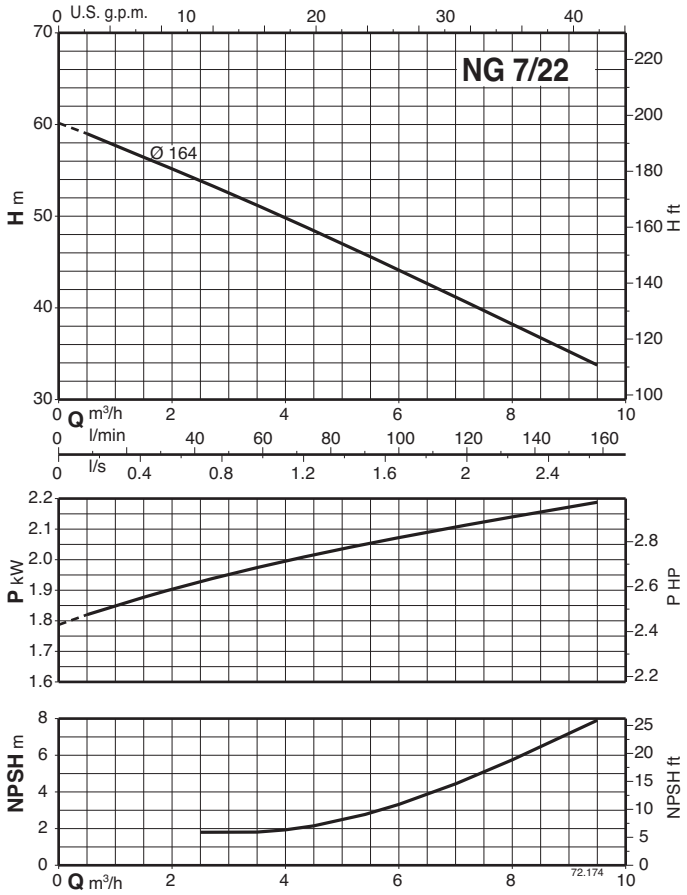

CALPEDA ROMANIA - INFINITY PUMPS SRL
Tel: 0268.33.47.47 / 0722.244.944
vanzari@calpeda.ro | www.calpeda.ro

NG Self-Priming Pumps

Dimensions and weights

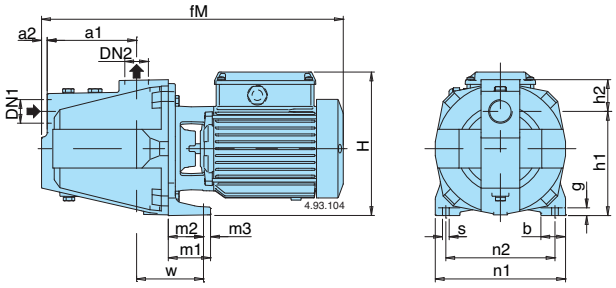

TYPE		DN1	DN2	mm															kg	
		ISO 228		a1	a2	fM	h1	h2	H	m1	m2	m3	n1	n2	b	s	w	g	**NG**	**B-NG**
NG 3/A	**B-NG 3/A**	G 1	G 1	127	8	430	150	43	207	60	52	8	185	155	35	9,5	100	11	18,4	20,8
NG 4/B	**B-NG 4/B**																		20,0	22,3
NG 5/A	**B-NG 5E**	G 1 1/2	G 1	160	10	560	165	57	240	60	50	10	215	175	40	11,5	115	11	29,2	31,6
NG 6/A	**B-NG 6E**					560													30,8	32,9
NG 7/B	**B-NG 7/A**					600													31,3	33,4

Installation examples

Positive suction head operation

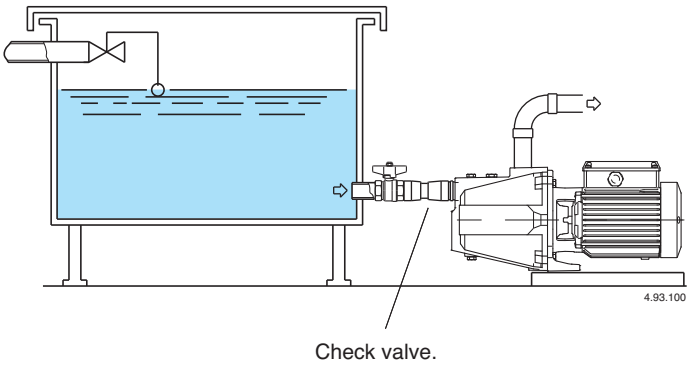

Suction lift operation

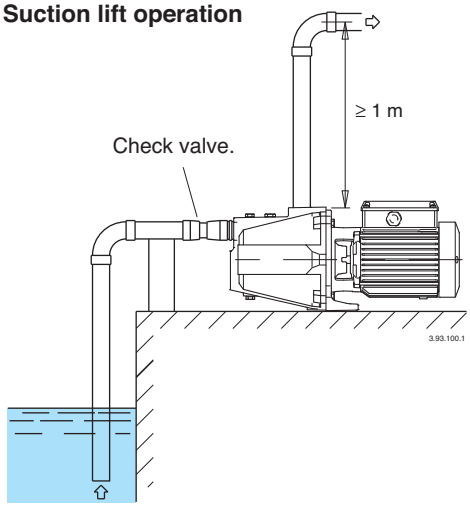

CALPEDA ROMANIA - INFINITY PUMPS SRL
Tel: 0268.33.47.47 / 0722.244.944
vanzari@calpeda.ro | www.calpeda.ro

Features

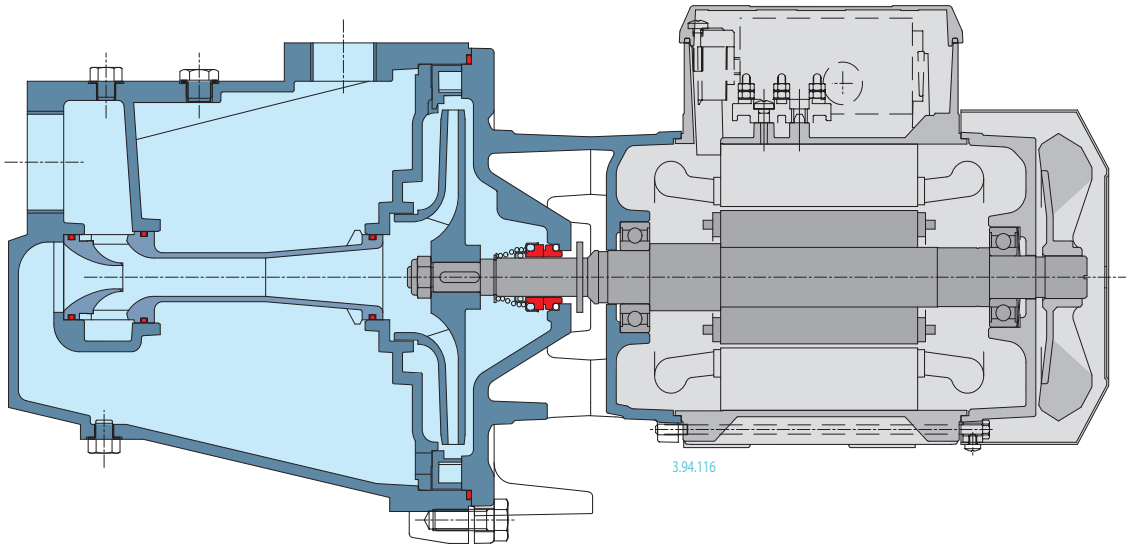

Robust
The mechanical structure of the hydraulic parts in contact with the pumped liquid are dimensioned to guarantee the maximum resistence to mechanical stress.

Self priming
The hydraulic design allows the pump to self prime even with the high suction lifts or with long suction pipe runs above the water level.

Flexible
The option to choose between cast iron and bronze materias for the hydraulic parts in contact with the pumped liquid allows NG series pumps to be selected for use with different types of liquids.

CALPEDA ROMANIA - INFINITY PUMPS SRL
Tel: 0268.33.47.47 / 0722.244.944
vanzari@calpeda.ro | www.calpeda.ro

MXA

Multi-Stage Self-Priming Pumps

Construction

Horizontal multi-stage, self-priming, close coupled pump.
Single-piece barrel casing in chrome-nickel stainless steel, with front suction port above pumps axis and radial delivery at top.
Stages in Noryl.

Applications

For water supply.
For domestic use, for garden use and irrigation.

Operating conditions

Liquid temperature: 0 °C to +35 °C.
Ambient temperature up to +40 °C.
Suction lift up to 8 m.
Maximum permissible pressure in the pump casing: 8 bar.
Continuous duty.

Motor

2-pole induction motor, 50 Hz (n ≈ 2800 rpm).
MXA: three-phase 230/400 V ± 10%.
MXAM: single-phase 230 V ± 10%, with thermal protector. Capacitor inside the terminal box.
Insulation class F.
Protection IP 54.
Classification scheme IE3 for three-phase motors from 0,75 kW.
Constructed in accordance with: EN 60034-1; EN 60034-30-1. EN 60335-1, EN 60335-2-41.

Materials

Component	Material
Pump casing Casing cover	Cr-Ni steel 1.4301 EN 10088 (AISI 304) Cr-Ni steel 1.4301 EN 10088 (AISI 304)
Pump Shaft	Chrome steel 1.4104 EN 10088 (AISI 430)
Plug	Cr-Ni steel 1.4305 EN 10088 (AISI 303)
Suction casing Stage casing Impeller	PPO-GF20 (Noryl) PPO-GF20 (Noryl) PPO-GF20 (Noryl)
Mechanical seal	Carbon - Ceramic - NBR

Special features on request

- Other voltages.
- Frequency 60 Hz (as per 60 Hz data sheet).
- Protection IP 55.

Characteristic curves n ≈ 2800 rpm

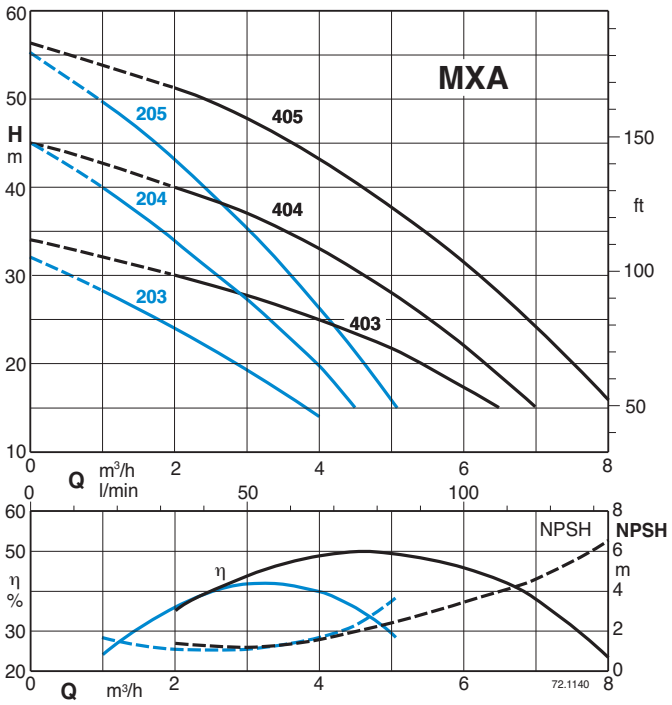

Self-priming capability

H_2O, T = 20°C,
Pa = 1000 hPa (mbar)
50 Hz (n ≈ 2800 1/min)

Hs (m) ≤	h (mm)					
	203	204	205	403	404	405
2	100	100	500	100	100	500
4	200	200	500	450	450	500
6	450	450	500	600	600	600
8	600	600	600	600	600	600

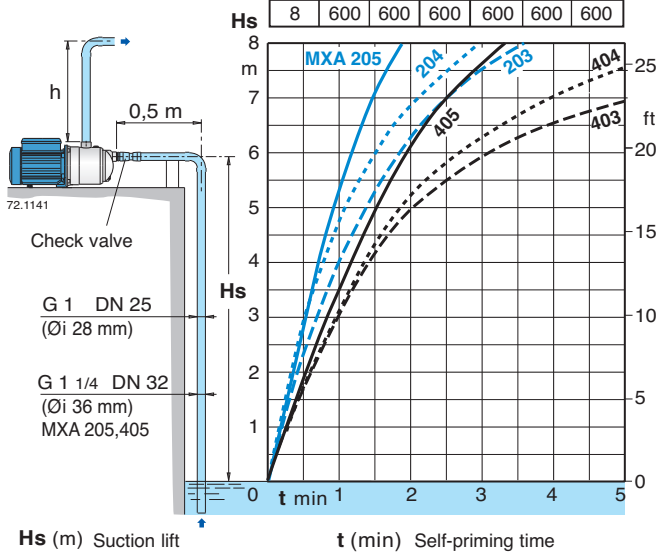

CALPEDA ROMANIA - INFINITY PUMPS SRL
Tel: 0268.33.47.47 / 0722.244.944
vanzari@calpeda.ro | www.calpeda.ro

MXA

Multi-Stage Self-Priming Pumps

Performance n ≈ 2800 rpm

3 ~	230 V	400 V	1 ~	230 V	P_1	P_2		Q m³/h	0	1	2	3	4	4,5	5		
	A	A		A	kW	kW	HP	l/min	0	16,6	33,3	50	66,6	75	83,3		
MXA 203	2,4	1,4	**MXAM 203**	3	0,63	0,45	0,6		32	28	24	19	14				
MXA 204/A	2,8	1,6	**MXAM 204/A**	4,2	0,8	0,55	0,75	**H** m	45	40	34	27	20	15			
MXA 205/B	3,5	2	**MXAM 205/A**	5,4	1	0,75	1		55,5	50	43	35,5	26,5	21,5	15,5		

3 ~	230 V	400 V	1 ~	230 V	P_1	P_2		Q m³/h	0	2	3	4	5	6	6,5	7	8
	A	A		A	kW	kW	HP	l/min	0	33,3	50	66,6	83,3	100	108,3	116,6	133,3
MXA 403/A	2,8	1,6	**MXAM 403/A**	4,2	0,9	0,55	0,75		34	30	28	25	22	17	15		
MXA 404/B	3,5	2	**MXAM 404/A**	5,4	1,2	0,75	1	**H** m	45	40	37	33	28	22	19	15	
MXA 405/A	4,5	2,6	**MXAM 405/A**	7	1,5	1,1	1,5		56	51	47,5	42,5	36,5	30	26,5	23	14

P_1 Max. power input.
P_2 Rated motor power output.

Test results with clean cold water, without gas content.
+ 0,5 m security margin on NPSH-value is necessary.

Tolerances according to UNI EN ISO 9906:2012
For capacities over 4 m³/h use a suction pipe G 1 1/4 (DN 32).

Dimensions and weights

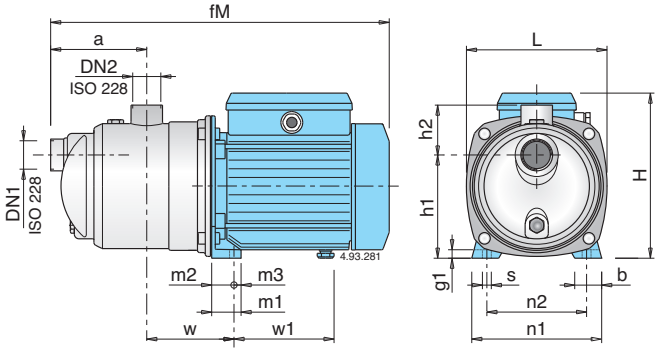

TYPE	DN1	DN2	Dimensions mm																Net weight kg	
	ISO 228		fM	a	w	h1	h2	H	L	m1	m2	m3	n1	n2	b	s	g1	w1	MXA	MXAM
MXA 203 - MXAM 203	G 1	G 1	362	115	95	116	61	176	161	33	25	8	146	112	30	9	10	102	6,6	6,7
MXA 204/A - MXAM 204/A	G 1	G 1	391	115	95	116	61	192	161	33	25	8	146	112	30	9	10	112	8,7	9,6
MXA 205/B - MXAM 205/A	G 1 1/4	G 1	462	140	113	152	68	225	213,5	37,5	28	9,5	185	155	33	9,5	11	147	13,3	13,8
MXA 403/A - MXAM 403/A	G 1	G 1	391	115	95	116	61	192	161	33	25	8	146	112	30	9	10	112	8,6	9,5
MXA 404/B - MXAM 404/A	G 1	G 1	391	115	95	116	61	192	161	33	25	8	146	112	30	9	10	112	9,5	10,5
MXA 405/A - MXAM 405/A	G 1 1/4	G 1	462	140	113	152	68	225	213,5	37,5	28	9,5	185	155	33	9,5	11	147	14,2	14,5

Features

Extra safety
against running dry, with the suction port above pump axis and with the self-priming construction.

Robust
Single-piece barrel casing.

Compact
Single-piece lantern bracket and base.

Low noise
with the water-filled shroud around the stages.

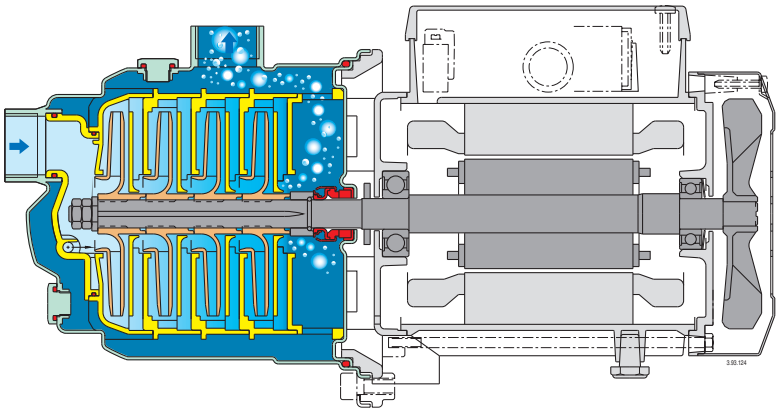

CALPEDA ROMANIA - INFINITY PUMPS SRL
Tel: 0268.33.47.47 / 0722.244.944
vanzari@calpeda.ro | www.calpeda.ro

I, IR Gear Pumps

Construction

Close-coupled gear pumps (rotary pumps).
Pump casing with suction and delivery connections with the same diameter and on the same axis (in-line execution).

Applications

For fuel oil and liquids with lubricating properties.

Operating conditions

Kinematic viscosity from 30 mm^2/s (4°E) to 120 mm^2/s (15°E).
Liquid temperature up to 90 °C.
Ambient temperature up to 40 °C.
Total suction lift up to 4 m.
Continuous duty.

Motor

4-pole induction motor, 50 Hz (n ≈ 1450 rpm).

I, IR, IRR: three-phase 230/400 V ± 10%.
IM: single-phase 230 V ± 10%.

Insulation class F.
Protection IP 54.
Classification scheme IE3 for three-phase motors from 0,75 kW.
Constructed in accordance with: EN 60034-1; EN 60034-30-1.
EN 60335-1, EN 60335-2-41.

Materials

Components	Materials
Pump casing	Cast iron GJL 200 EN 1561
Gears	Steel 18 Ni Cr Mo 5 UNI 8550
Shafts	Steel 18 Ni Cr Mo 5 UNI 8550
Radial shaft seal ring	FPM

Special features on request

- Other voltages.
- Frequency 60 Hz (as per 60 Hz data sheet).
- Protection IP 55.
- Higher ambient temperatures.

Performance n ≈ 1450 rpm

3 ~		230 V	400 V	1 ~	230 V	P_1	P_2		n	Q	m^3/h	0,6
		A	A		A	kW	kW	HP	rpm		l/min	10
I	**25/4/A**	1,4	0,8	**IM25/4/A**	2,1	0,4	0,25	0,34	1450	Δp bar		2
IR	**25/4/A**	2,1	1,2				0,37	0,5	1450			2,5
IRR	**25/4/B**	3,3	1,9				0,75	1	1450			5

P_1 Max. power input. P_2 Rated motor power output. Δp Differential pressure.

CALPEDA ROMANIA - INFINITY PUMPS SRL
Tel: 0268.33.47.47 / 0722.244.944
vanzari@calpeda.ro | www.calpeda.ro

I, IR Gear Pumps

Dimensions and weights

I 25/4/A: 10 kg
IM 25/4/A: 11,7 kg
IR 25/4/A: 11,6 kg

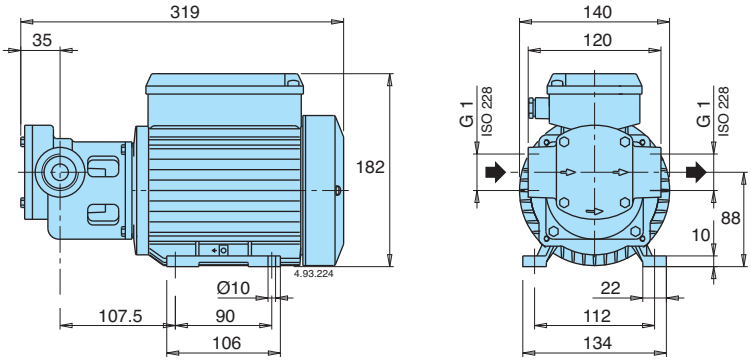

IRR 25/4/B: 17,6 kg

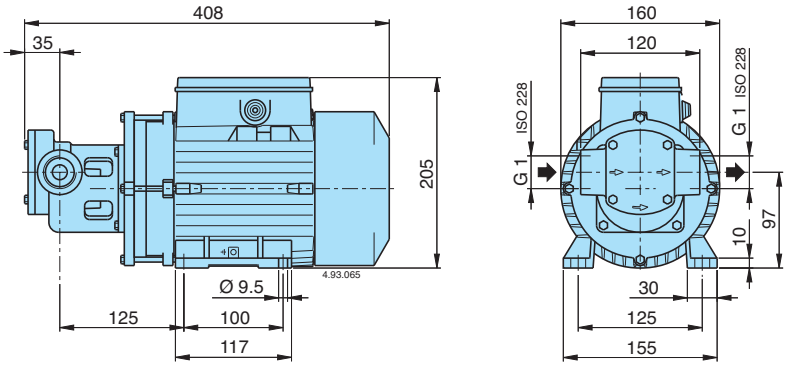

Features

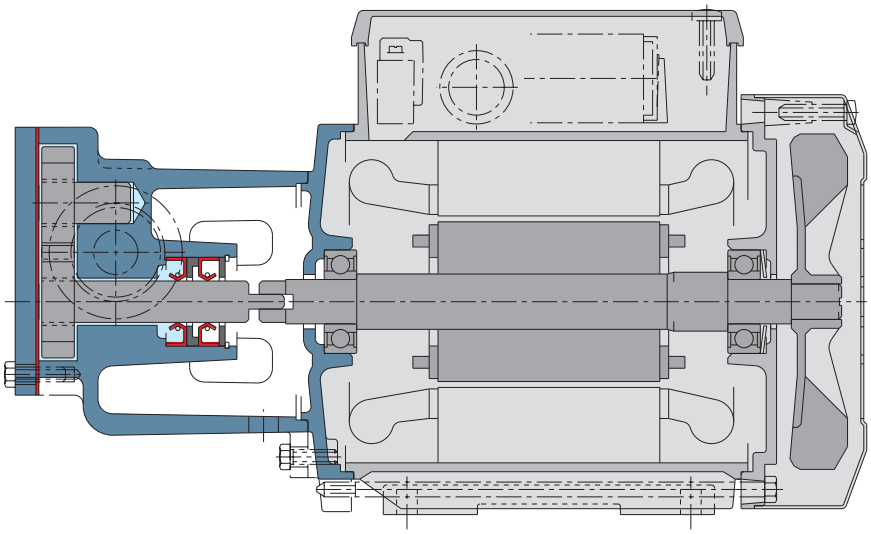

Innovative structure

The flanged pump casing and two piece shaft allows the hydraulics to be disassembled easier, facilitating quick maintenance operations.

CALPEDA ROMANIA - INFINITY PUMPS SRL
Tel: 0268.33.47.47 / 0722.244.944
vanzari@calpeda.ro | www.calpeda.ro

VAL, SC

Vertical Submerged Pumps

Construction

Vertical column sump pumps, with motor in dry installation and with pump body submerged in the liquid handled (without suction line or foot valve).

Impeller - VAL: free-flow impeller (vortex or recessed impeller).
- SC: open impeller.

Connection - VAL 30, SC 30, SC 50: threaded port ISO 228 (BS 2779).
- VAL 65: flange with plain face oval threaded counter-flange UNI 2245, PN 2,5.

Applications

For draining a basin or a sump with domestic or industrial sewage.
For slightly dirty waste water, for liquids which are non-aggessive for the pump materials.

Operating conditions

Liquid temperature up to 40 °C.
Ambient temperature up to 40 °C.
Continuous duty.
Maximum size of solids: VAL 30 = 25 mm; VAL 65 = 50 mm; SC 30 = 3 mm; SC 50 = 6 mm.

Motor

2-pole induction motor, 50 Hz (n ≈ 2900 rpm).
VAL -SC: three-phase 230/400 V ± 10%.
VALM-SCM: single-phase 230 V ± 10%, with thermal protector.
Insulation class F.
Protection IP 54.
Classification scheme IE3 for three-phase motors from 0,75 kW.
Constructed in accordance with: EN 60034-1; EN 60034-30-1. EN 60335-1, EN 60335-2-41.

Materials

Components	VAL	SC
Pump casing Lower bearing housing*	Cast iron GJL 200 EN 1561	Cast iron GJL 200 EN 1561
Impeller	Brass P-Cu Zn 40 Pb 2 UNI 5705 for VAL 30	Brass P-Cu Zn 40 Pb 2 UNI 5705
	Cast iron GJL 200 EN 1561 for VAL 65	
Shaft	Steel C 40 UNI 7231	
Bearing bush	Tecnopolymer	
Shaft sleeve	Chromate bronze for VAL 65	–

* Not existing for VAL 30.

Special features on request

- Other voltages.
- Frequency 60 Hz (as per 60 Hz data sheet).
- Protection IP 55.
- Bronze bearing bush (for liquid up to 100 °C).

Characteristic curves n ≈ 2900 rpm

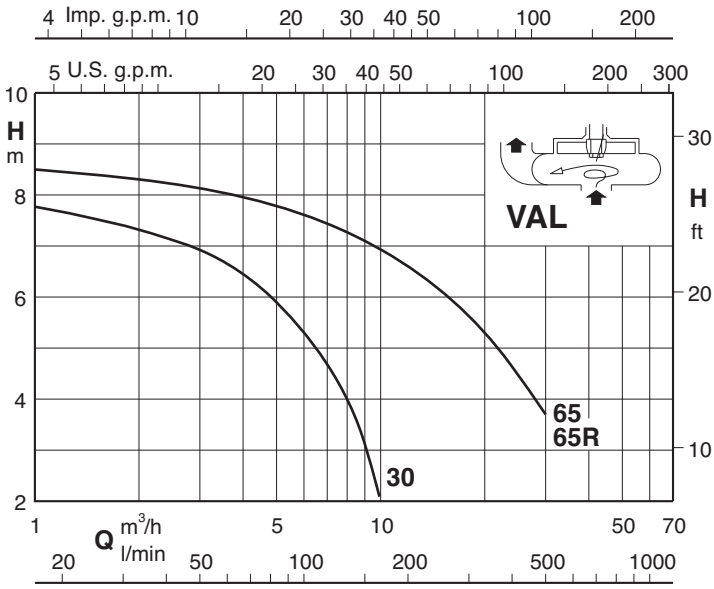

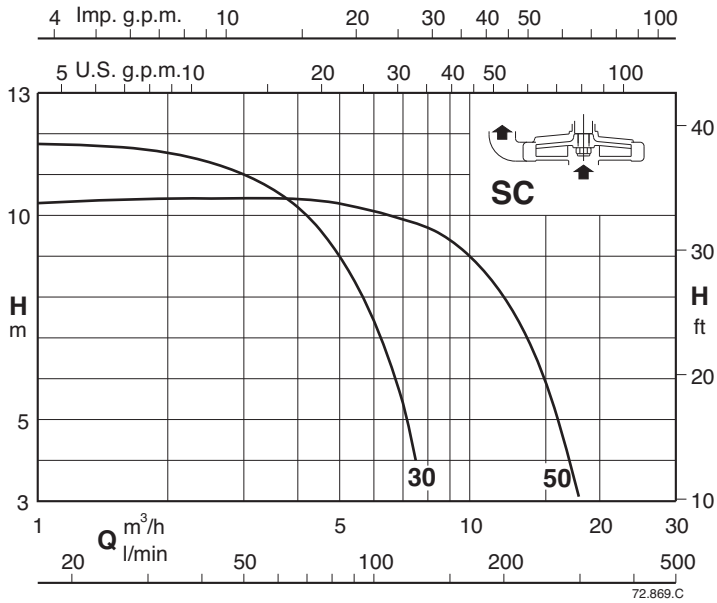

CALPEDA ROMANIA - INFINITY PUMPS SRL
Tel: 0268.33.47.47 / 0722.244.944
vanzari@calpeda.ro | www.calpeda.ro

VAL, SC

Vertical Submerged Pumps

calpeda

Performance n ≈ 2900 rpm

3 ~	230V	400V	1 ~	230V	P1	P2		Q m³/h	3	3,5	4	4,5	5	5,5	6	6,5	7	7,5	8	9	10	12	14	16	18	20	25	30
	A	A		A	kW	kW	HP	l/min	50	58,3	66,6	75	83,3	91,6	100	108	116	125	133	150	166	200	233	266	300	333	416	500
VAL 30/A	2,3	1,3	**VALM 30/A**	3,6	0,63	0,45	0,6	**H** m		6,7	6,5	6,2	5,9	5,6	5,3	5	4,7	4,3	4	3	2							
VAL 65/A	7,5	4,3				1,5	2													7,1	6,9	6,6	6,3	6	5,6	5,3	4,5	3,7
VAL 65-R/B	9,15	5,3				2,2	3													7,1	6,9	6,6	6,3	6	5,6	5,3	4,5	3,7
SC 30/A	2,3	1,3	**SCM 30/A**	2,8	0,47	0,37	0,5		11	10,6	10,2	9,6	9	8,3	7,4	6,5	5,4	4										
SC 50/A	2,3	1,3	**SCM 50/A**	3,6	0,69	0,45	0,6						10,3	10,2	10,1	10	9,9	9,8	9,7	9,4	9	8	6,7	5	3			

P1 Max. power input. P2 Rated motor power output. **H** Total head in m. Tolerances according to UNI EN ISO 9906:2012

Dimensions and weights

VAL 30
SC 30
SC 50

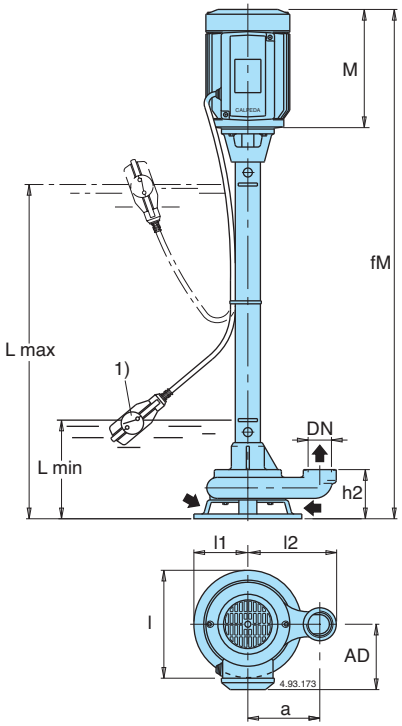

VAL 65
VAL 65-R

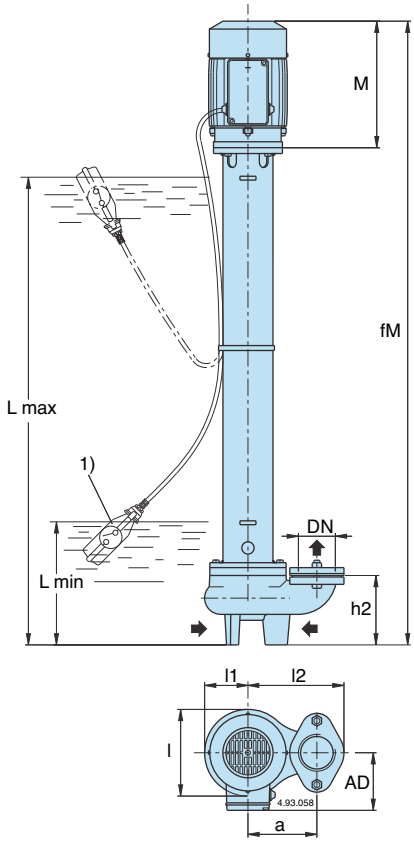

1) Float switch (on demand)

TYPE	DN ISO 228	mm fM	M	h2	AD	a	L min	L max	l	l1	l2	kg
VAL 30/750/A	G 1 ¼	1025	200	82	111	120	150	750	180	90	148	17,8
VAL 30/1000/A		1275						1000				19,5
VAL 65/1000/A	G 2 ½	1245	235	140	135	140	250	950	175	88	195	40
VAL 65/1500/A		1745						1450				48
VAL 65/2000/A		2245						1950				56
VAL 65/2500/A		2745						2450				64
VAL 65/1000-R/B	G 2 ½	1285	275	140	135	140	250	950	175	88	195	43
VAL 65/1500-R/B		1785						1450				51
VAL 65/2000-R/B		2285						1950				59
VAL 65/2500-R/B		2785						2450				67
SC 30/500/A	G 1 ¼	765	200	105	111	100	200	455	132	65	127	17,4
SC 30/750/A		1015						705				19,6
SC 30/1000/A		1265						955				21,8
SC 30/1250/A		1515						1205				24
SC 50/500/A	G 2	780	200	120	111	120	215	470	173	86	157	18,5
SC 50/750/A		1030						720				20,7
SC 50/1000/A		1280						970				22,9
SC 50/1250/A		1530						1220				25,1

CALPEDA ROMANIA - INFINITY PUMPS SRL
Tel: 0268.33.47.47 / 0722.244.944
vanzari@calpeda.ro | www.calpeda.ro

VAL, SC

Vertical Submerged Pumps

Characteristic curves n ≈ 2900 rpm

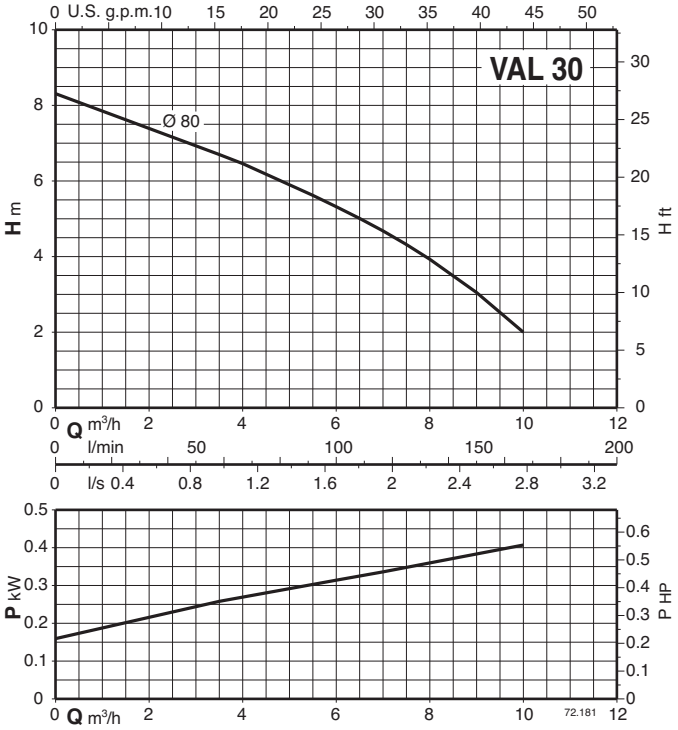

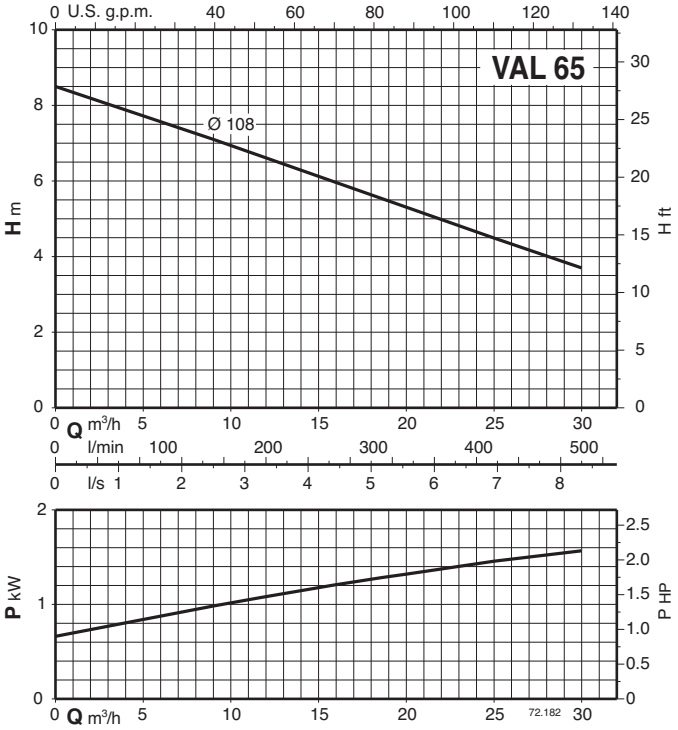

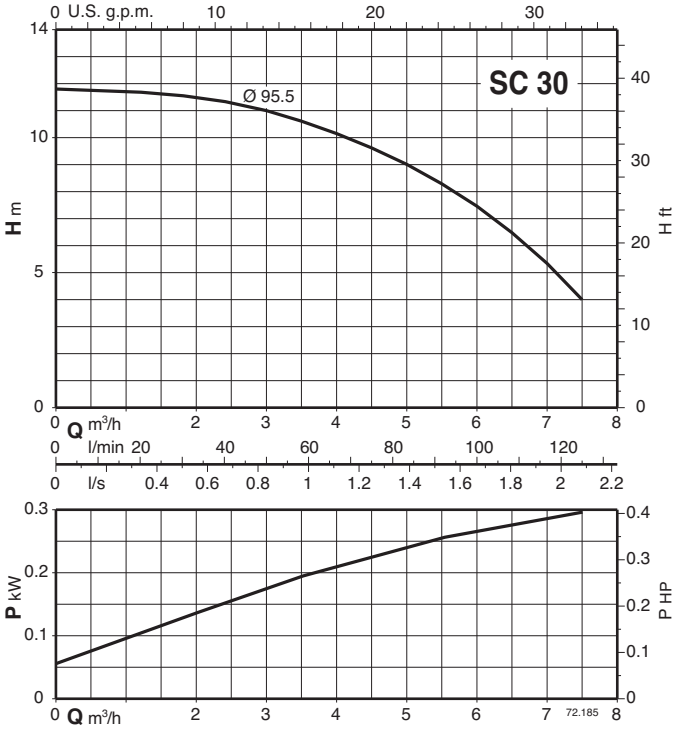

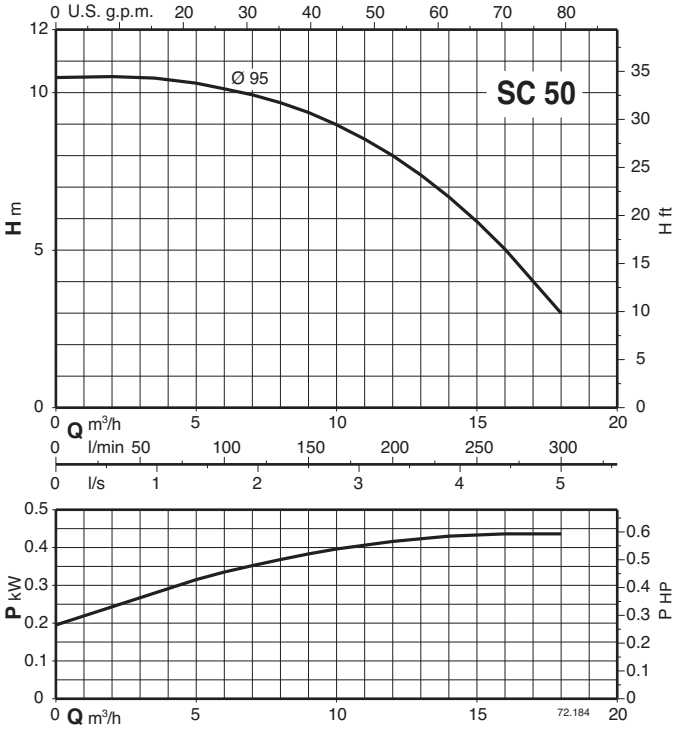

CALPEDA ROMANIA - INFINITY PUMPS SRL
Tel: 0268.33.47.47 / 0722.244.944
vanzari@calpeda.ro | www.calpeda.ro

VAL, SC

Vertical Submerged Pumps

Features

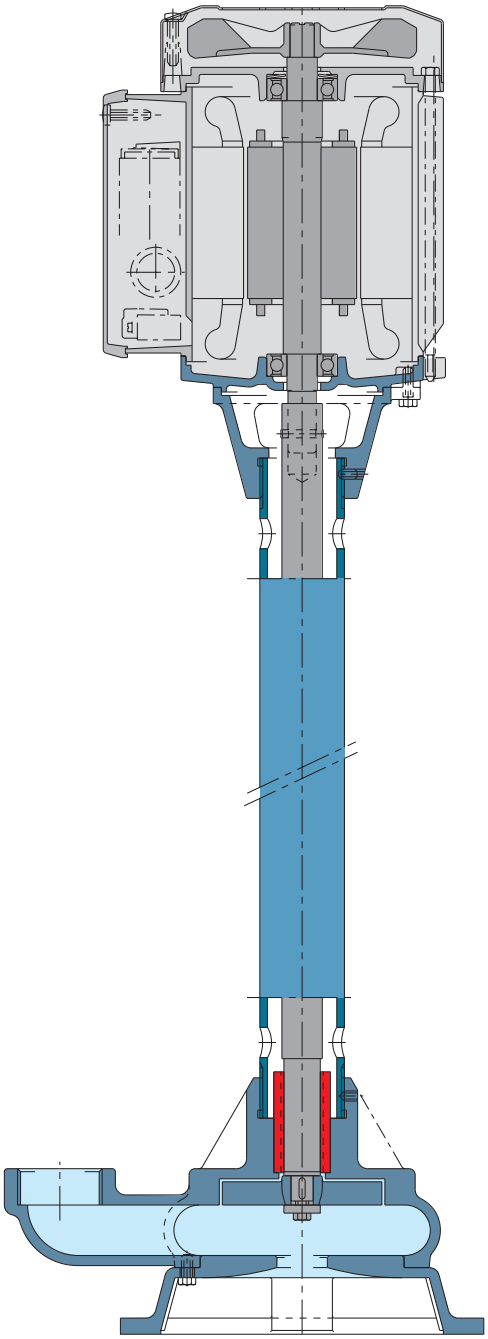

Range
The high number of pumps in the range can meet the widest range of services required by the user.

Construction with no mechanical seal
The absence of a mechanical seal minimizes the need for maintenance of the pumps.

Float switch
The pumps can be fitted with a float switch, eliminating the need for level control systems.

CALPEDA ROMANIA - INFINITY PUMPS SRL
Tel: 0268.33.47.47 / 0722.244.944
vanzari@calpeda.ro | www.calpeda.ro

GM 10

Submersible Drainage Pump

Construction

Submersible drainage pump constructed with composite polymers developed especially for this product.
These new rustproof materials are resistant to corrosion, indeformable at maximum temperature differentials in the pump and motor and resistant to internal and external strain.

Shaft of chrome steel AISI 430. Three lip seals in NBR.

With float switch for automatic start/stop.

Applications

For clean or slightly dirty water.
For draining flooded rooms or tanks.
Extraction of water from ponds, flowing water or pits for collection of rain water. For irrigation purposes.
For use outdoor, the power supply cable shall have a length not less than 10 m.

Operating conditions

Maximum liquid temperature for prolonged use: 35 °C (with immersed motor).
Immersion depth: 5 m max (with suitable cable length).
Not suitable for continuous duty for prolonged time.

Motor

2-pole induction motor, 50 Hz (n ≈ 2900 rpm).
Single-phase 230 V ± 10%, with thermal protector.
Capacitor inserted in the housing incorporated in the plug.
Cable: with plug, length 5 m, 245IEC57 4 G 0,75 mm², according to EN 60335-2-41 for pumps up to 5 kg.
Insulation class B.
Protection IP X8.
Triple impregnation humidity-proof dry winding.

Special features on request

Other voltages.
Frequency 60 Hz (as per 60 Hz data sheet).
Cable H07RN8-F, 4 G 1 mm², length 10 m, without plug.
Control box with capacitor, for pumps with cable without plug.
Without float switch.
With elbow on discharge port.
Motor suitable for operation with frequency converter.

Characteristic curve and performance n ≈ 2900 rpm

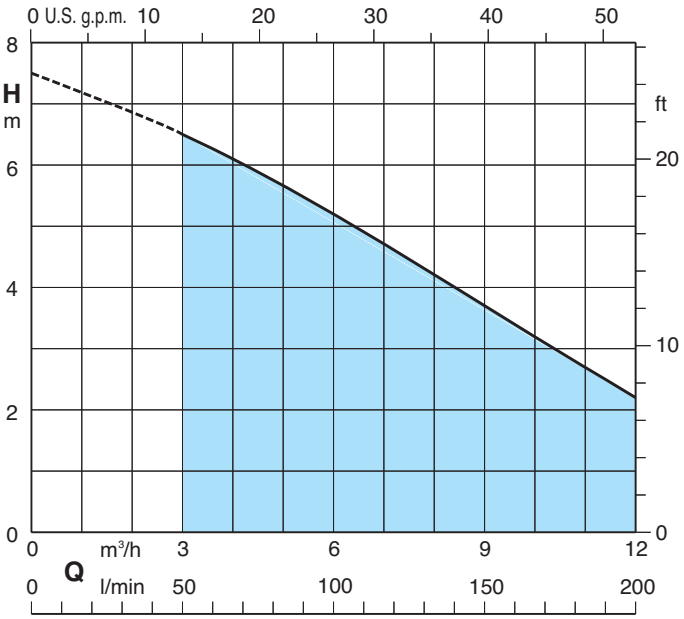

1~	230V	Capacitor		P1	P2		Q m³/h	0	3	6	9	12
	A	μF	V	kW	kW	HP	l/min	0	50	100	150	200
GM 10	1,75	6,3	450	0,4	0,3	0,4	**H** m	7,5	6,5	5,2	3,7	2,2

P1 Max. power input
P2 Rated motor power output
H Total head in m

CALPEDA ROMANIA - INFINITY PUMPS SRL
Tel: 0268.33.47.47 / 0722.244.944
vanzari@calpeda.ro | www.calpeda.ro

GM 10

Submersible Drainage Pump

Dimensions and weights

Weight kg 5

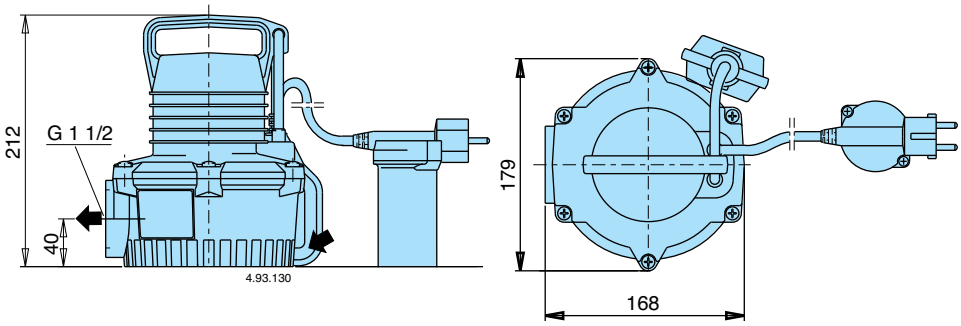

Control box (on request)

Type	Capacitor		Weight
QM 10	6,3 µF	450 V	0,4 kg

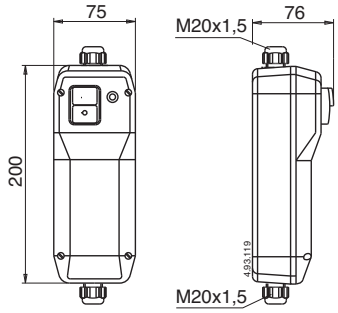

Installation examples

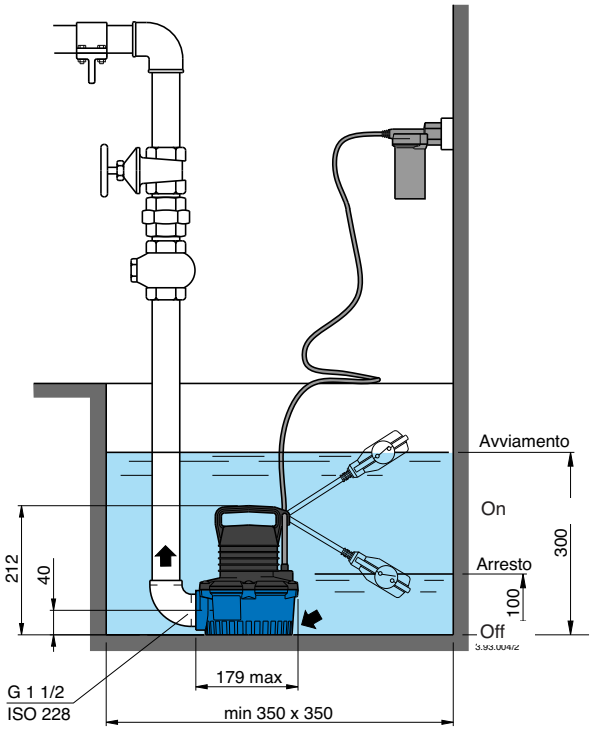

Low cost installation

Immersed without suction pipe and valve. No filling operations at start-up, no suction problems and greater safety against running dry.

Features

Maximum reliability

A metal support ensures correct alignment between the pump shaft and the motor also in heavy duty conditions.
A threaded metallic insert in the delivery port allows for secure connection of the delivery pipe or fitting without any risk of damaging the pump.
A suction strainer prevents solids bigger than 8 mm grain size from entering the pump.

Compact

Minimum dimension and high levels of performance, for use in many different applications, for flow rates up to 200 liters/min.

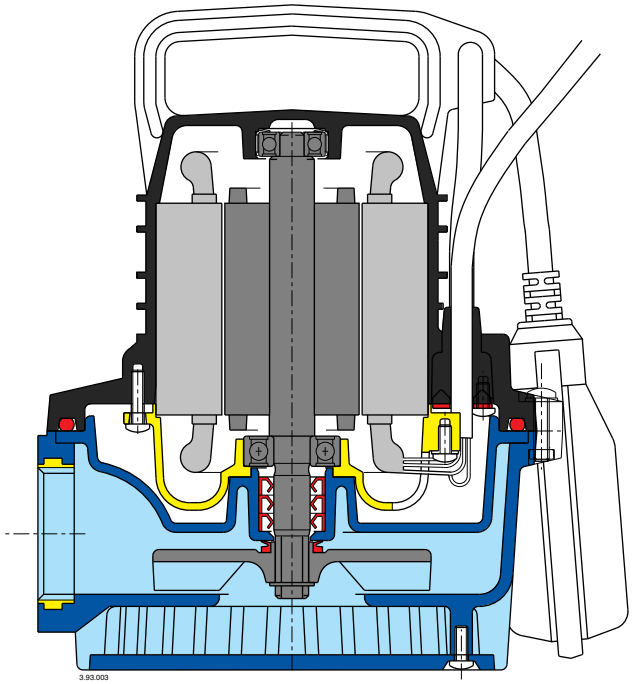

CALPEDA ROMANIA - INFINITY PUMPS SRL
Tel: 0268.33.47.47 / 0722.244.944
vanzari@calpeda.ro | www.calpeda.ro

GXR, GXV

Submersible Pumps in stainless steel

Construction

Single-impeller submersible pumps in chrome-nickel stainless steel, with vertical delivery port.
GXR: with open impeller.
GXV: with free-flow (vortex) impeller.
Motor cooled by the pumped water passing between the motor jacket and the external jacket.
Double shaft seal with oil chamber.

Applications

GXR:
- For clean water containing solids up to 10 mm grain size.
- For draining rooms or or emptying tanks.
- Extraction of water from ponds, streams or pits and for rainwater collection.
- For irrigation purposes.

GXV:
- For clean or slightly dirty water, containing solids up to 25 mm grain size.
- Particularly suitable for liquids with a high solid content.

For outdoor use a power supply cable of not less than 10 m should be used in accordance with: EN 60 335-2-41.

Operating conditions

Liquid temperature up to 50° C.
Maximum immersion depth: 5 m.
Minimum water level with float: GXR = 70 mm, GXV = 130 mm.
Minimum water level manual operation: GXR = 15 mm, GXV = 30 mm.
Continuous duty.

Materials

Component	Material
Pump casing Strainer Impeller Motor jacket Pump jacket	Chrome-nickel steel 1.4301 EN 10088 (AISI 304)
Handle	Polypropylene
Shaft	Chrome-nickel steel 1.4305 EN 10088 (AISI 303)
Mechanical seal	Ceramic alumina/Carbon/NBR
Seal lubrication oil	Oil for food/pharmaceutical machinery

Motor

2-pole induction motor, 50 Hz (n ≈ 2900 rpm).
GXR, GXV: three-phase 230 V ± 10%;
three-phase 400 V ± 10%;
GXRM, GXVM: single-phase 230 V,
with float switch and thermal protector.
Incorporated capacitor.

Insulation class F.
Protection IP X8 (for continuous immersion)
Double impregnation humidity-proof dry winding.
Constructed in accordance with: EN 60034-1;
EN 60335-1, EN 60335-2-41.

Other features on request

- Other voltages. - Frequency 60 Hz. - Other mechanical seal. - Cable length 10 m.
- Vertical magnetic float switch. - Motor suitable for operation with frequency converter.

Characteristic curves n ≈ 2900 rpm

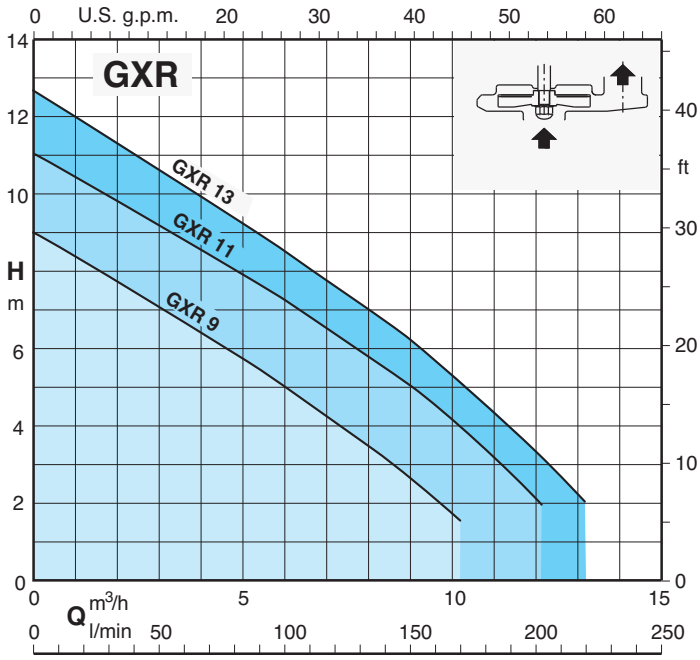

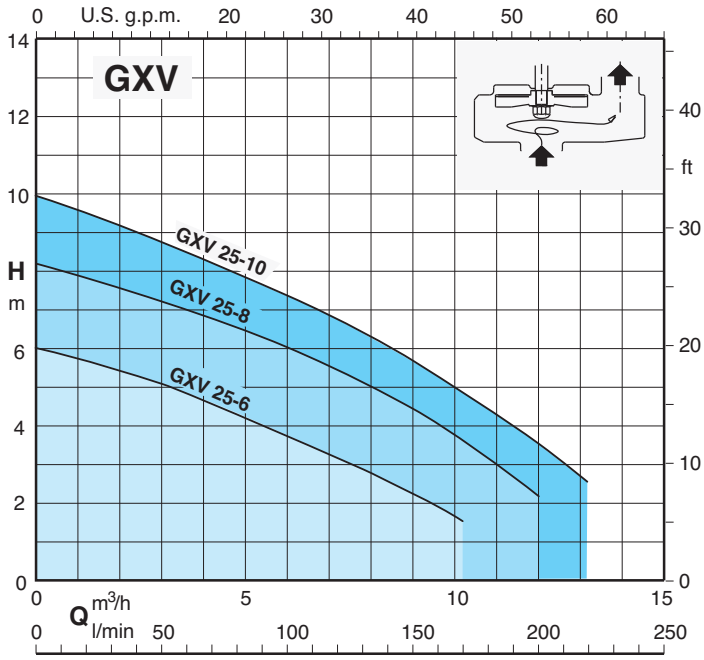

CALPEDA ROMANIA - INFINITY PUMPS SRL
Tel: 0268.33.47.47 / 0722.244.944
vanzari@calpeda.ro | www.calpeda.ro

GXR, GXV

Submersible Pumps in stainless steel

Performance n ≈ 2900 rpm

3~	230V	400V	1~	230V	Capacitor		P1	P2		Q m³/h	0	1,2	3	4,5	6	7,5	9	10,2	12	13,2
	A	A		A	µf	Vc	kW	kW	HP	l/min	0	20	50	75	100	125	150	170	200	220
GXR 9	1,6	0,9	**GXRM 9**	2,5	8	450	0,5	0,25	0,33		9	8,3	7	6	4,8	3,6	2,5	1,7		
GXR 11	2,3	1,3	**GXRM 11**	3,5	12,5	450	0,7	0,37	0,5	**H** m	11	10,4	9,5	8,5	7,5	6,5	5,3	4,2	2,2	
GXR 13	2,8	1,6	**GXRM 13**	4,5	16	450	0,95	0,45	0,6		12,7	11,7	10,7	9,7	8,5	7,3	6,3	5,2	3,2	2

3~	230V	400V	1~	230V	Capacitor		P1	P2		Q m³/h	0	1,2	3	4,5	6	7,5	9	10,2	12	13,2
	A	A		A	µf	Vc	kW	kW	HP	l/min	0	20	50	75	100	125	150	170	200	220
GXV 25-6	1,6	0,9	**GXVM 25-6**	2,5	8	450	0,5	0,25	0,33		6	5,7	5,2	4,5	3,8	3	2,2	1,5		
GXV 25-8	2,3	1,3	**GXVM 25-8**	3,5	12,5	450	0,7	0,37	0,5	**H** m	8,2	7,8	7,2	6,7	6,1	5,4	4,5	3,6	2,2	
GXV 25-10	2,8	1,6	**GXVM 25-10**	4,5	16	450	0,95	0,45	0,6		10	9,5	8,7	8	7,3	6,5	5,7	4,9	3,7	2,6

P1 Max. power input. P2 Rated motor power output. Density ρ = 1000 kg/m³. Kinematic viscosity ν = max 20 mm²/sec.

Tolerances according to UNI EN ISO 9906:2012

Pump type	Power supply cable				Float switch	
	Cable material	Section	Length	Plug CEE 7(VII)	Cable material	Section
GXRM 9 GXVM 25-6	H05RN-F	3G0,75 mm²	5 m	YES	H07RN-F	3G1 mm²
GXRM 11, 13 GXVM 25-8, 25-10	H07RN-F	3G1 mm²	5 m	YES	H07RN-F	3G1 mm²
GXR 9 GXV 25-6	H05RN-F	4G0,75 mm²	5 m	NO	NO	-
GXR 11, 13 GXV 25-8, 25-10	H07RN-F	4G1 mm²	5 m	NO	NO	-

Dimensions and weights

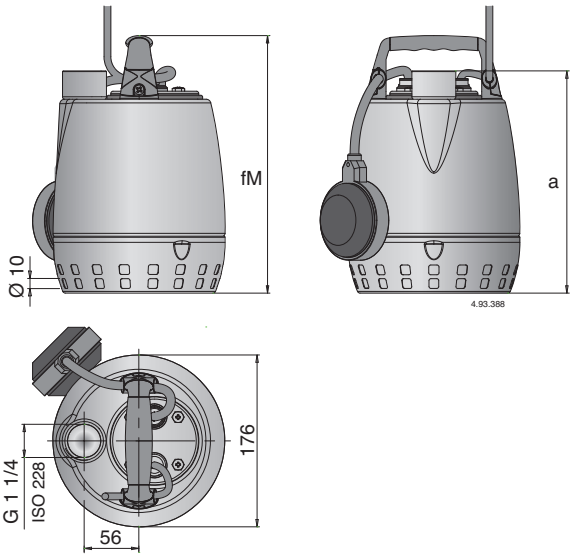

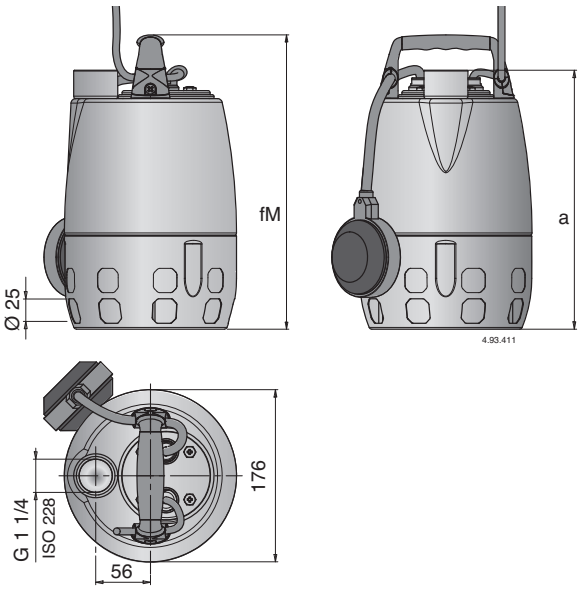

TYPE	Dimensions mm		(1) kg	
	fM	a	GXR	GXRM
GXR 9 - GXRM 9	265	230	5	5,2
GXR 11 - GXRM 11	300	265	6,2	6,5
GXR 13 - GXRM 13	300	265	6,7	7,2

(1) With cable length: 5 m

TYPE	Dimensions mm		(1) kg	
	fM	a	GXV	GXVM
GXV 25-6 - GXVM 25-6	302	267	5,1	5,3
GXV 25-8 - GXVM 25-8	337	302	6,3	6,6
GXV 25-10 - GXVM 25-10	337	302	6,8	7,3

(1) With cable length: 5 m

CALPEDA ROMANIA - INFINITY PUMPS SRL
Tel: 0268.33.47.47 / 0722.244.944
vanzari@calpeda.ro | www.calpeda.ro

GXR, GXV

Submersible Pumps in stainless steel

Installation examples

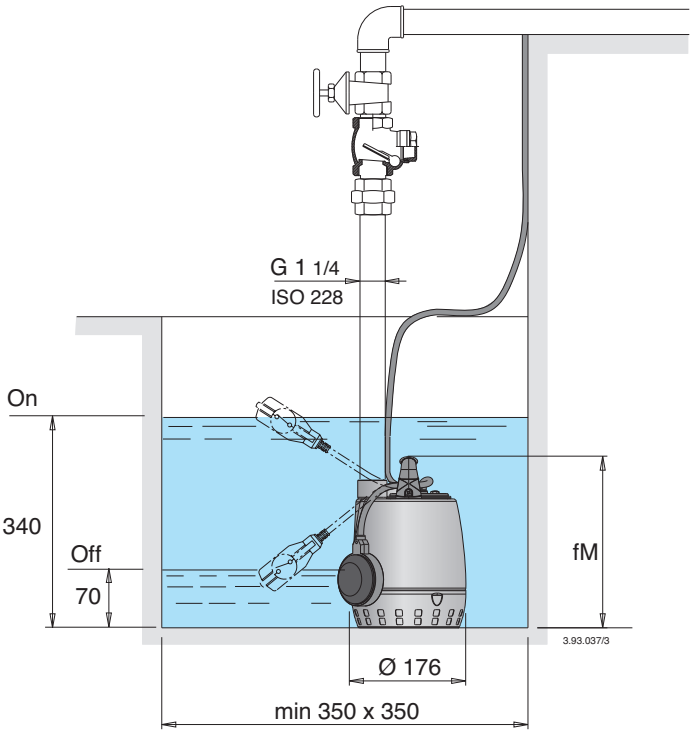

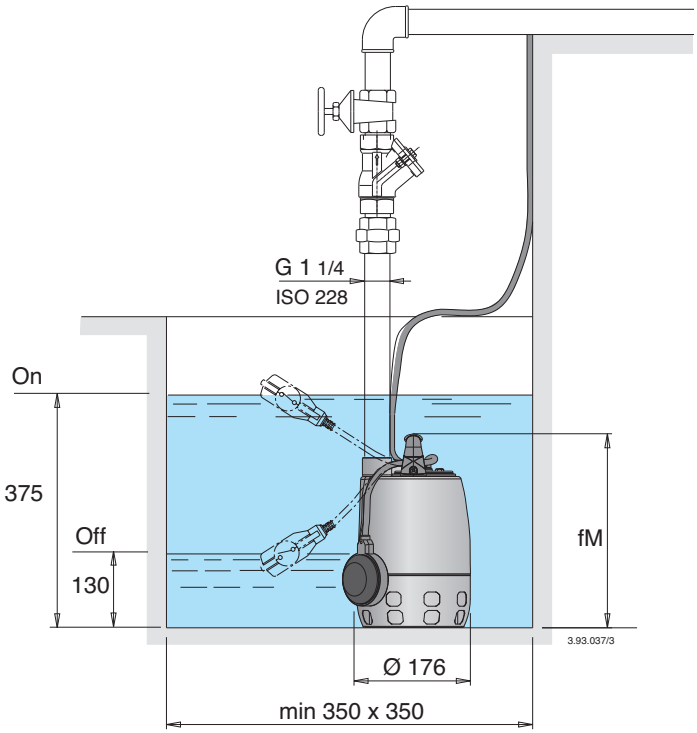

Installation examples with vertical magnetic float switch

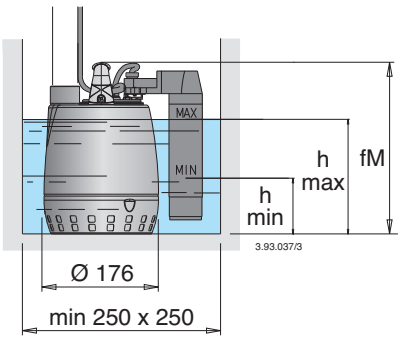

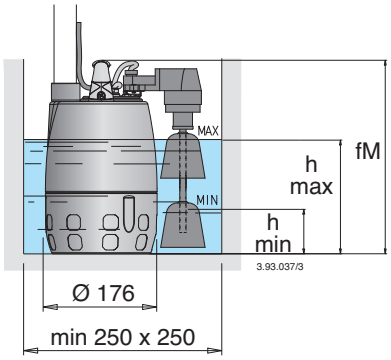

TYPE	mm		
	fM	h min	h max
GXRM 9 GF	265	100	190
GXRM 11 GF	300	135	225
GXRM 13 GF	300	135	225

TYPE	mm		
	fM	h min	h max
GXVM 25-6 GFA	302	70	150
GXVM 25-8 GFA	337	70	185
GXVM 25-10 GFA	337	70	185

CALPEDA ROMANIA - INFINITY PUMPS SRL
Tel: 0268.33.47.47 / 0722.244.944
vanzari@calpeda.ro | www.calpeda.ro

GXR, GXV

Submersible Pumps in stainless steel

Features

PATENTED

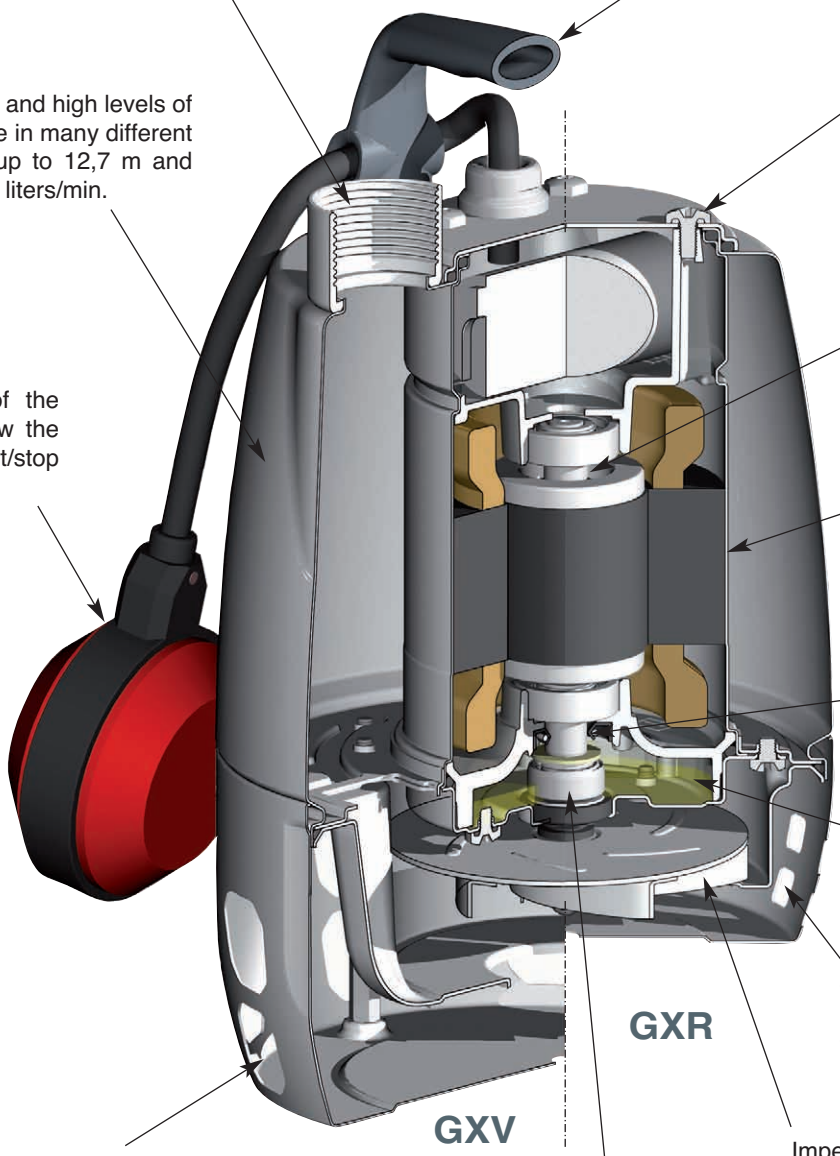

G 1 1/4 vertical, upward delivery port for installation in small pits, without the need for an elbow on the pump.

Handle in polypropylene.

Easy inspection of the capacitor area.

Minimum dimension and high levels of performance, for use in many different applications, head up to 12,7 m and flow rates up to 220 liters/min.

Shaft in chrome-nickel stainless steel.

Easy adjustment of the float switch: to allow the adjustement of start/stop pump levels.

Motor cooled by the pumped water passing between the motor jacket and the external jacket.

Ceramic stainless steel shaft sleeve.

Oil chamber.

Suction strainer with a double row of holes, for extra safety against clogging.
GXR: it allows the passage of solids up to 10 mm.

Impeller in chrome-nickel stainless steel.

Suction strainer with a double row of holes, for extra safety against clogging.
GXV: it allows the passage of solids up to 25 mm.

The double shaft seal with oil chamber separates the motor from the water and provides further protection against accidental operation when dry.

CALPEDA ROMANIA - INFINITY PUMPS SRL
Tel: 0268.33.47.47 / 0722.244.944
vanzari@calpeda.ro | www.calpeda.ro

GXR 12

Submersible Pumps in stainless steel

Construction

Single-impeller submersible pumps in chrome-nickel stainless steel, with vertical delivery port.
GXR: with open impeller.
Motor cooled by the pumped water passing between the motor jacket and the external jacket.
Double shaft seal with oil chamber.

Applications

- For clean water containing solids up to 12 mm grain size.
- For draining rooms or emptying tanks.
- Extraction of water from ponds, streams or pits and for rainwater collection.
- For irrigation purposes.

For outdoor use a power supply cable of not less than 10 m should be used in accordance with: EN 60335-2-41.

Operating conditions

Liquid temperature up to 40° C.
Maximum immersion depth: 5 m.
Minimum water level with float: 70 mm,.
Minimum water level manual operation: 15 mm.
Continuous duty.

Motor

2-pole induction motor, 50 Hz (n ≈ 2900 rpm).
GXR: three-phase 230 V ± 10%;
three-phase 400 V ± 10%;
Cable: H07RN-F, 4G1 mm², length 10 m, without plug.
GXRM: single-phase 230 V,
with float switch and thermal protector.
Incorporated capacitor.
Cable: H07RN-F, 3G1 mm² (3G1,5 mm² for 1,1 kW, 3G2,5 mm² for 1,5 kW), length 10 m, with plug CEI-UNEL 47166.
Insulation class F.
Protection IP X8 (for continuous immersion)
Double impregnation humidity-proof dry winding.
Constructed in accordance with: EN 60034-1;
EN 60335-1, EN 60335-2-41.

Materials

Component	Material
Pump casing Strainer Impeller Motor jacket Pump jacket	Chrome-nickel steel 1.4301 EN 10088 (AISI 304)
Handle	Polypropylene (with frame in AISI 304)
Shaft	Chrome-nickel steel 1.4301 EN 10088 (AISI 304)
Mechanical seal: upper lower	Ceramic alumina/Carbon/NBR
Seal lubrication oil	Oil for food/pharmaceutical machinery

Other features on request

- Other voltages. - Frequency 60 Hz.
- Other mechanical seal. - Cable length 20 m.
- Vertical magnetic float switch.
- Motor suitable for operation with frequency converter.
- Three-phase pumps with incorporated float switch.

Characteristic curves n ≈ 2900 rpm

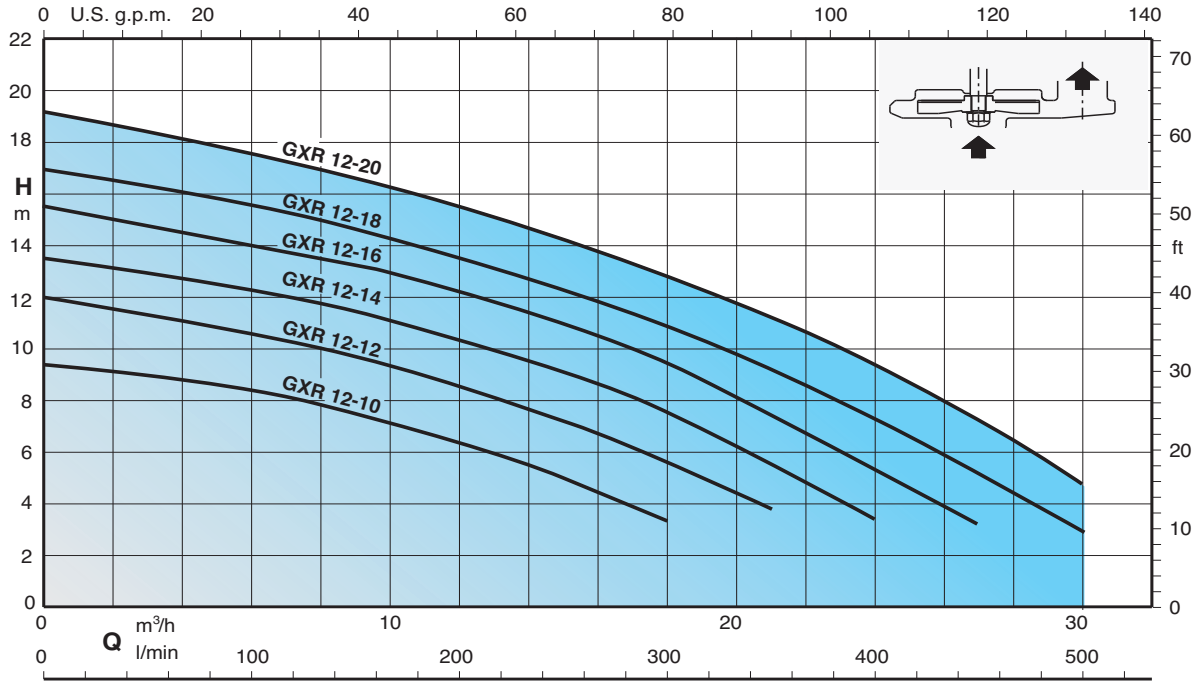

CALPEDA ROMANIA - INFINITY PUMPS SRL
Tel: 0268.33.47.47 / 0722.244.944
vanzari@calpeda.ro | www.calpeda.ro

GXR 12

Submersible Pumps in stainless steel

Performance n ≈ 2900 rpm

3~	230V	400V	1~	230V	Capacitor		P1	P2		Q m³/h	0	3	6	9	12	15	18	21	24	27	30
	A	A		A	µf	Vc	kW	kW	HP	l/min	0	50	100	150	200	250	300	350	400	450	500
GXR 12-10	2,6	1,5	**GXRM 12-10**	4	12,5	450	0,85	0,45	0,6	**H** m	9,3	9	8,3	7,5	6,3	5	3,3	-	-	-	-
GXR 12-12	3,3	1,9	**GXRM 12-12**	5,2	16	450	1,1	0,55	0,75		12	11,3	10,6	9,6	8,5	7,2	5,6	3,7	-	-	-
GXR 12-14	3,8	2,2	**GXRM 12-14**	6	20	450	1,3	0,75	1		13,5	13	12,2	11,4	10,4	9	7,5	5,6	3,3	-	-
GXR 12-16	4,8	2,8	**GXRM 12-16**	7,4	25	450	1,6	0,9	1,2		15,5	14,7	14	13,2	12,2	11	9,4	7,5	5,4	3,2	-
GXR 12-18	5,8	3,3	**GXRM 12-18**	9,5	30	450	2	1,1	1,5		17	16,3	15,5	14,6	13,5	12,3	10,8	9,2	7,3	5,2	3
GXR 12-20	6,9	4	**GXRM 12-20**	13	35	450	2,2	1,5	2		19,2	18,4	17,5	16,5	15,5	14,2	12,8	11,2	9,3	7,2	4,7

P_1 Max. power input. P_2 Rated motor power output. Density ρ = 1000 kg/m³. Kinematic viscosity ν = max 20 mm²/sec.

Tolerances according to UNI EN ISO 9906:2012

Dimensions and weights

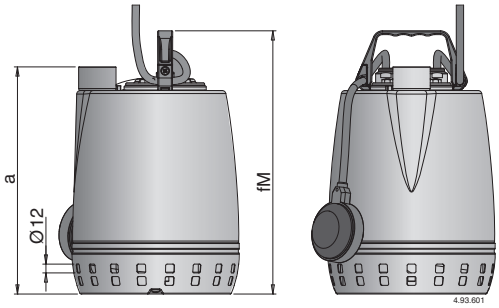

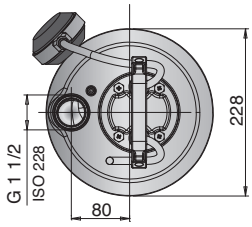

TYPE	mm		kg (1)	
	fM	a	GXR	GXRM
GXR 12-10 - GXRM 12-10	360	310	10,3	11,3
GXR 12-12 - GXRM 12-12	375	325	11,5	12,5
GXR 12-14 - GXRM 12-14	400	350	13	14
GXR 12-16 - GXRM 12-16	400	350	13,6	14,6
GXR 12-18 - GXRM 12-18	420	370	14,4	15,9
GXR 12-20 - GXRM 12-20	450	400	16	17,5

(1) With cable length: 10 m

CALPEDA ROMANIA - INFINITY PUMPS SRL
Tel: 0268.33.47.47 / 0722.244.944
vanzari@calpeda.ro | www.calpeda.ro

GXR 12

Submersible Pumps in stainless steel

Installation examples

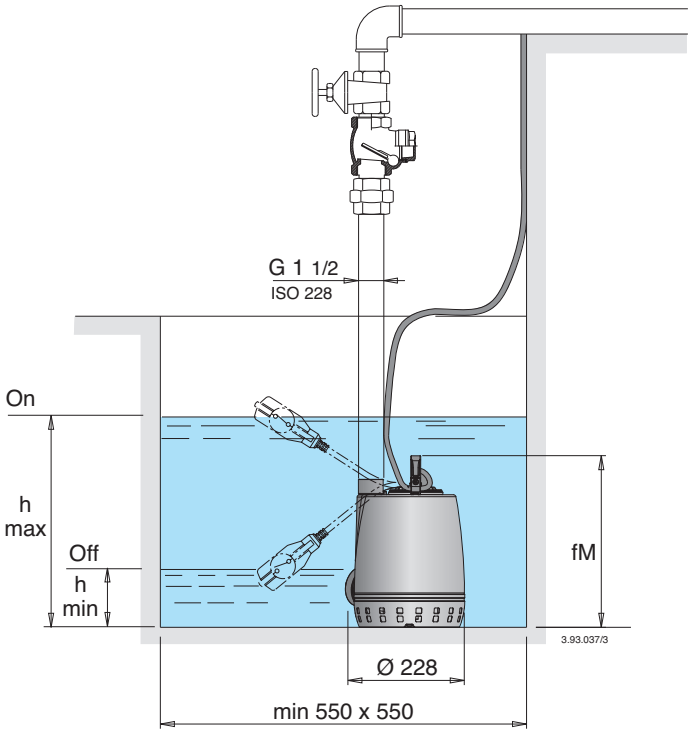

TYPE	mm		
	fM	h min	h max
GXR 12-10 - GXRM 12-10	360	175	435
GXR 12-12 - GXRM 12-12	375	190	450
GXR 12-14 - GXRM 12-14	400	215	475
GXR 12-16 - GXRM 12-16	400	215	475
GXR 12-18 - GXRM 12-18	420	235	495
GXR 12-20 - GXRM 12-20	450	265	525

Installation examples with vertical magnetic float switch

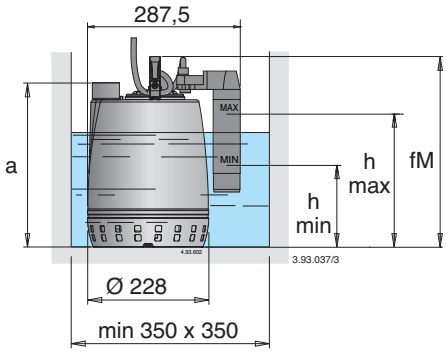

TYPE	mm			
	fM	a	h min	h max
GXRM 12-10 GF	360	310	180	270
GXRM 12-12 GF	375	325	195	285
GXRM 12-14 GF	400	350	220	310
GXRM 12-16 GF	400	350	220	310

CALPEDA ROMANIA - INFINITY PUMPS SRL
Tel: 0268.33.47.47 / 0722.244.944
vanzari@calpeda.ro | www.calpeda.ro

GXR 12

Submersible Pumps in stainless steel

Features

PATENTED

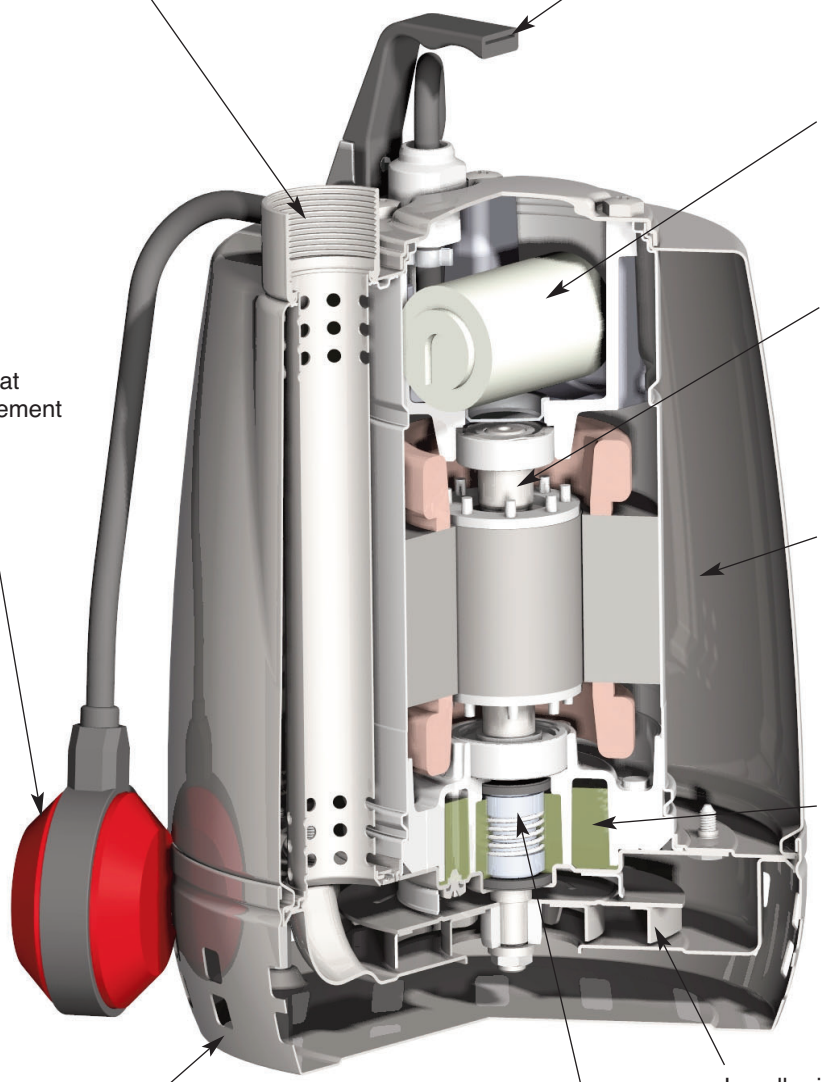

CALPEDA ROMANIA - INFINITY PUMPS SRL
Tel: 0268.33.47.47 / 0722.244.944
vanzari@calpeda.ro | www.calpeda.ro

GQR Submersible Drainage Pumps

PATENTED

Construction

Single-impeller submersible drainage pump, with open impeller.
GQR: with vertical threaded delivery port (G 1 1/2).
GQR 10 32: with horizontal flanged and threaded delivery port (DN 32, PN 6 - G 1 1/2).
Double mechanical shaft seal with interposed oil chamber, to protect against dry-running.

Applications

For clean water containing solids up to 10 mm grain size.
For draining rooms or or emptying tanks.
Extraction of water from ponds, streams or pits and for rainwater collection.
For irrigation purposes.

Operating conditions

Liquid temperature up to 35° C.
Maximum immersion depth: 5 m.
Minimum immersion depth: 205 mm.
Continuous duty (with submerged motor).

Motor

2-pole induction motor, 50 Hz (n ≈ 2900 rpm).
GQR: three-phase 230 V ± 10%;
three-phase 400 V ± 10%;.
Cable: H07RN-F, 4G1 mm², length 10 m, without plug.
GQRM: single-phase 230 V ± 10%,
with float switch and thermal protector.
Incorporated capacitor.
Cable: H07RN-F, 3G1 mm², length 10 m, with plug CEI-UNEL 47166.
Insulation class F.
Protection IP X8 (for continuous immersion)
Triple impregnation humidity-proof dry winding.
Constructed in accordance with: EN 60034-1;
EN 60335-1, EN 60335-2-41.

Materials

Component	Material
Pump casing Impeller	Cast iron GJL 200 EN 1561
Strainer Motor jacket Jacket cover Casing cover	Chrome-nickel steel 1.4301 EN 10088 (AISI 304)
Handle	Polypropylene (with frame in AISI 304)
Shaft	Chrome-nickel steel 1.4301 EN 10088 (AISI 304)
Mechanical seal: upper lower	Ceramic alumina/Carbon/NBR
Seal lubrication oil	Oil for food/pharmaceutical machinery

Other features on request

- Other voltages. - Frequency 60 Hz (as per 60 Hz data sheet).
- Other mechanical seal.
- Cable length 20 m.
- Vertical magnetic float switch.
- Motor suitable for operation with frequency converter.
- Three-phase pumps with incorporated float switch.

Characteristic curves n ≈ 2900 rpm

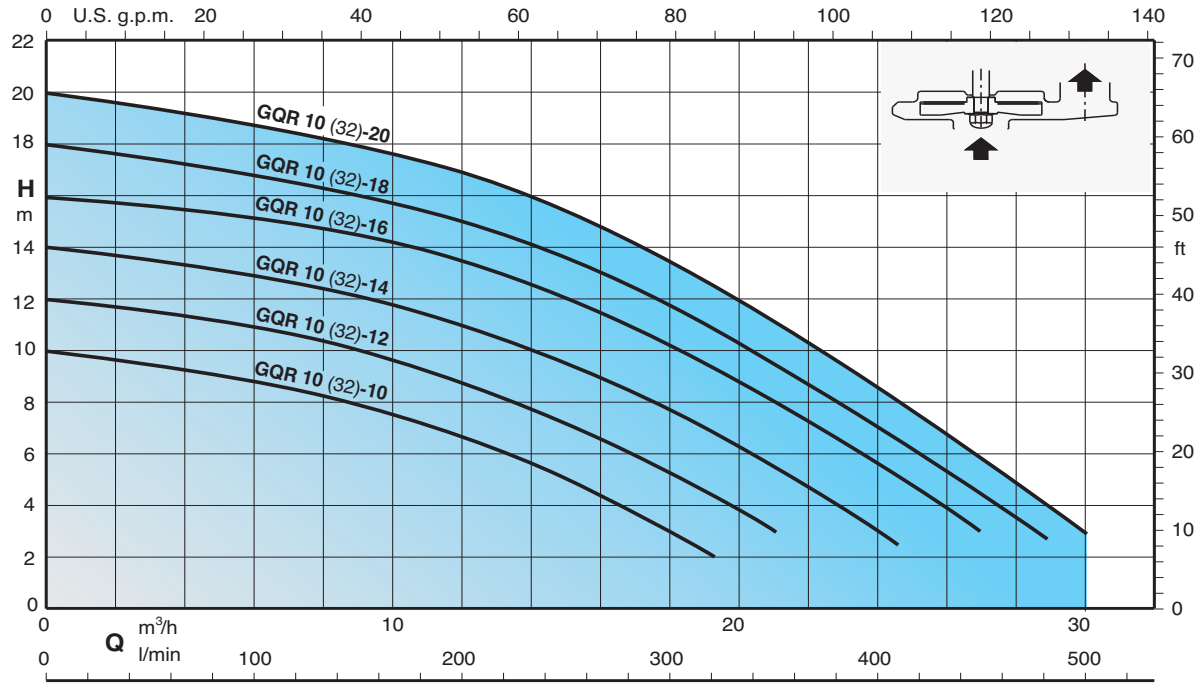

CALPEDA ROMANIA - INFINITY PUMPS SRL
Tel: 0268.33.47.47 / 0722.244.944
vanzari@calpeda.ro | www.calpeda.ro

GQR Submersible Drainage Pumps

Performance n ≈ 2900 rpm

3~	230V	400V	1~	230V	Capacitor		P1	P2		Q m³/h	0	3	6	9	12	15	18	21	24	27	30
	A	A		A	µf	Vc	kW	kW	HP	l/min	0	50	100	150	200	250	300	350	400	450	500
GQR 10-10 **GQR 10 32-10**	2	1,2	**GQRM 10-10** **GQRM 10 32-10**	3,1	12,5	450	0,7	0,45	0,6	**H** m	10	9,5	8,8	8	6,7	5	3	-	-	-	-
GQR 10-12 **GQR 10 32-12**	2,4	1,4	**GQRM 10-12** **GQRM 10 32-12**	3,6	16	450	1	0,55	0,75		12	11,6	11	10,2	9	7,5	5,5	3,2	-	-	-
GQR 10-14 **GQR 10 32-14**	2,8	1,6	**GQRM 10-14** **GQRM 10 32-14**	4,6	16	450	1	0,75	1		14	13,5	12,8	12	10,8	9,3	7,5	5,5	3	-	-
GQR 10-16 **GQR 10 32-16**	4	2,3	**GQRM 10-16** **GQRM 10 32-16**	6	25	450	1,3	0,9	1,2		16	15,5	15	14,2	13,2	11,8	10,2	8	5,5	2,3	-
GQR 10-18 **GQR 10 32-18**	4,8	2,8	**GQRM 10-18** **GQRM 10 32-18**	8	30	450	1,7	1,1	1,5		18	17,5	17	16,2	15	13,7	11,8	9	7	4,3	-
GQR 10-20 **GQR 10 32-20**	6,6	3,8	**GQRM 10-20** **GQRM 10 32-20**	13	35	450	2,2	1,5	2		20	19,5	18,8	18	16,8	15,2	13,2	10,8	8,4	5,7	3

P1 Max. power input. P2 Rated motor power output. Density ρ = 1000 kg/m³. Kinematic viscosity ν = max 20 mm²/sec.

Dimensions and weights

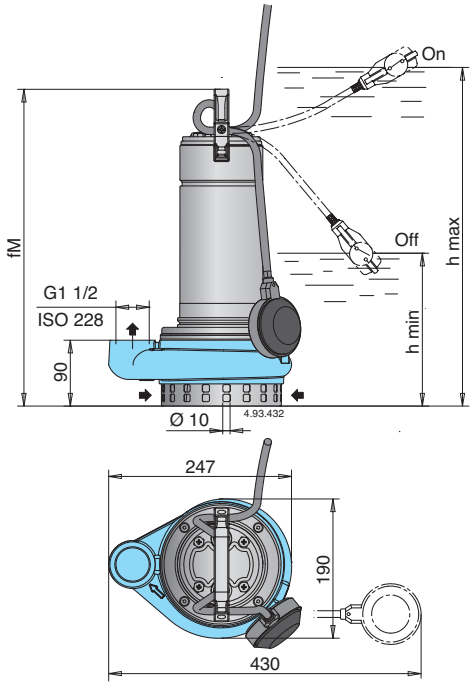

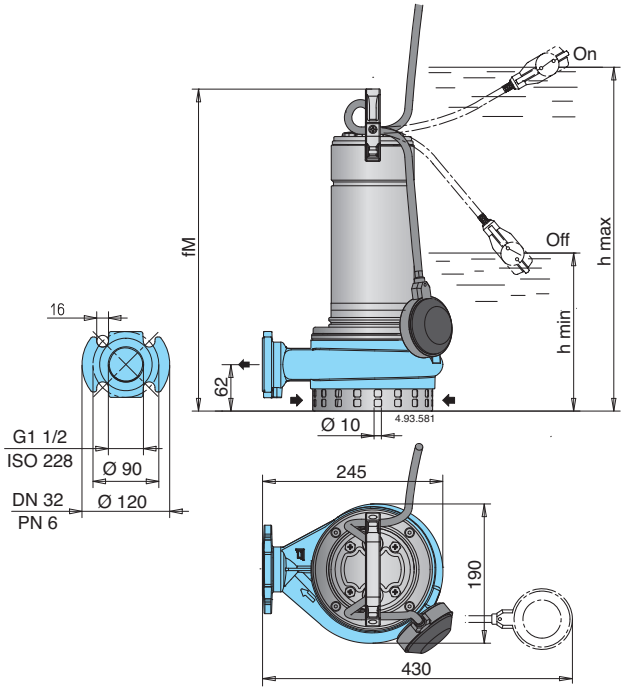

TYPE	mm			kg (1)	
	fM	h max	h min	GQR	GQRM
GQR(M) **10-10**	390	410	205	14	15
GQR(M) **10-12**	405	425	220	14,5	15,5
GQR(M) **10-14**	405	425	220	14,5	15,5
GQR(M) **10-16**	430	450	245	16	18
GQR(M) **10-18**	450	470	265	17,5	19
GQR 10-20	450	470	265	19	-
GQRM 10-20	480	500	295	-	20,5

1) With cable length: 10 m

TYPE	mm			kg (1)	
	fM	h max	h min	GQR	GQRM
GQR(M) **10 32-10**	395	415	210	14,7	15,7
GQR(M) **10 32-12**	410	430	225	15,2	16,2
GQR(M) **10 32-14**	410	430	225	15,2	16,2
GQR(M) **10 32-16**	435	455	250	16,7	18,7
GQR(M) **10 32-18**	455	475	270	18,2	19,7
GQR 10 32-20	455	475	270	19,7	-
GQRM 10 32-20	485	505	300	-	21,2

1) With cable length: 10 m

CALPEDA ROMANIA - INFINITY PUMPS SRL
Tel: 0268.33.47.47 / 0722.244.944
vanzari@calpeda.ro | www.calpeda.ro

GQR Submersible Drainage Pumps

Installation examples

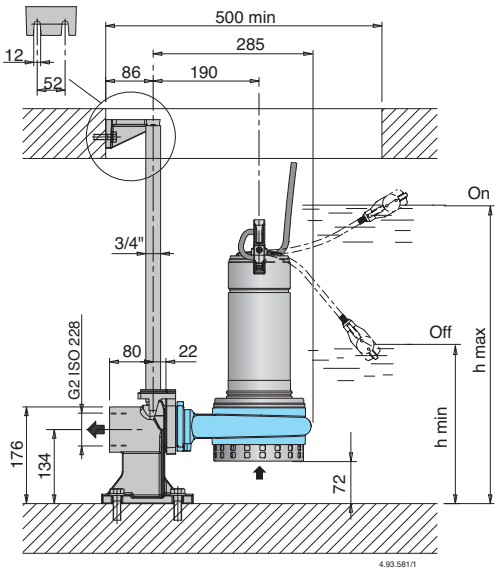

TYPE	mm	
	h max	h min
GQR(M) **10 32-10**	487	282
GQR(M) **10 32-12**	502	297
GQR(M) **10 32-14**	502	297
GQR(M) **10 32-16**	527	322
GQR(M) **10 32-18**	547	342
GQR 10 32-20	547	342
GQRM 10 32-20	577	372

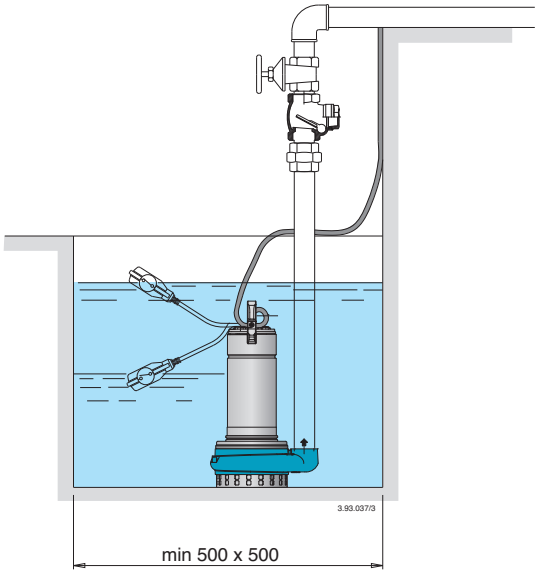

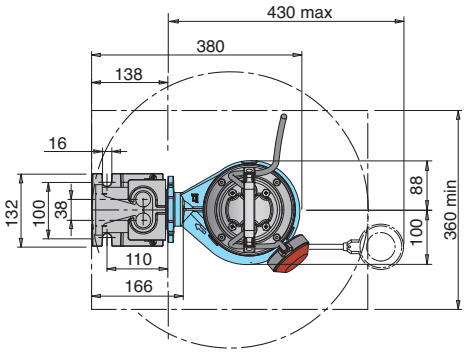

Installation examples with vertical magnetic float switch

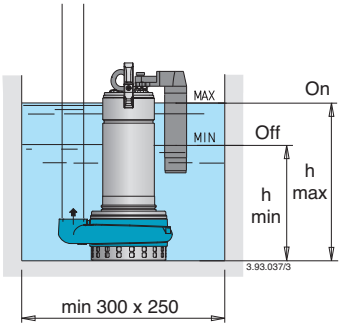

TYPE	mm	
	h min	h max
GQRM 10-10 GF	225	315
GQRM 10-12 GF	240	330
GQRM 10-14 GF	240	330
GQRM 10-16 GF	265	355
GQRM 10-18 GF	285	375

Installation examples

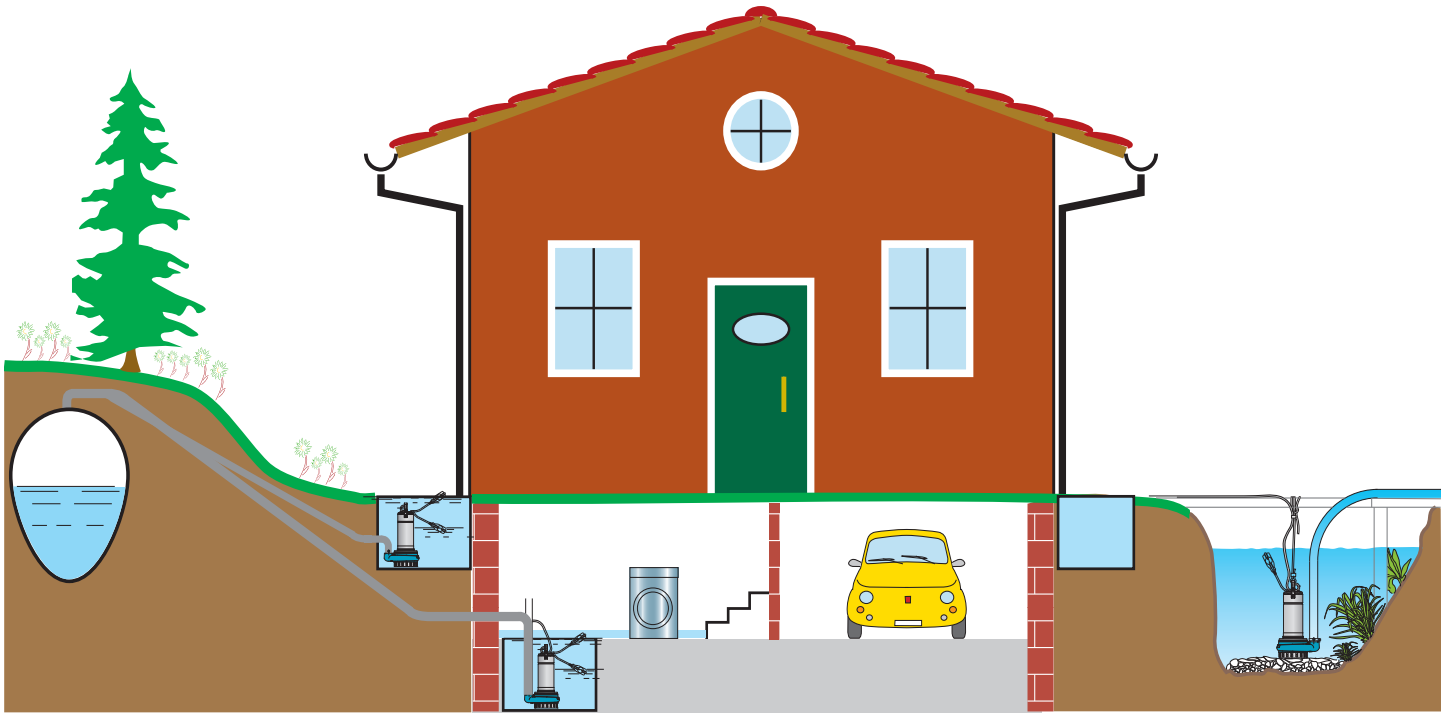

CALPEDA ROMANIA - INFINITY PUMPS SRL
Tel: 0268.33.47.47 / 0722.244.944
vanzari@calpeda.ro | www.calpeda.ro

GQR Submersible Drainage Pumps

Features

PATENTED

Cable length 10 m, pump single-phase with plug

Handle in polypropylene, with frame in stainless steel.

Easy adjustment of the float switch: to allow the adjustement of start/stop pump levels.

Easy inspection of the capacitor area.

Ring against accidental extraction of the cable.

The double shaft seal with oil chamber separates the motor from the water and provides further protection against accidental operation when dry.

Relief valve: the pump is fitted to a relief valve for air release around the impeller granting a proper pump priming also after long standstill periods.

G 1 1/2 vertical, upward delivery port for installation in small pits, without the need for an elbow on the pump.

Chamber with food/pharmaceutical machinery oil

Shaft in chrome-nickel stainless steel.

Suction strainer with a double row of holes, for extra safety against clogging: it allows the passage of solids up to 10 mm.

Pump casing with epoxy cataphoresis treatment joined to the external paint for a greater protection against the rust.

Impeller with epoxy cataphoresis treatment for a greater protection against the rust.

Maximum flexibility of connection:
- Flange DN 32 PN 6 EN 1092-2 for duck foot coupling SA-G2”
- G1 1/2 ISO 228

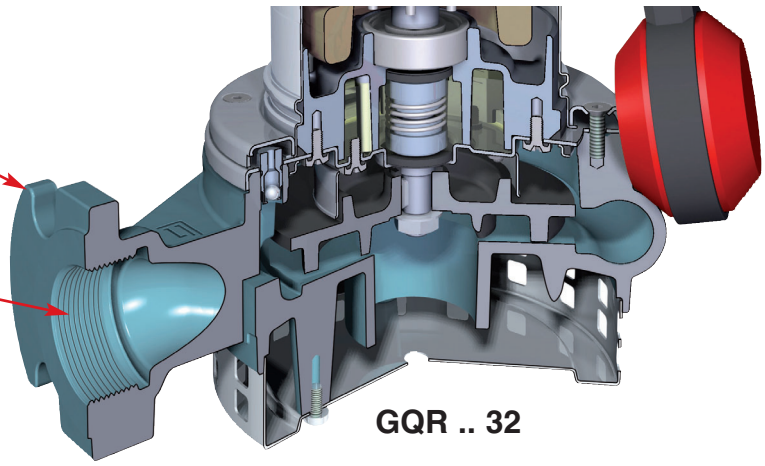

GQR .. 32

CALPEDA ROMANIA - INFINITY PUMPS SRL
Tel: 0268.33.47.47 / 0722.244.944
vanzari@calpeda.ro | www.calpeda.ro

GXC, GXV

Submersible Sewage and Drainage Pumps

PATENTED

Construction

Single-impeller submersible pumps in chrome-nickel stainless steel, with vertical delivery port.
GXC: with two-passage impeller.
GXV: with free-flow (vortex) impeller.
Double shaft seal with interposed oil chamber.

Applications

For clean and dirty water, also containing solids up to 35 mm grain size.
The GXV free-flow impeller construction is particularly suitable for liquids with a high solid content or with filamentous particles. This construction (with smooth surfaces in rolled-stainless steel and easy access for cleaning) is also suitable for certain uses in the food industry.

Operating conditions

Liquid temperature up to 35 °C.
Minimum immersion depth: 250 mm.
Maximum immersion depth: 5 m.
Continuous duty (with submerged motor).

Motor

2-pole induction motor, 50 Hz (n ≈ 2900 rpm).
GXC, GXV: three-phase 230 V ± 10%;
three-phase 400 V ± 10%;.
Cable: H07RN-F, 4G1 mm^2, length 10 m, without plug.
GXCM, GXVM: single-phase 230 V ± 10%,
with float switch and thermal protector.
Incorporated capacitor.
Cable: H07RN-F, 3G1 mm^2, length 10 m, with plug CEI-UNEL 47166.
Insulation class F.
Protection IP X8 (for continuous immersion)
Triple impregnation humidity-proof dry winding.
Constructed in accordance with: EN 60034-1;
EN 60335-1, EN 60335-2-41.

Materials

Component	Material
Pump casing Casing cover Impeller Motor jacket Jacket cover	Chrome-nickel steel 1.4301 EN 10088 (AISI 304)
Handle	Polypropylene (with frame in AISI 304)
Shaft	Chrome-nickel steel 1.4301 EN 10088 (AISI 304)
Mechanical seal: upper lower	Ceramic alumina/Carbon/NBR
Seal lubrication oil	Oil for food/pharmaceutical machinery

Other features on request

- Other voltages. - Frequency 60 Hz (as per 60 Hz data sheet).
- Other mechanical seal. - Cable length 20 m.
- Motor suitable for operation with frequency converter.
- Three-phase pumps with incorporated float switch.

Characteristic curves n ≈ 2900 rpm

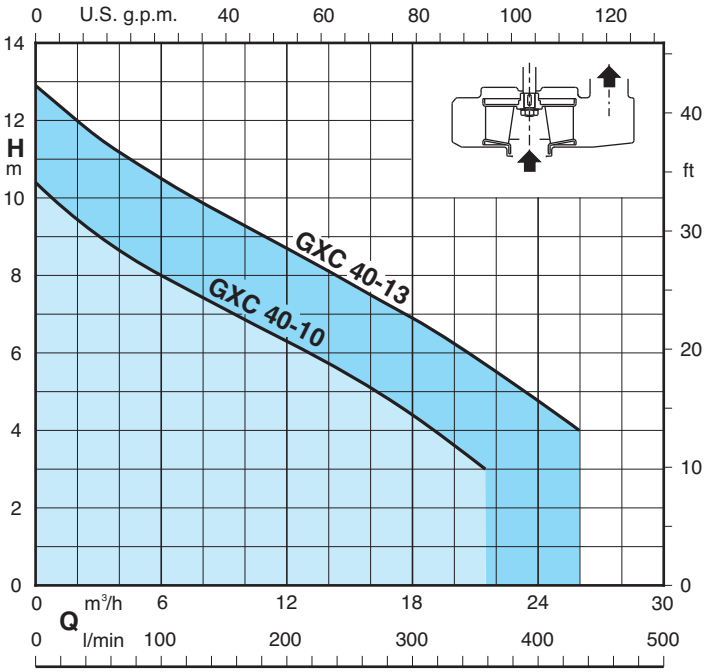

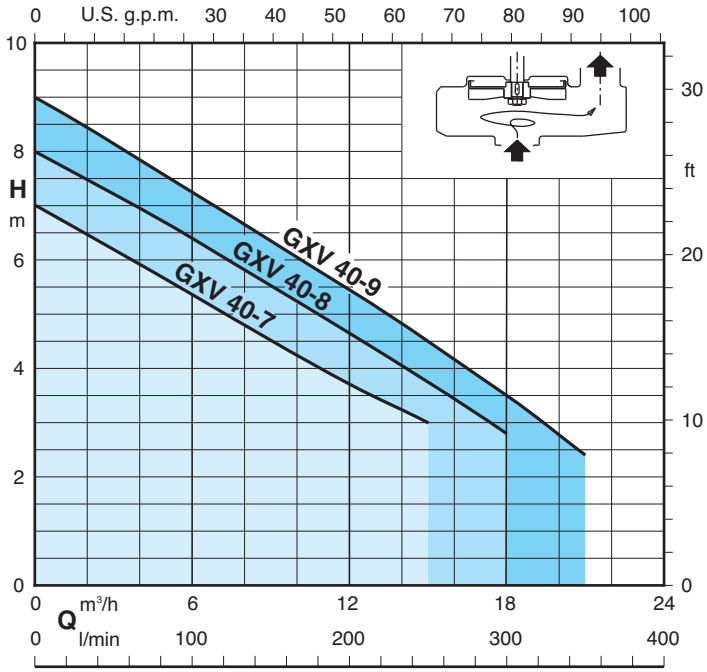

CALPEDA ROMANIA - INFINITY PUMPS SRL
Tel: 0268.33.47.47 / 0722.244.944
vanzari@calpeda.ro | www.calpeda.ro

GXC, GXV

Submersible Sewage and Drainage Pumps

Performance n ≈ 2900 rpm

3~	230V	400V	1~	230V	Capacitor		P1	P2		Q m³/h	0	3	6	9	12	15	18	21	24	26
	A	A		A	µf	Vc	kW	kW	HP	l/min	0	50	100	150	200	250	300	350	400	433
GXC 40-10	2,8	1,6	**GXCM 40-10**	4,6	16	450	1	0,55	0,75	H m	10,4	9	8	7,1	6,3	5,4	4,4	3,2	-	-
GXC 40-13	4	2,3	**GXCM 40-13**	6,6	25	450	1,45	0,9	1,2		12,9	11,6	10,5	9,5	8,7	7,8	6,9	5,9	4,7	4

3~	230V	400V	1~	230V	Capacitor		P1	P2		Q m³/h	0	3	6	9	12	15	18	21	24	26
	A	A		A	µf	Vc	kW	kW	HP	l/min	0	50	100	150	200	250	300	350	400	433
GXV 40-7	2,8	1,6	**GXVM 40-7**	4,6	16	450	1	0,55	0,75		7	6,2	5,4	4,6	3,7	3	-	-	-	-
GXV 40-8	3,8	2,2	**GXVM 40-8**	5,4	25	450	1,1	0,75	1	H m	8	7,2	6,4	5,5	4,6	3,7	2,8	-	-	-
GXV 40-9	4	2,3	**GXVM 40-9**	6	25	450	1,3	0,9	1,2		9	8,1	7,2	6,3	5,4	4,5	3,5	2,4	-	-

P1 Max. power input. P2 Rated motor power output. Density ρ = 1000 kg/m³. Kinematic viscosity ν = max 20 mm²/sec.

Dimensions and weights

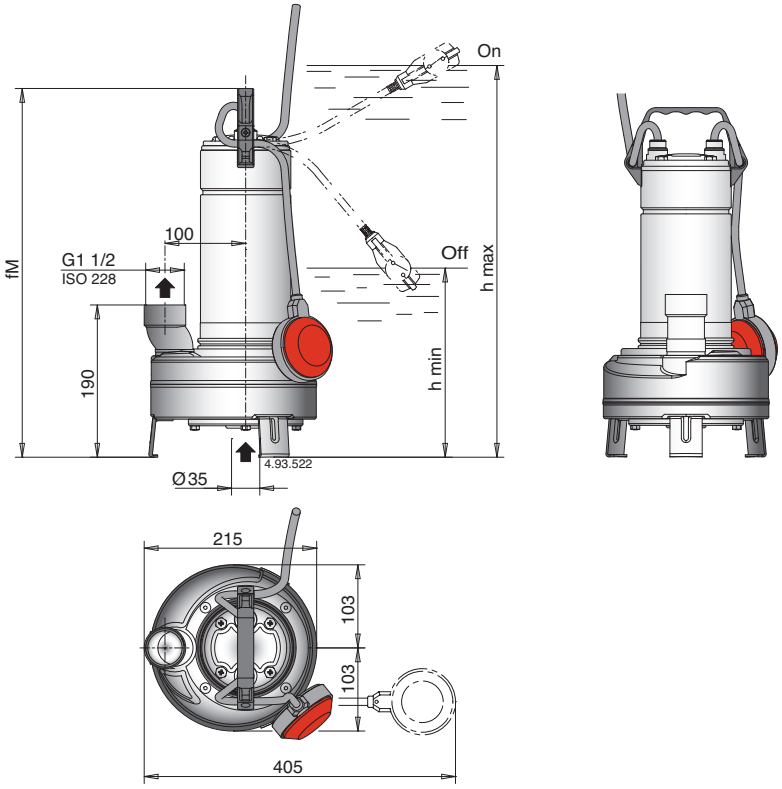

TYPE	mm			kg(1)	
	fM	h max	h min	GXV	GXVM
GXV(M) **40-7**	433	508	248	10,1	11,7
GXV(M) **40-8**	458	533	273	11,7	13,2
GXV(M) **40-9**	458	533	273	11,7	13,2

TYPE	mm			kg(1)	
	fM	h max	h min	GXC	GXCM
GXC(M) **40-10**	433	508	248	10,1	11,7
GXC(M) **40-13**	458	533	273	11,7	13,2

1) With cable length: 10 m

CALPEDA ROMANIA - INFINITY PUMPS SRL
Tel: 0268.33.47.47 / 0722.244.944
vanzari@calpeda.ro | www.calpeda.ro

Installation examples

Stationary installation

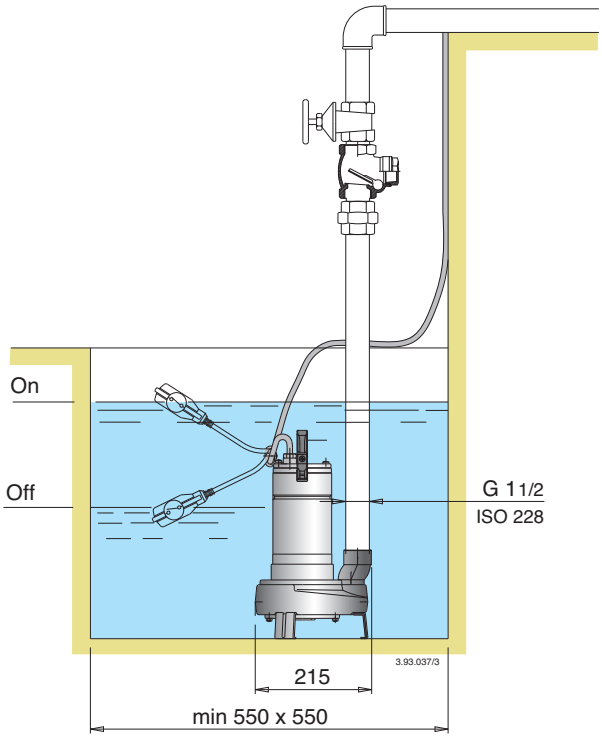

Transportable installation

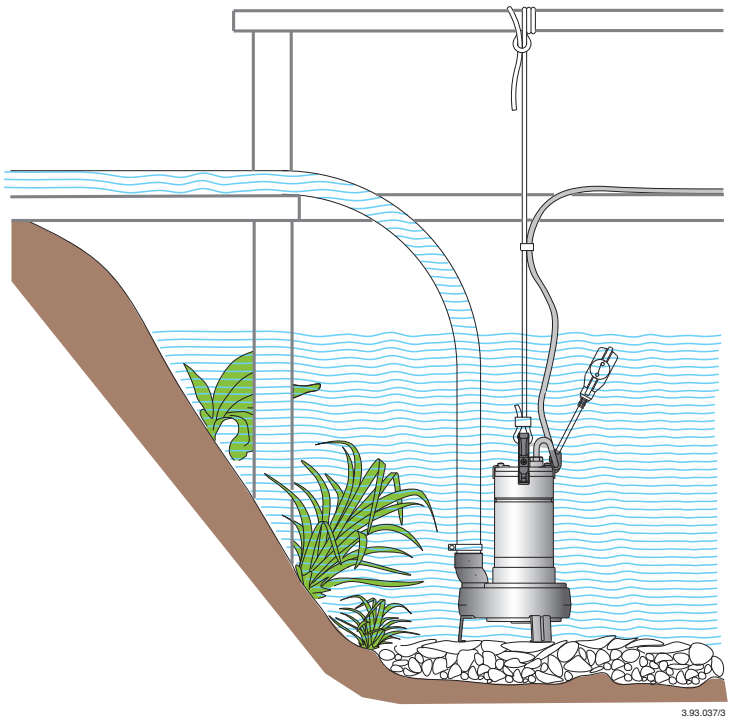

Connection examples

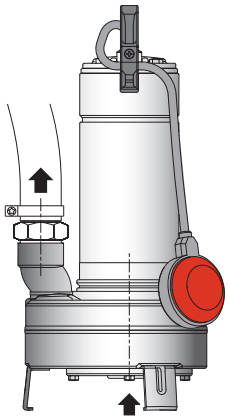

Pump with hosetail seat and clamp
(locally available)

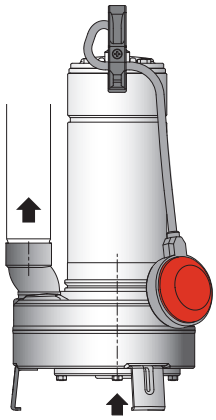

Pump with pipe screwed into the delivery port

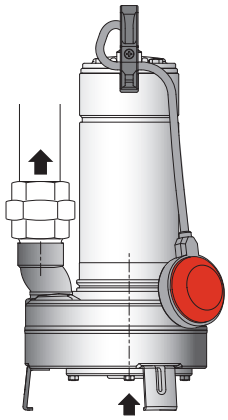

Pump with pipe and union
(locally available)

CALPEDA ROMANIA - INFINITY PUMPS SRL
Tel: 0268.33.47.47 / 0722.244.944
vanzari@calpeda.ro | www.calpeda.ro

GXC, GXV Submersible Sewage and Drainage Pumps

Features

PATENTED

Cable length 10 m, pump single-phase with plug

Handle in polypropylene, with frame in stainless steel.

Easy inspection of the capacitor area.

Easy adjustment of the float switch: to allow the adjustement of start/stop pump levels.

Ring against accidental extraction of the cable.

The double shaft seal with oil chamber separates the motor from the water and provides further protection against accidental operation when dry.

G 1 1/2 vertical, upward delivery port for installation in small pits, without the need for an elbow on the pump.

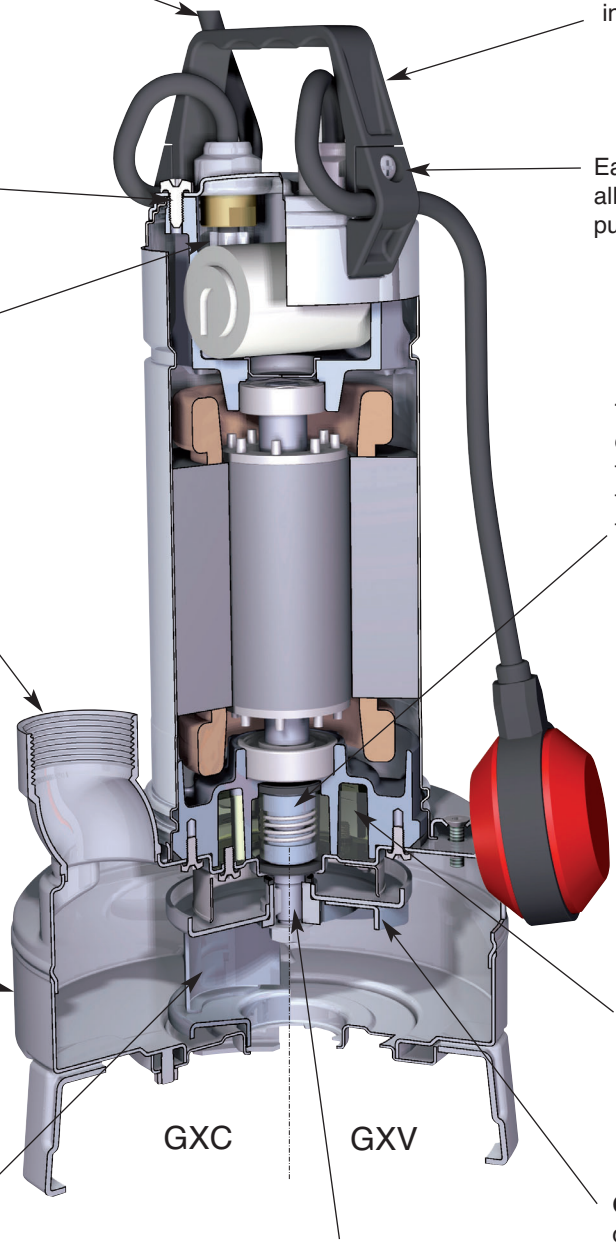

Totally in stainless steel
All parts in contact with the pumped liquid both internal and external are in stainless steel AISI 304

Chamber with food/pharmaceutical machinery oil.

GXC The two-passage impeller costruction is particulary suitable for liquids containing solids up to 35 mm grain size.

Shaft in chrome-nickel stainless steel.

GXV The free-fow impeller (vortex) construction is particularly suitable for liquids with a high solid content up to 35 mm grain size or with filamentous particles.

CALPEDA ROMANIA - INFINITY PUMPS SRL
Tel: 0268.33.47.47 / 0722.244.944
vanzari@calpeda.ro | www.calpeda.ro

GQS, GQV Submersible Sewage and Drainage Pumps

PATENTED

Construction

Single-impeller submersible pumps, with free-flow (vortex) impeller.
GQS: with vertical threaded delivery port (G 2").
GQV: with horizontal flanged and threaded delivery port (DN 50 - G 2").
Double mechanical shaft seal with interposed oil chamber, to protect against dry-running.

Applications

For domestic or industrial waste water, dirty water with solids up to 50 mm grain size, for liquids which are compatible with the pump materials.
For draining rooms or or emptying tanks.
Extraction of water from ponds, streams or pits and for rainwater collection.

Operating conditions

Liquid temperature up to 35° C.
pH value: 6-11.
Maximum immersion depth: 5 m.
Minimum immersion depth: 275 mm.
Continuous duty (with submerged motor).

Motor

2-pole induction motor, 50 Hz (n ≈ 2900 rpm).
GQV, GQS: three-phase 230 V ± 10%;
three-phase 400 V ± 10%;.
Cable: H07RN-F, 4G1 mm^2, length 10 m, without plug.
GQVM, GQSM: single-phase 230 V ± 10%,
with float switch and thermal protector.
Incorporated capacitor.
Cable: H07RN-F, 3G1 mm^2, length 10 m, with plug CEI-UNEL 47166.
Insulation class F.
Protection IP X8 (for continuous immersion)
Triple impregnation humidity-proof dry winding.
Constructed in accordance with: EN 60034-1;
EN 60335-1, EN 60335-2-41.

Materials

Component	Material
Pump casing Impeller	Cast iron GJL 200 EN 1561
Motor jacket Jacket cover Casing cover	Chrome-nickel steel 1.4301 EN 10088 (AISI 304)
Handle	Polypropylene (with frame in AISI 304)
Shaft	Chrome-nickel steel 1.4301 EN 10088 (AISI 304)
Mechanical seal: upper lower	Ceramic alumina/Carbon/NBR
Seal lubrication oil	Oil for food/pharmaceutical machinery

Other features on request

- Other voltages. - Frequency 60 Hz (as per 60 Hz data sheet).
- Other mechanical seal. - Cable length 20 m.
- Motor suitable for operation with frequency converter.
- Three-phase pumps with incorporated float switch.

Characteristic curves n ≈ 2900 rpm

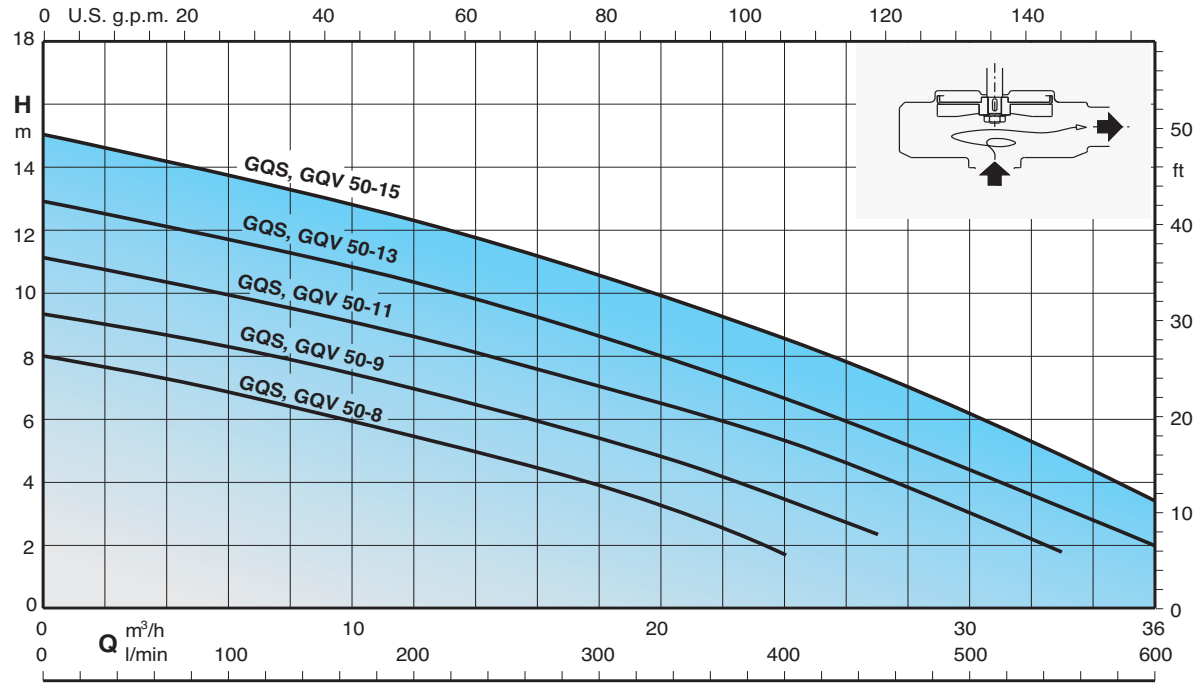

CALPEDA ROMANIA - INFINITY PUMPS SRL
Tel: 0268.33.47.47 / 0722.244.944
vanzari@calpeda.ro | www.calpeda.ro

GQS, GQV Submersible Sewage and Drainage Pumps

Performance n ≈ 2900 rpm

3~	230V 400V		1~	230V	Capacitor		P1	P2		Q m³/h	0	3	6	9	12	15	18	21	24	27	30	33	36
	A	A		A	µf	Vc	kW	kW	HP	l/min	0	50	100	150	200	250	300	350	400	450	500	550	600
GQS 50-8 **GQV 50-8**	2,6	1,5	**GQSM 50-8** **GQVM 50-8**	4,3	16	450	0,95	0,55	0,75		8	7,4	6,9	6,3	5,6	4,8	4	3	1,8	-	-	-	-
GQS 50-9 **GQV 50-9**	3,1	1,8	**GQSM 50-9** **GQVM 50-9**	4,8	16	450	1,1	0,75	1	**H** m	9,3	8,8	8,3	7,7	7	6,2	5,3	4,3	3,2	2,2	-	-	-
GQS 50-11 **GQV 50-11**	4	2,3	**GQSM 50-11** **GQVM 50-11**	6,6	25	450	1,45	0,9	1,2		11	10,5	10	9,3	8,6	7,8	7	6,2	5,2	4,2	3	1,8	-
GQS 50-13 **GQV 50-13**	5,2	3	**GQSM 50-13** **GQVM 50-13**	8,4	30	450	1,8	1,1	1,5		12,8	12,2	11,6	11	10,3	9,5	8,6	7,7	6,7	5,7	4,5	3,3	2
GQS 50-15 **GQV 50-15**	6,9	4	**GQSM 50-15** **GQVM 50-15**	13	35	450	2,2	1,5	2		15	14,4	13,7	13	12,2	11,3	10,4	9,5	8,5	7,4	6,2	4,8	3,5

P1 Max. power input. P2 Rated motor power output. Density ρ = 1000 kg/m³. Kinematic viscosity ν = max 20 mm²/sec.

Dimensions and weights

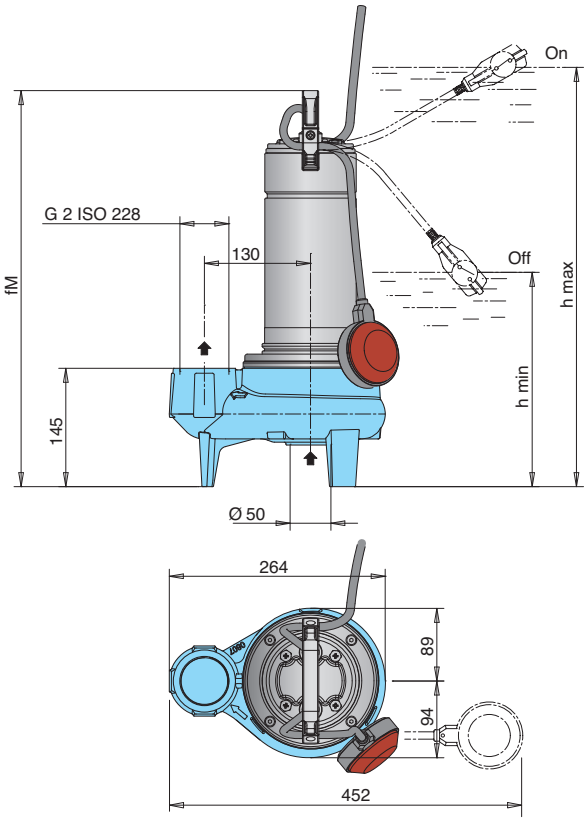

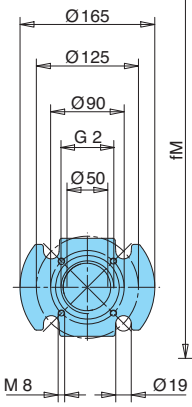

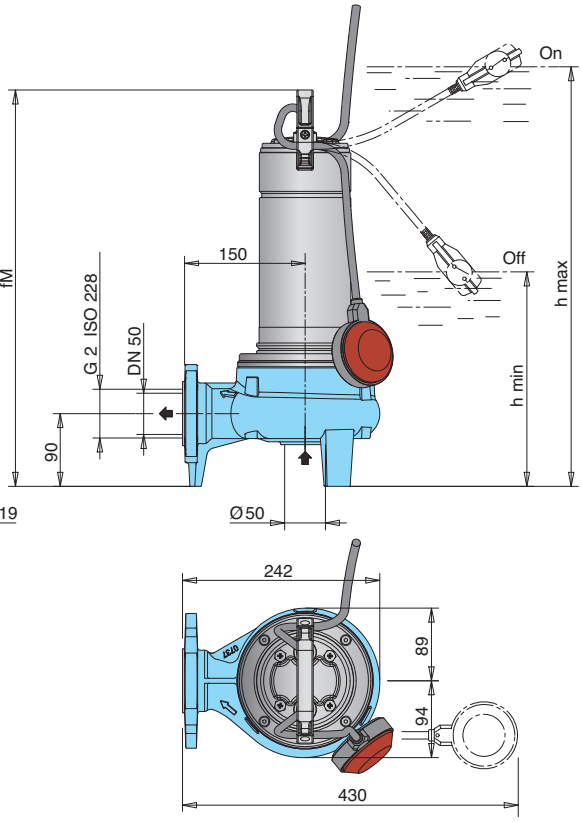

TYPE	mm			kg (1)	
	fM	h max	h min	GQS	GQSM
GQS(M) **50-8**	460	535	275	14,8	15,8
GQS(M) **50-9**	460	535	275	15	16
GQS(M) **50-11**	485	560	300	15,8	17,8
GQS(M) **50-13**	505	580	320	18,8	20,3
GQS 50-15	505	580	320	20,3	-
GQSM 50-15	535	610	350	-	21,8

1) With cable length: 10 m

TYPE	mm			kg (1)	
	fM	h max	h min	GQV	GQVM
GQV(M) **50-8**	460	535	275	15	16
GQV(M) **50-9**	460	535	275	15,2	16,2
GQV(M) **50-11**	485	560	300	16	18
GQV(M) **50-13**	505	580	320	19	20,5
GQV 50-15	505	580	320	20,5	-
GQVM 50-15	535	610	350	-	22

1) With cable length: 10 m

CALPEDA ROMANIA - INFINITY PUMPS SRL
Tel: 0268.33.47.47 / 0722.244.944
vanzari@calpeda.ro | www.calpeda.ro

GQS, GQV Submersible Sewage and Drainage Pumps

Installation examples

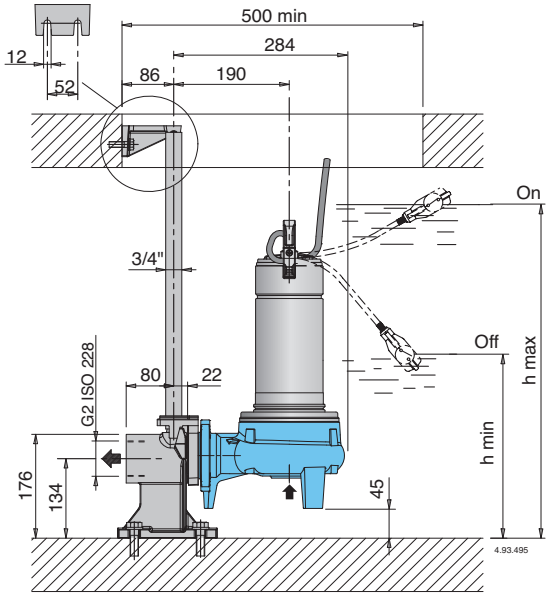

TYPE	mm h max	mm h min
GQV(M) **50-8**	580	320
GQV(M) **50-9**	580	320
GQV(M) **50-11**	605	345
GQV(M) **50-13**	625	365
GQV 50-15	625	365
GQVM 50-15	655	395

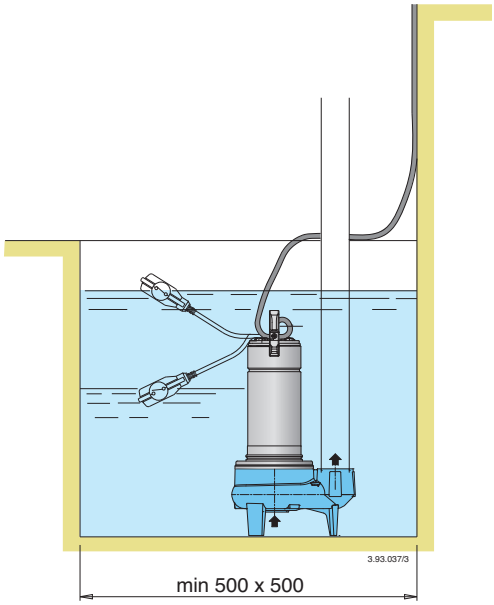

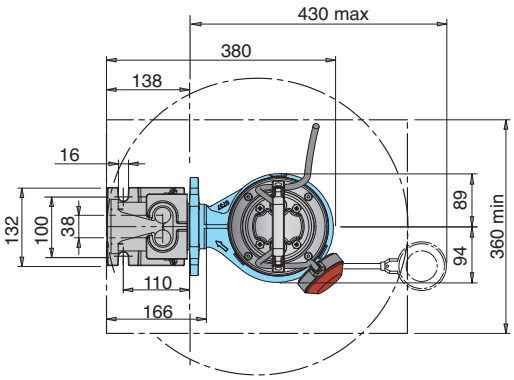

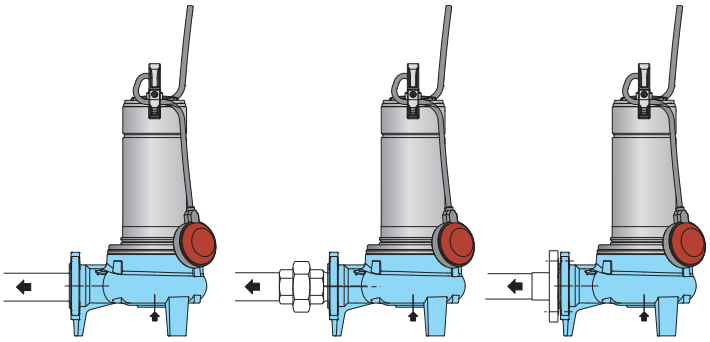

Pump with threaded ports: pipes screwed into the ports

Pump with threaded ports: pipes with union couplings (locally available)

Pump with DN 50 flanged ports: pipes with counter-flanges

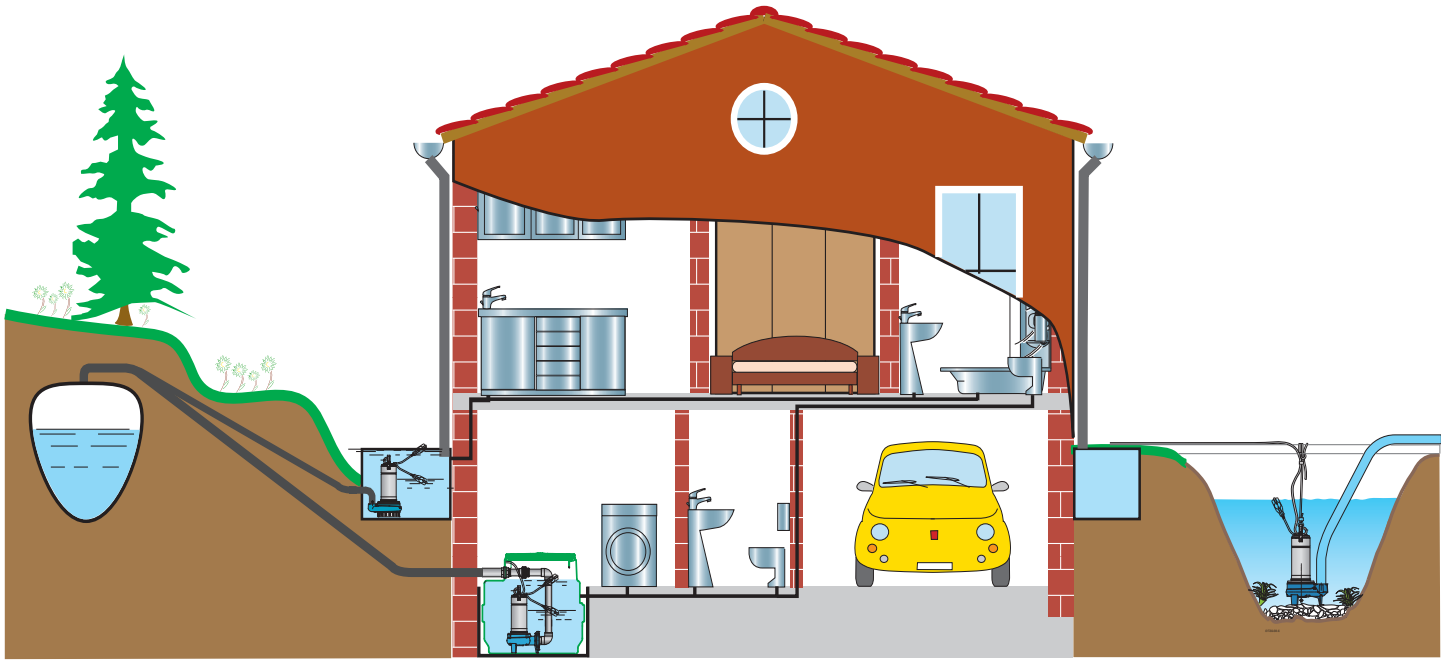

CALPEDA ROMANIA - INFINITY PUMPS SRL
Tel: 0268.33.47.47 / 0722.244.944
vanzari@calpeda.ro | www.calpeda.ro

GQS, GQV Submersible Sewage and Drainage Pumps

Features

Cable length 10 m, pump single-phase with plug

PATENTED

Handle in polypropylene, with frame in stainless steel.

Easy inspection of the capacitor area.

Easy adjustment of the float switch: to allow the adjustement of start/stop pump levels.

Ring against accidental extraction of the cable.

The double shaft seal with oil chamber separates the motor from the water and provides further protection against accidental operation when dry.

Relief valve: the pump is fitted to a relief valve for air release around the impeller granting a proper pump priming also after long standstill periods.

Chamber with food/pharmaceutical machinery oil

Maximum flexibility of connection:
- Flange DN 50 PN 10 EN 1092-2
- N. 4 M8 holes on Ø 90 for duck foot coupling SA-G2”
- G 2 ISO 228

Impeller with epoxy cataphoresis treatment for a greater protection against the rust.

Shaft in chrome-nickel stainless steel.

The free-fow impeller (vortex) costruction is particulary suitable for liquids containing solids up to 50 mm grain size.

Pump casing with epoxy cataphoresis treatment joined to the external paint for a greater protection against the rust.

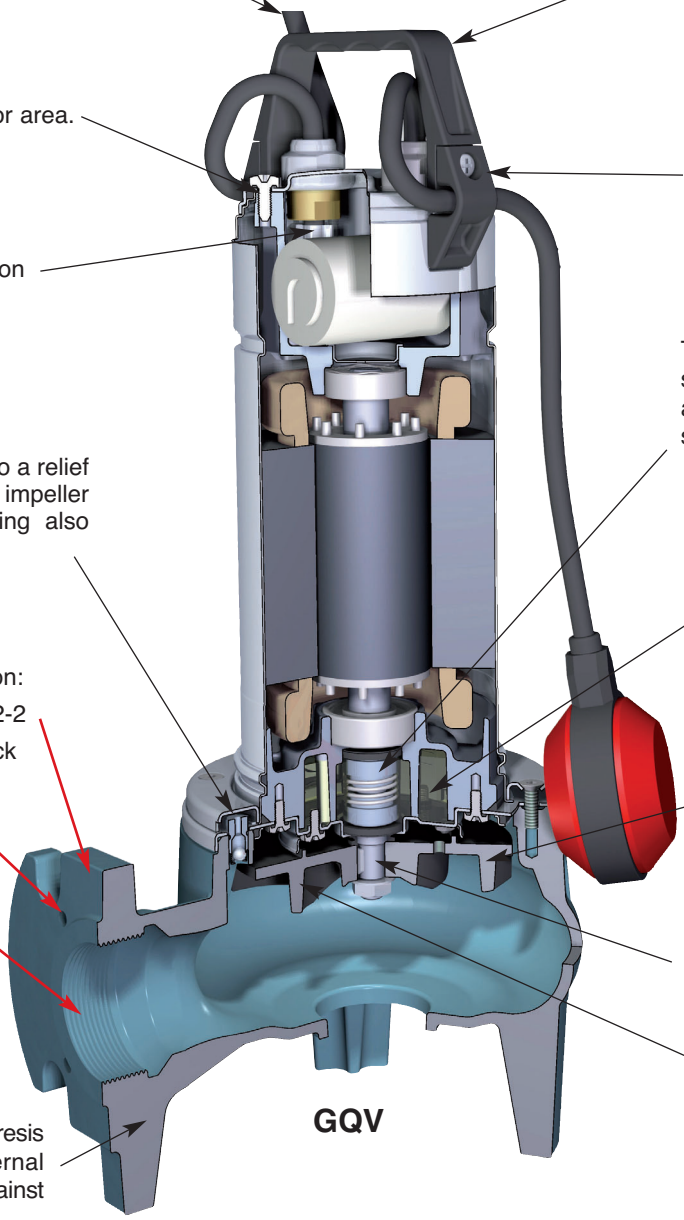

GQV

G 2 vertical, upward delivery port for installation in small pits, without the need for an elbow on the pump.

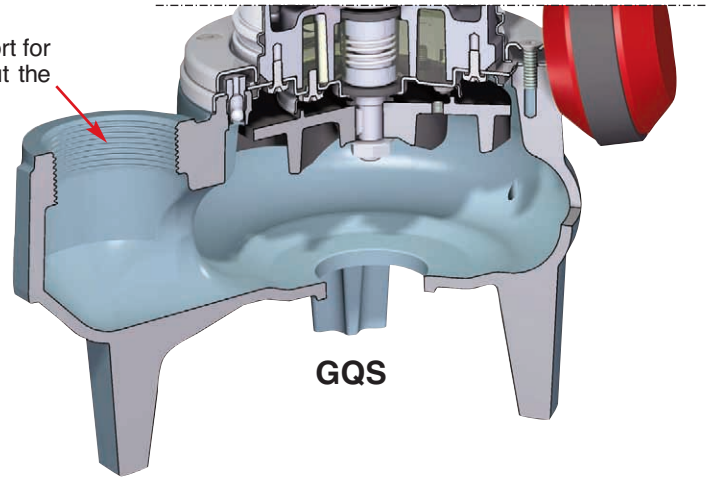

GQS

CALPEDA ROMANIA - INFINITY PUMPS SRL
Tel: 0268.33.47.47 / 0722.244.944
vanzari@calpeda.ro | www.calpeda.ro

GQN

Submersible Sewage and Drainage Pumps

PATENTED

Construction

Single-impeller submersible pumps, (with two-passage) with channels impeller with vertical threaded delivery port (G 2”). Double mechanical shaft seal with interposed oil chamber, to protect against dry-running.

Applications

For domestic or industrial waste water, dirty water with solids up to 50 mm grain size, for liquids which are compatible with the pump materials.
For draining rooms or or emptying tanks.
Extraction of water from ponds, streams or pits and for rainwater collection.

Operating conditions

Liquid temperature up to 35° C.
pH value: 6-11.
Maximum immersion depth: 5 m.
Minimum immersion depth: 275 mm.
Continuous duty (with submerged motor).

Motor

2-pole induction motor, 50 Hz (n ≈ 2900 rpm).
GQN : three-phase 230 V ± 10%;
three-phase 400 V ± 10%;.
Cable: H07RN-F, 4G1 mm^2, length 10 m, without plug.
GQNM: single-phase 230 V ± 10%,
with float switch and thermal protector.
Incorporated capacitor.
Cable: H07RN-F, 3G1 mm^2, length 10 m, with plug CEI-UNEL 47166.
Insulation class F.
Protection IP X8 (for continuous immersion)
Triple impregnation humidity-proof dry winding.
Constructed in accordance with: EN 60034-1;
EN 60335-1, EN 60335-2-41.

Materials

Component	Material
Pump casing Impeller	Cast iron GJL 200 EN 1561
Motor jacket Jacket cover Casing cover	Chrome-nickel steel 1.4301 EN 10088 (AISI 304)
Handle	Polypropylene (with frame in AISI 304)
Shaft	Chrome-nickel steel 1.4301 EN 10088 (AISI 304)
Mechanical seal: upper lower	Ceramic alumina/Carbon/NBR
Seal lubrication oil	Oil for food/pharmaceutical machinery

Other features on request

- Other voltages.
- Frequency 60 Hz (as per 60 Hz data sheet).
- Other mechanical seal.
- Cable length 20 m.
- Motor suitable for operation with frequency converter.
- Three-phase pumps with incorporated float switch.

Characteristic curves n ≈ 2900 rpm

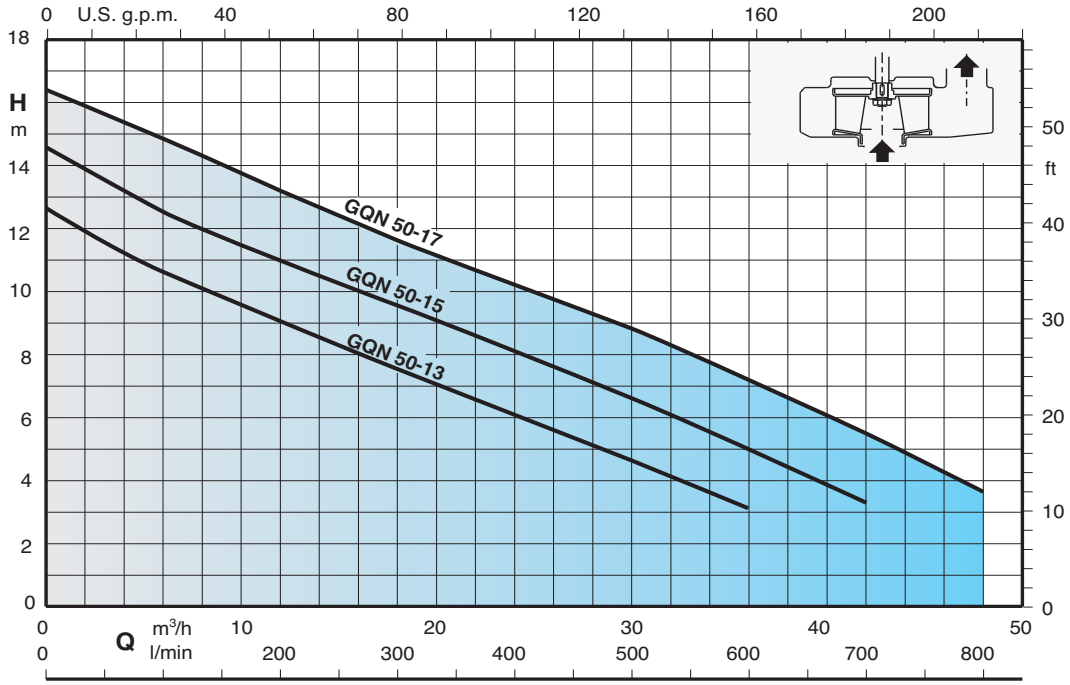

CALPEDA ROMANIA - INFINITY PUMPS SRL
Tel: 0268.33.47.47 / 0722.244.944
vanzari@calpeda.ro | www.calpeda.ro

GQN Submersible Sewage and Drainage Pumps

Performance n ≈ 2900 rpm

3~	230V	400V	1~	230V	Capacitor		P1	P2		Q m³/h	0	3	6	12	18	24	30	36	42	48
	A	A		A	µf	Vc	kW	kW	HP	l/min	0	50	100	200	300	400	500	600	700	800
GQN 50-13	4	2,3	**GQNM 50-13**	6,6	25	450	1,45	0,9	1,2		12,7	11,6	10,6	8,9	7,7	6,3	4,7	3,1	-	-
GQN 50-15	5,8	3,3	**GQNM 50-15**	8,4	30	450	1,8	1,1	1,5	**H** m	14,6	13,5	12,6	10,9	9,6	8,3	6,7	5	3,2	-
GQN 50-17	7,8	4,5	**GQNM 50-17**	12	35	450	2,2	1,5	2		16,4	15,7	14,9	13,2	11,7	10,3	8,9	7,3	5,5	3,6

P1 Max. power input. P2 Rated motor power output. Density ρ = 1000 kg/m³. Kinematic viscosity ν = max 20 mm²/sec.

Dimensions and weights

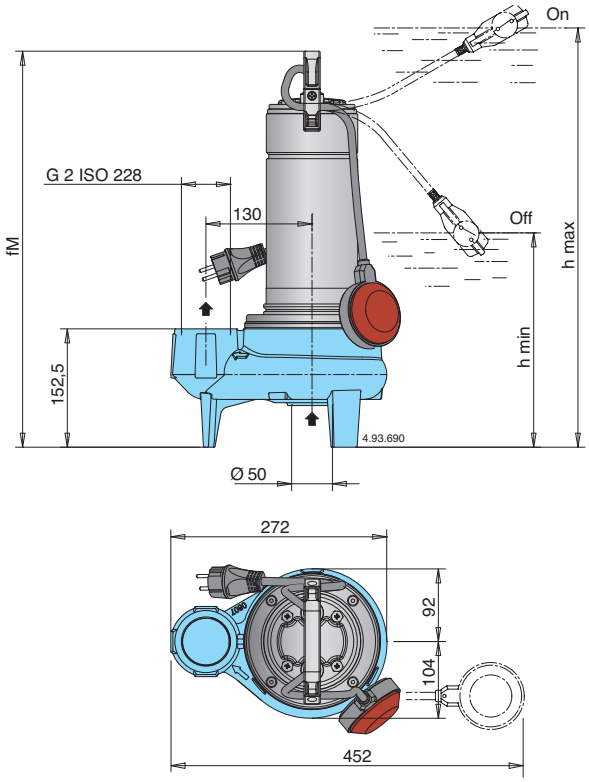

TYPE	mm			kg (1)	
	fM	h max	h min	GQN	GQNM
GQN(M) **50-13**	493	568	308	16	18
GQN(M) **50-15**	513	588	328	19	20,5
GQN 50-17	513	588	328	20,5	-
GQNM 50-17	543	618	358	-	22

1) With cable length: 10 m

CALPEDA ROMANIA - INFINITY PUMPS SRL
Tel: 0268.33.47.47 / 0722.244.944
vanzari@calpeda.ro | www.calpeda.ro

Installation examples

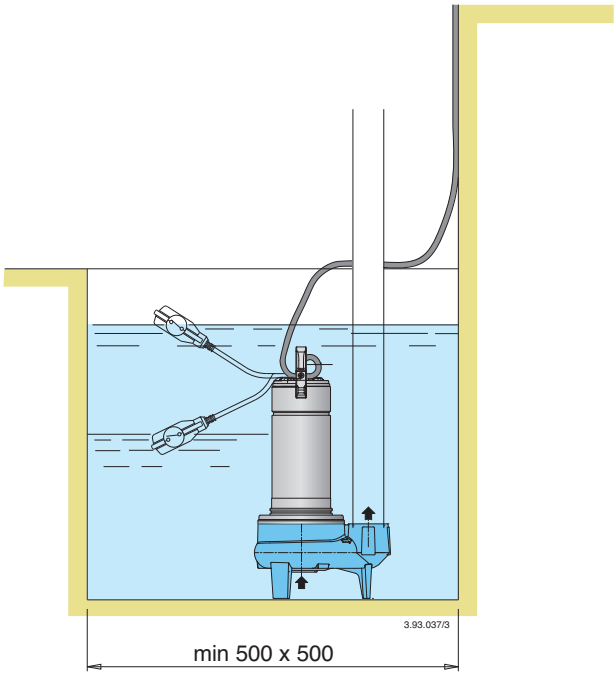

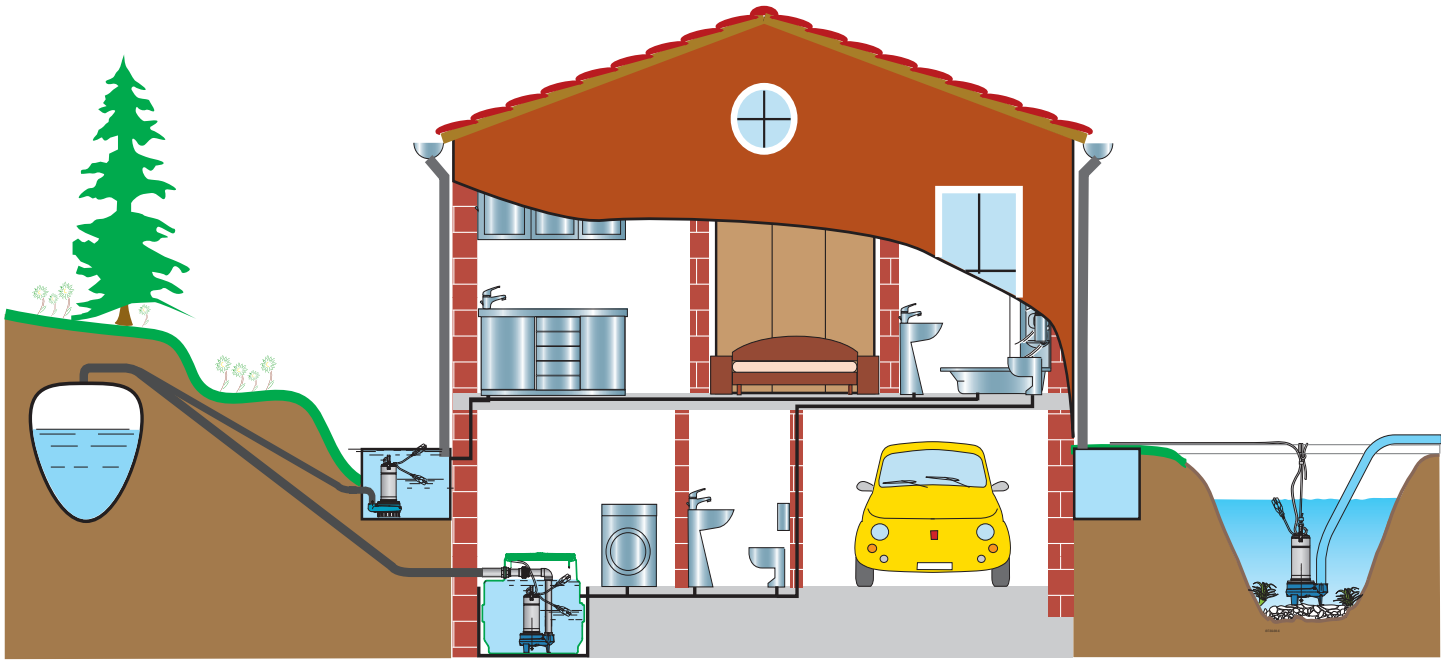

CALPEDA ROMANIA - INFINITY PUMPS SRL
Tel: 0268.33.47.47 / 0722.244.944
vanzari@calpeda.ro | www.calpeda.ro

GQN Submersible Sewage and Drainage Pumps

Features

PATENTED

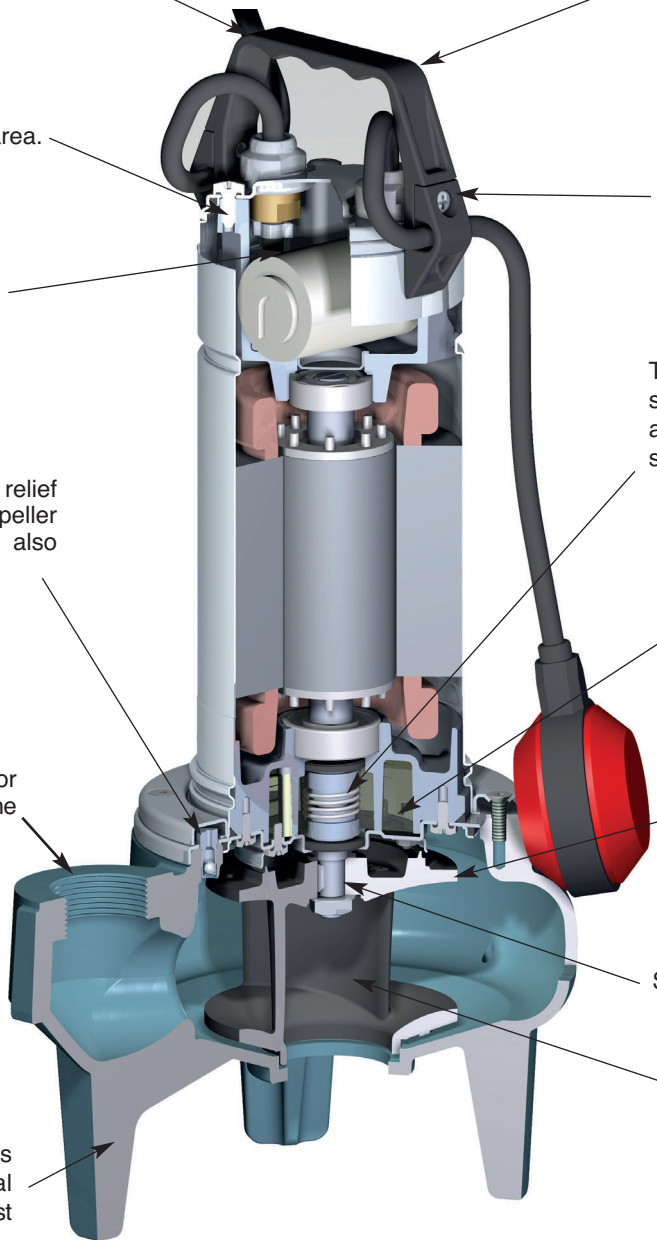

Cable length 10 m, pump single-phase with plug

Handle in polypropylene, with frame in stainless steel.

Easy inspection of the capacitor area.

Easy adjustment of the float switch: to allow the adjustement of start/stop pump levels.

Ring against accidental extraction of the cable.

The double shaft seal with oil chamber separates the motor from the water and provides further protection against accidental operation when dry.

Relief valve: the pump is fitted to a relief valve for air release around the impeller granting a proper pump priming also after long standstill periods.

Chamber with food/pharmaceutical machinery oil

G 2 vertical, upward delivery port for installation in small pits, without the need for an elbow on the pump.

Impeller with epoxy cataphoresis treatment for a greater protection against the rust.

Shaft in chrome-nickel stainless steel.

Channels impeller (two-passage). Costruction is particulary suitable for liquids containing solids up to 50 mm grain size.

Pump casing with epoxy cataphoresis treatment joined to the external paint for a greater protection against the rust.

CALPEDA ROMANIA - INFINITY PUMPS SRL
Tel: 0268.33.47.47 / 0722.244.944
vanzari@calpeda.ro | www.calpeda.ro

GMC, GMV

Submersible Sewage and Drainage Pumps

Construction

Close coupled electric submersible pumps.

GMC: with single-channel impeller.
GMV: with free-flow (vortex) impeller.

Double mechanical shaft seal with interposed oil chamber, to protect against dry-running.

Applications

For domestic or industrial waste water, dirty water with solids up to 45 mm grain size for GMC and 50 mm for GMV, for liquids which are compatible with the pump materials.

Operating conditions

Liquid temperature up to 35 °C.
pH value: 6-11.
Maximum immersion depth: 10 m (with suitable cable length).
Continuous duty (with submerged motor).

Motor

2-pole induction, 50 Hz (n ≈ 2900 rpm).

GMC, GMV: three-phase 230 V ± 10%;
three-phase 400 V ± 10%;
2 built-in thermal protectors to be connected to a control box.
Cable: 4G1,5 mm^2+ 2x0,5 mm^2, length 10 m.

GMCM, GMVM: single-phase 230 V ± 10%.
With float switch, built-in thermal protector and built-in capacitor.
Cable: H07RN8-F, 3G1,5 mm^2, length 10 m, with plug (CEI - UNEL 47166).

Insulation class F.
Protection IP X8.
Triple impregnation, humidity-proof winding.
Constructed in accordance with: EN 60335-2-41.

Materials

Component	Material
Pump casing Casing cover Impeller Motor housing Motor cover	Cast iron GJL 200 EN 1561
Shaft	Chrome steel 1.4016 EN 10088 (AISI 430)
Mechanical seal: Upper Lower	Carbon, ceramic, NBR Silicon carbide, silicon carbide, NBR
Seal lubrication oil	Oil for food machinery and pharmaceutic use

Other features on request

- Other voltages.
- Frequency 60 Hz (as per 60 Hz data sheet).
- Motor suitable for operation with frequency converter.

Characteristic curves n ≈ 2900 rpm

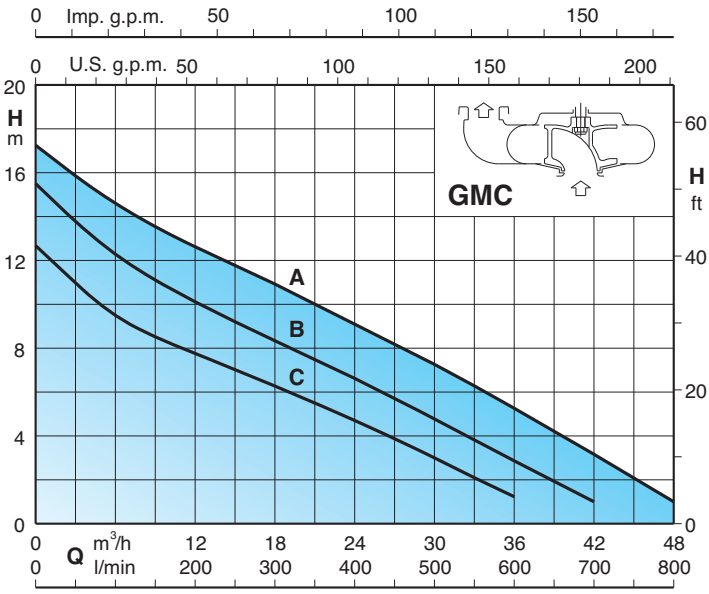

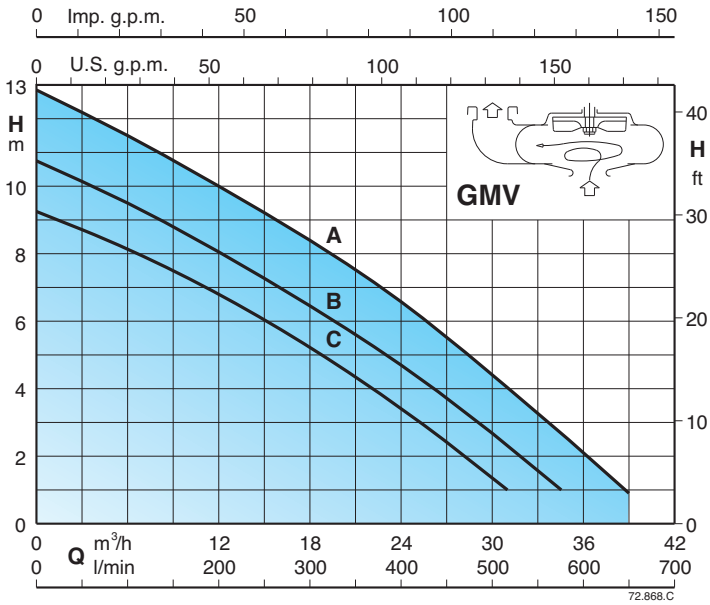

CALPEDA ROMANIA - INFINITY PUMPS SRL
Tel: 0268.33.47.47 / 0722.244.944
vanzari@calpeda.ro | www.calpeda.ro

GMC, GMV

Submersible Sewage and Drainage Pumps

Performance n ≈ 2900 rpm

3~	230 V	400 V	1~	230 V	Capacitor		P1	P2		Q m³/h	0	6	12	18	24	30	36	42	48
	A	A		A	µf	Vc	kW	kW	HP	Q l/min	0	100	200	300	400	500	600	700	800
GMC 50CE **GMC 50-65C**	3,3	1,9	**GMCM 50CE** **GMCM 50-65C**	4,5	16	450	1,1	0,75	1		12,8	9,5	8	6,5	5	3	1		
GMC 50BE **GMC 50-65B**	4,8	2,7	**GMCM 50BE** **GMCM 50-65B**	6,5	12,5x2	450	1,5	1,1	1,5	**H** m	15,5	12,5	10	8,5	6,5	5	3	1	
GMC 50AE **GMC 50-65A**	6,6	3,8						1,5	2		17,3	14,5	12,5	11	9	7,5	5,5	3	1

3~	230 V	400 V	1~	230 V	Capacitor		P1	P2		Q m³/h	0	6	12	18	24	30	31	35	39
	A	A		A	µf	Vc	kW	kW	HP	Q l/min	0	100	200	300	400	500	516	583	650
GMV 50CE **GMV 50-65C**	3,3	1,9	**GMVM 50CE** **GMVM 50-65C**	4,5	16	450	1,1	0,75	1		9,2	8	7	5	3,5	1,5	1		
GMV 50BE **GMV 50-65B**	4,8	2,7	**GMVM 50BE** **GMVM 50-65B**	6,5	12,5x2	450	1,5	1,1	1,5	**H** m	10,7	9,5	8	6,5	4,5	2,5	2,3	1	
GMV 50AE **GMV 50-65A**	6,6	3,8						1,5	2		12,9	11,5	10	8,5	6,5	4,3	4	2,5	1

P1 Max. power input. **H** Total head in m. Density ρ = 1000 kg/m³. Kinematic viscosity ν = max 20 mm²/sec.
P2 Rated motor power output.

Dimensions and weights

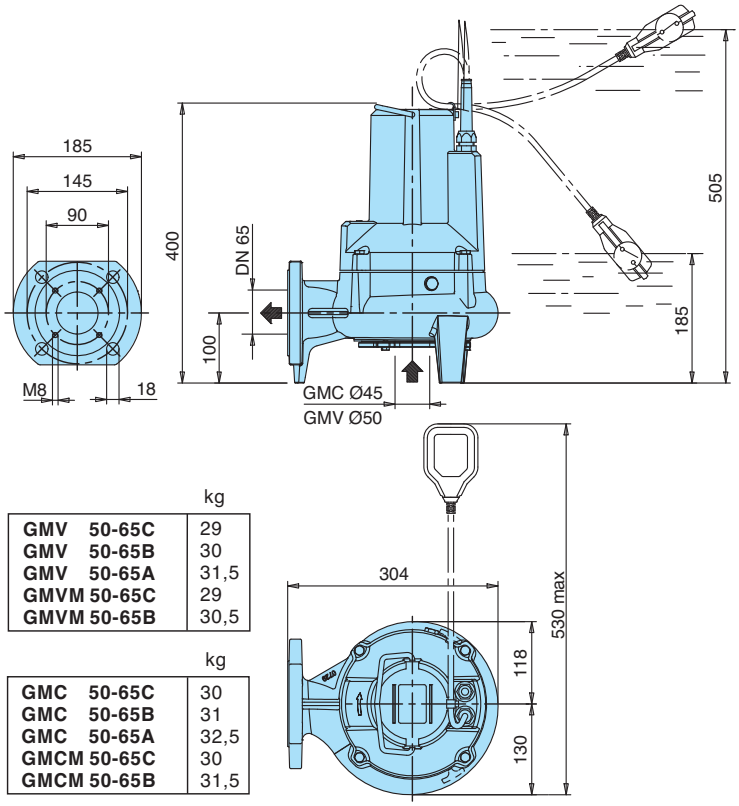

	kg
GMV 50-65C	29
GMV 50-65B	30
GMV 50-65A	31,5
GMVM 50-65C	29
GMVM 50-65B	30,5

	kg
GMC 50-65C	30
GMC 50-65B	31
GMC 50-65A	32,5
GMCM 50-65C	30
GMCM 50-65B	31,5

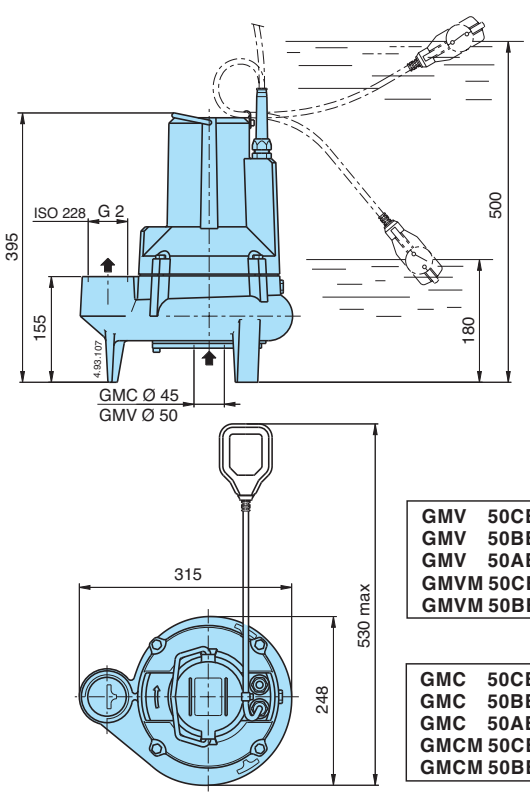

	kg
GMV 50CE	27
GMV 50BE	28
GMV 50AE	29,5
GMVM 50CE	27
GMVM 50BE	28,5

	kg
GMC 50CE	28
GMC 50BE	29
GMC 50AE	30,5
GMCM 50CE	28
GMCM 50BE	29,5

CALPEDA ROMANIA - INFINITY PUMPS SRL
Tel: 0268.33.47.47 / 0722.244.944
vanzari@calpeda.ro | www.calpeda.ro

GMC, GMV

Submersible Sewage and Drainage Pumps

Dimensions with duck foot coupling

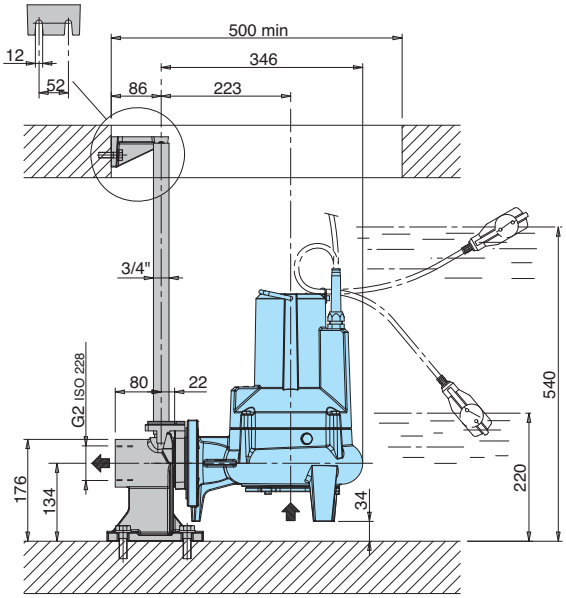

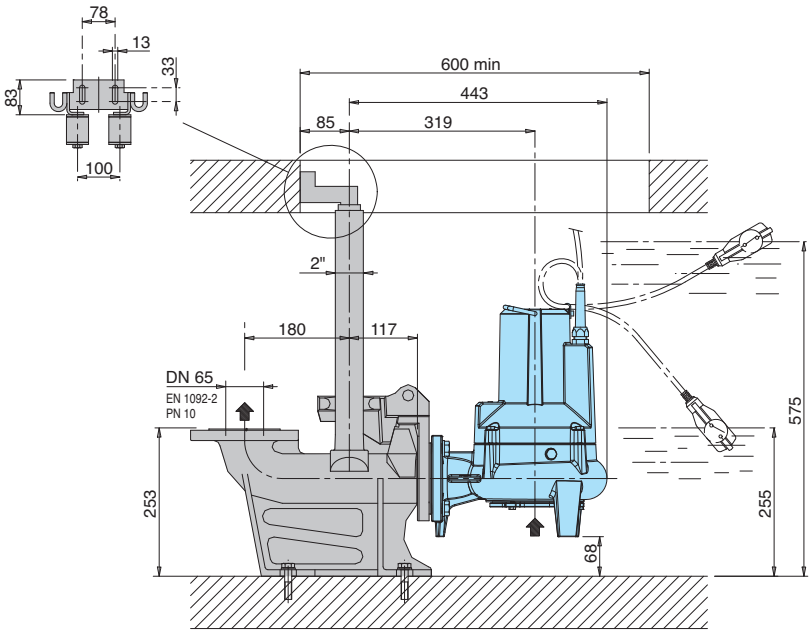

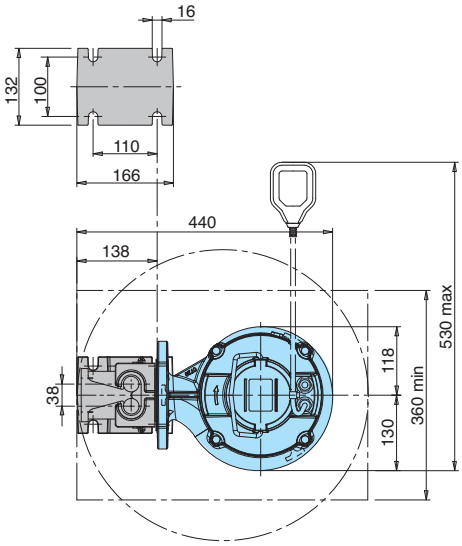

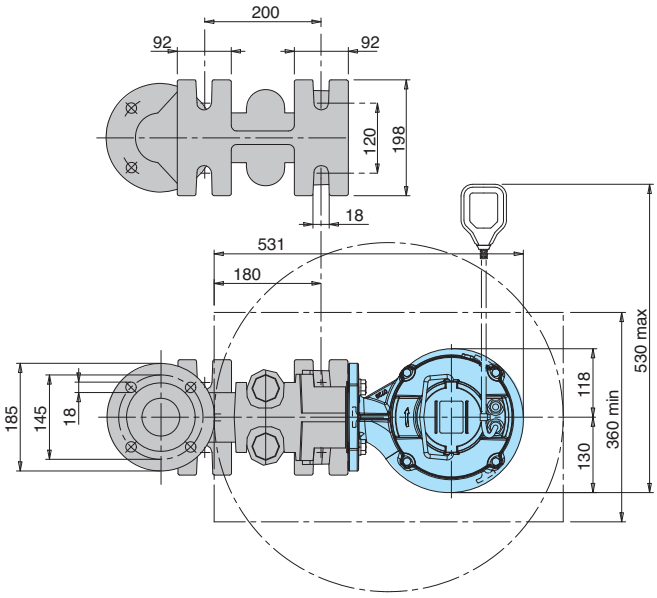

CALPEDA ROMANIA - INFINITY PUMPS SRL
Tel: 0268.33.47.47 / 0722.244.944
vanzari@calpeda.ro | www.calpeda.ro

GMC, GMV

Submersible Sewage and Drainage Pumps

Features

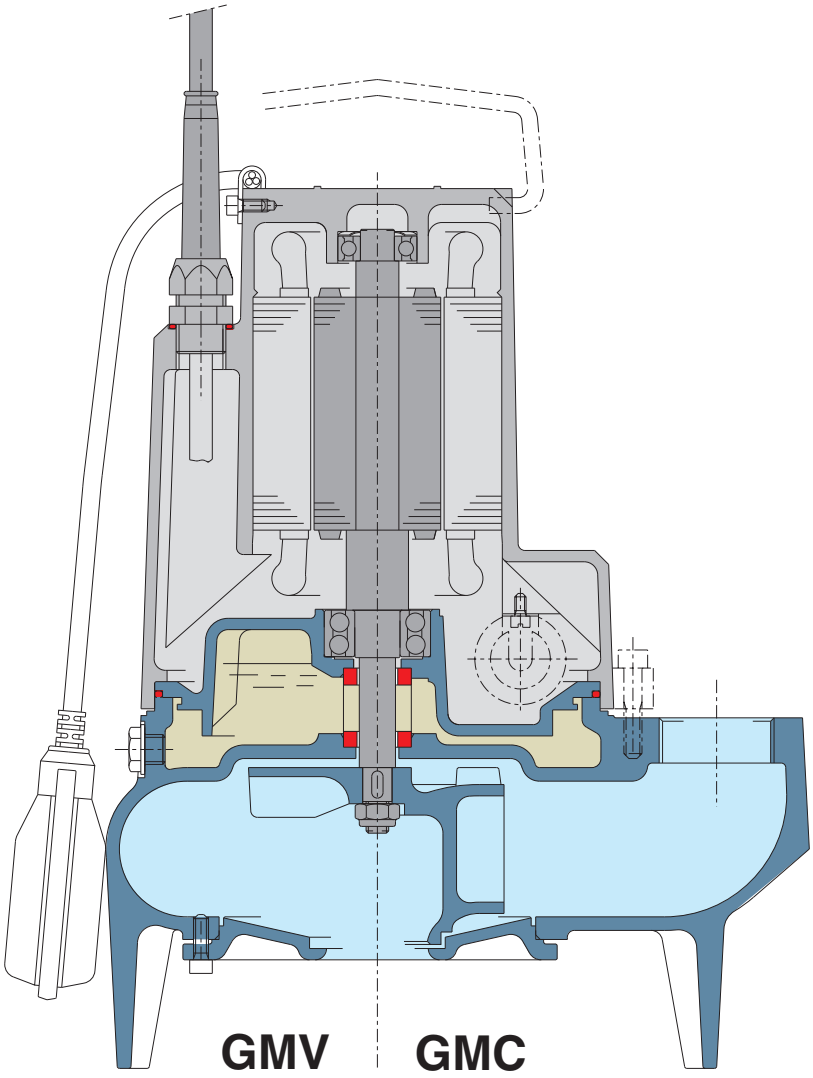

Safety
The double mechanical seal with oil chamber ensures safe separation separating the motor from water and providing further protection against accidental operation when dry.

Reliable
The lower double ball bearing ensures high reliability under all operating conditions.

Protection
The three-phase motors are equipped with integrated thermistors, which provide the motor with thermal protection. The motor cable is pre-wired to enable the user to connect directly to a control panel, providing easier installation.

Flexible installation
The availability of the pump casing with horizontal or vertical flanged ports allows the installation of pumps in all pits and wells, both small and large sizes. Installation is also possible with a duck foot coupling.

CALPEDA ROMANIA - INFINITY PUMPS SRL
Tel: 0268.33.47.47 / 0722.244.944
vanzari@calpeda.ro | www.calpeda.ro

GQG

Submersible pumps with high power grinder

Construction

Submersible pumps with high power grinder, with horizontal flanged and threaded delivery port (DN 32 PN 6 - G 1 1/2).
Double mechanical shaft seal with interposed oil chamber, to protect against dry-running.

Applications

Suitable for pumping waste water containing long filamentous, paper and textile materials and organics.
They are particularly suitable for use in domestic, residential and industrial installations.
Solid passage Ø 6 mm

Operating conditions

Liquid temperature up to 35° C.
Maximum immersion depth: 5 m.
Minimum immersion depth: 300 mm.
Continuous duty (with submerged motor).

Motor

2-pole induction motor, 50 Hz (n ≈ 2900 rpm).
GQG: three-phase 230 V ± 10%;
three-phase 400 V ± 10%;.
GQGM: single-phase 230 V ± 10%,
with float switch, thermal protection and control box with starting capacitors.
Cable: H07RN8-F, 4G1 mm² (4G1,5 mm² for GMGM 6-25), length 10 m.
Insulation class F.
Protection IP X8 (for continuous immersion)
Triple impregnation humidity-proof dry winding.
Constructed in accordance with: EN 60034-1;
EN 60335-1, EN 60335-2-41.

Materials

Component	Material
Pump casing Impeller Casing cover	Cast iron GJL 200 EN 1561
Rotating cutting blade Fixed cutting blade	Nickel-Molybdenum steel 1.4125 EN 10088 (AISI 440C)
Motor jacket Jacket cover	Chrome-nickel steel 1.4301 EN 10088 (AISI 304)
Handle	Polypropylene (with frame in AISI 304)
Shaft	Chrome-nickel steel 1.4305 EN 10088 (AISI 303)
Mechanical seal: upper lower	Ceramic alumina/Carbon/NBR
Seal lubrication oil	Oil for food/pharmaceutical machinery

Other features on request

- Other voltages.
- Frequency 60 Hz.
- Other mechanical seal.
- Cable length 20 m.
- Vertical magnetic float switch.
- Three-phase pumps with incorporated float switch.

Characteristic curves n ≈ 2900 rpm

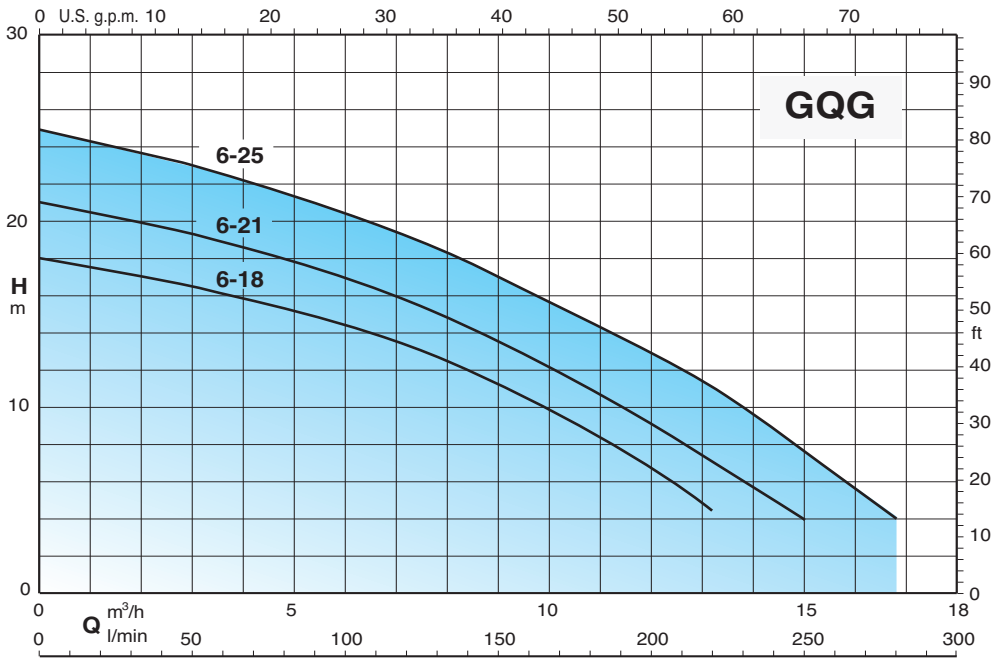

CALPEDA ROMANIA - INFINITY PUMPS SRL
Tel: 0268.33.47.47 / 0722.244.944
vanzari@calpeda.ro | www.calpeda.ro

GQG

Submersible pumps with high power grinder

Performance n ≈ 2900 rpm

3~	230V	400V	1~	230V	Capacitor		P_1	P_2		Q m³/h	0	3	6	9	12	13,2	15	16,8
	A	A		A	µf	Vc	kW	kW	HP	l/min	0	50	100	150	200	220	250	280
GQG 6-18	4	2,3	**GQGM 6-18**	7	30+80	450	1,3	0,9	1,2		18	16,5	14,5	11,2	6,5	4,5		
GQG 6-21	4,8	2,8	**GQGM 6-21**	7,5	30+80	450	1,5	1,1	1,5	**H** m	21	19,2	17	13,5	9	7	4	
GQG 6-25	6,6	3,8	**GQGM 6-25**	9,5	30+80	450	2	1,5	2		25	23	20,5	17	13	11	7,8	4

P_1 Max. power input. P_2 Rated motor power output. Density ρ = 1000 kg/m³. Kinematic viscosity ν = max 20 mm²/sec.

Dimensions and weights

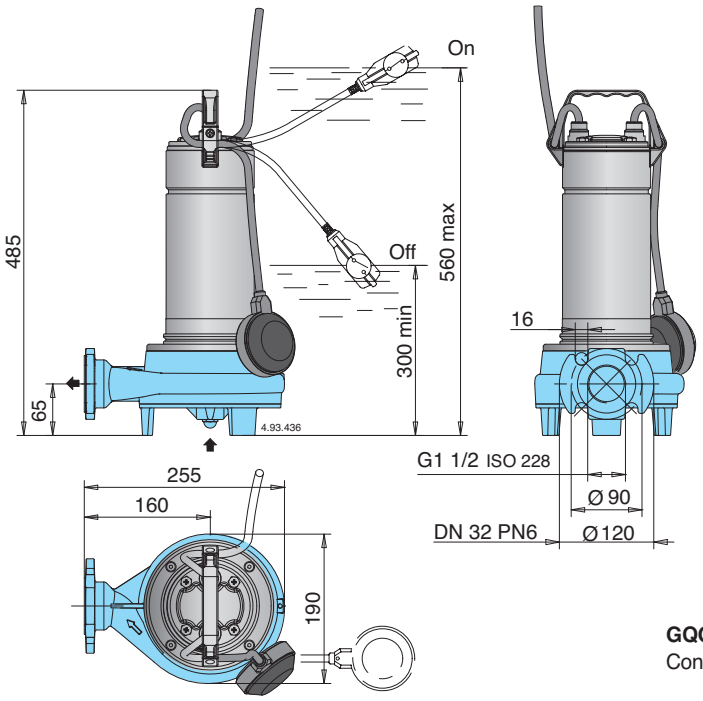

TYPE	kg	
	GQG	GQGM
GQG(M) **6-18**	18,5	19,5
GQG(M) **6-21**	18,7	19,7
GQG(M) **6-25**	19	20

GQGM
Control with box starting capacitors

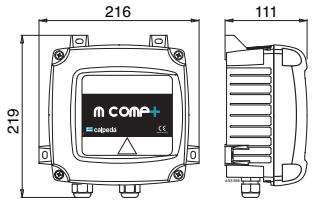

CALPEDA ROMANIA - INFINITY PUMPS SRL
Tel: 0268.33.47.47 / 0722.244.944
vanzari@calpeda.ro | www.calpeda.ro

Installation example

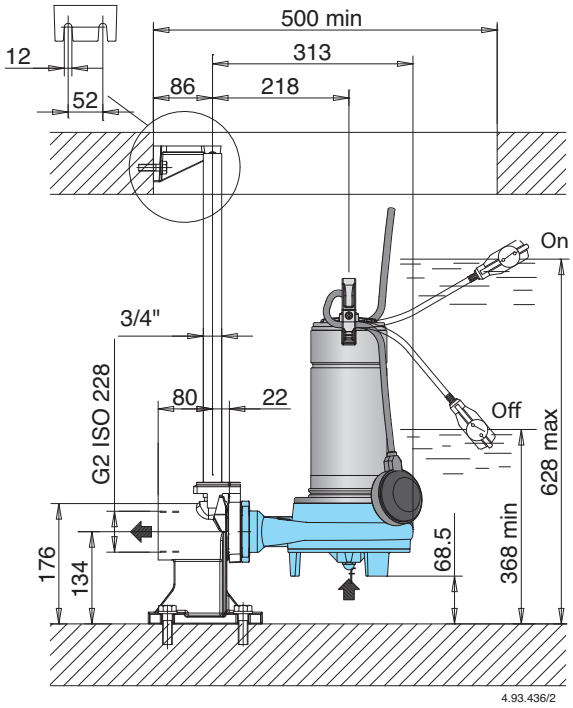

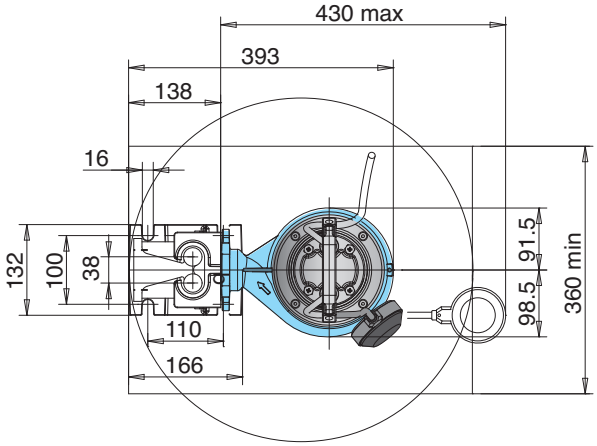

CALPEDA ROMANIA - INFINITY PUMPS SRL
Tel: 0268.33.47.47 / 0722.244.944
vanzari@calpeda.ro | www.calpeda.ro

GQG

Submersible pumps with high power grinder

Features

PATENTED

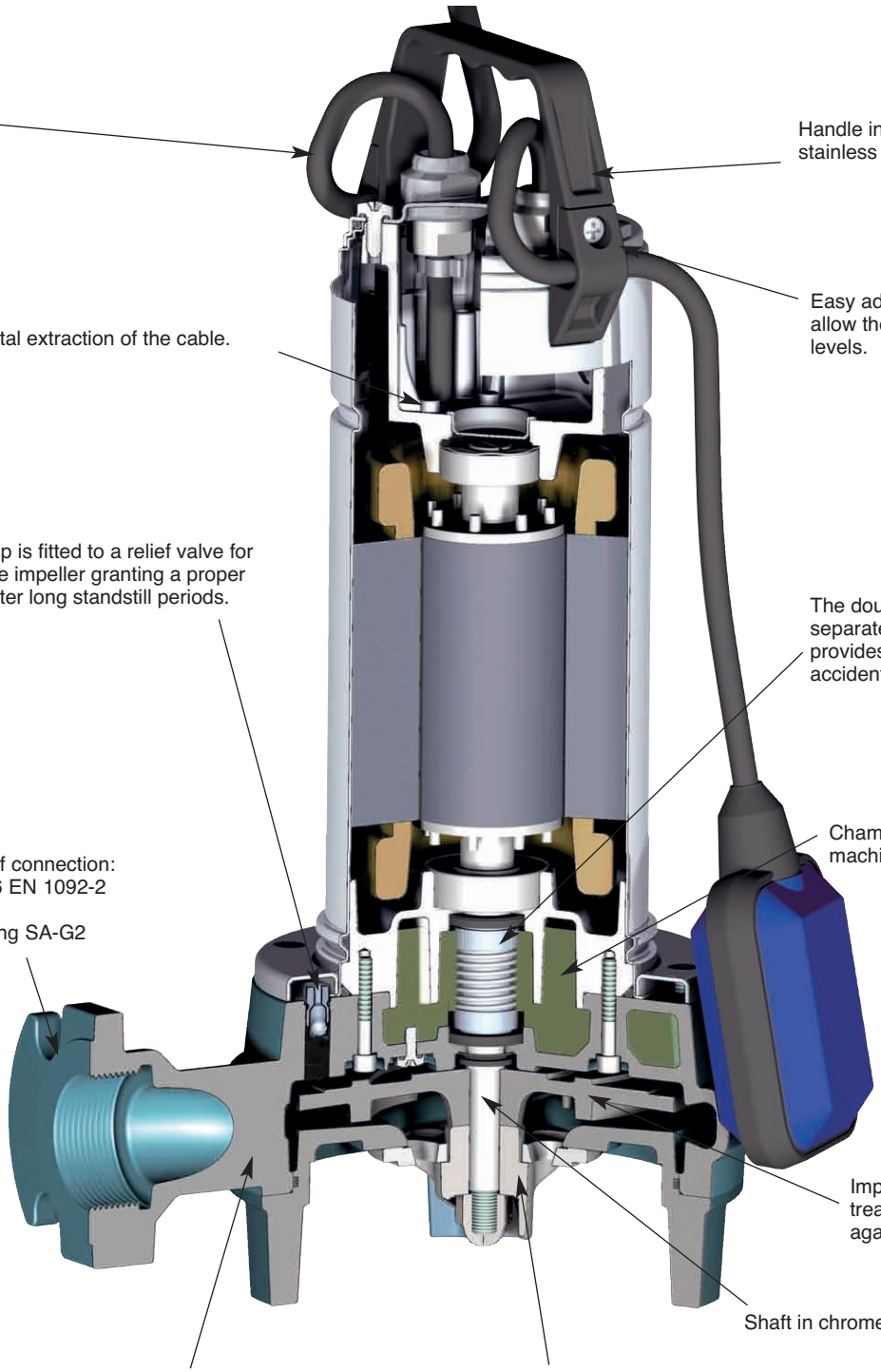

Cable length 10 m.

Handle in polypropylene, with frame in stainless steel.

Easy adjustment of the float switch: to allow the adjustement of start/stop pump levels.

Ring against accidental extraction of the cable.

Relief valve: the pump is fitted to a relief valve for air release around the impeller granting a proper pump priming also after long standstill periods.

The double shaft seal with oil chamber separates the motor from the water and provides further protection against accidental operation when dry.

Chamber with food/pharmaceutical machinery oil.

Maximum flexibility of connection:
- Flange DN 32 PN 6 EN 1092-2
- G 1 1/2 ISO 228
- for duck foot coupling SA-G2

Impeller with epoxy cataphoresis treatment for a greater protection against the rust.

Shaft in chrome-nickel stainless steel.

Pump casing and casing cover with epoxy cataphoresis treatment joined to the external paint for a greater protection against the rust.

Cutting system made of HRC 60 hardness AISI 440C stainless steel.

CALPEDA ROMANIA - INFINITY PUMPS SRL
Tel: 0268.33.47.47 / 0722.244.944
vanzari@calpeda.ro | www.calpeda.ro

GM

Submersible Pumps

CALPEDA ROMANIA - INFINITY PUMPS SRL
Tel: 0268.33.47.47 / 0722.244.944
vanzari@calpeda.ro | www.calpeda.ro

GMV

Submersible pumps with vortex impeller in cast iron EN-GJL-250 pag. 258

GMVS

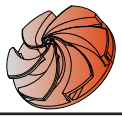

Submersible pumps with vortex impeller in cast iron with polyurethane coating pag. 265

GMC

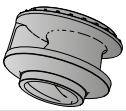

Submersible pumps with single channel impeller in cast iron EN-GJL-250 pag. 267

GMN

Submersible pumps with channels impeller in cast iron EN-GJL-250 pag. 276

GMG

Submersible pumps with grinder in cast iron EN-GJL-250 pag. 290

I-GMV

Submersible pumps with vortex impeller in stainless steel AISI316 pag. 294

I-GMC

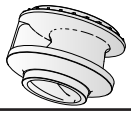

Submersible pumps with single channel impeller in stainless steel AISI316 pag. 294

I-GMN

Submersible pumps with channels impeller in stainless steel AISI316 pag. 294

B-GMV

Submersible pumps with vortex impeller in Marine Bronze B10 pag. 305

B-GMC

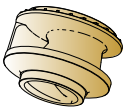

Submersible pumps with single channel impeller in Marine Bronze B10 pag. 305

B-GMN

Submersible pumps with channels impeller in Marine Bronze B10 pag. 305

CALPEDA ROMANIA - INFINITY PUMPS SRL
Tel: 0268.33.47.47 / 0722.244.944
vanzari@calpeda.ro | www.calpeda.ro

GM

Submersible Pumps

A new series of submersible pumps with high efficiency hydraulics designed to move slurry, sewage and industrial process fluids.
The range covers a wide field of use with head up to 75 m And flows up to 2300 m³/h, with a maximum solid passage up to 140 mm keeping the risk of blockage to a minimum.
Dimensionally designed for heavy demand, even on critical applications.

Explosion proof version on request.

Pump designation

B-**GM V** 4 M **50-80 A**

- Version B = bronze
  I = stainless steel
  (no indication: cast iron version)
- Series
- Impeller type V = Vortex
  C = Singlechannel
  N = Channels
  G = Grinder
- 4-6-8 poles motor (no indication: 2 poles)
- Singlephase M (no indication: threephase)
- Free passage
- Discharge diameter in mm
- Pump size

Coverage chart

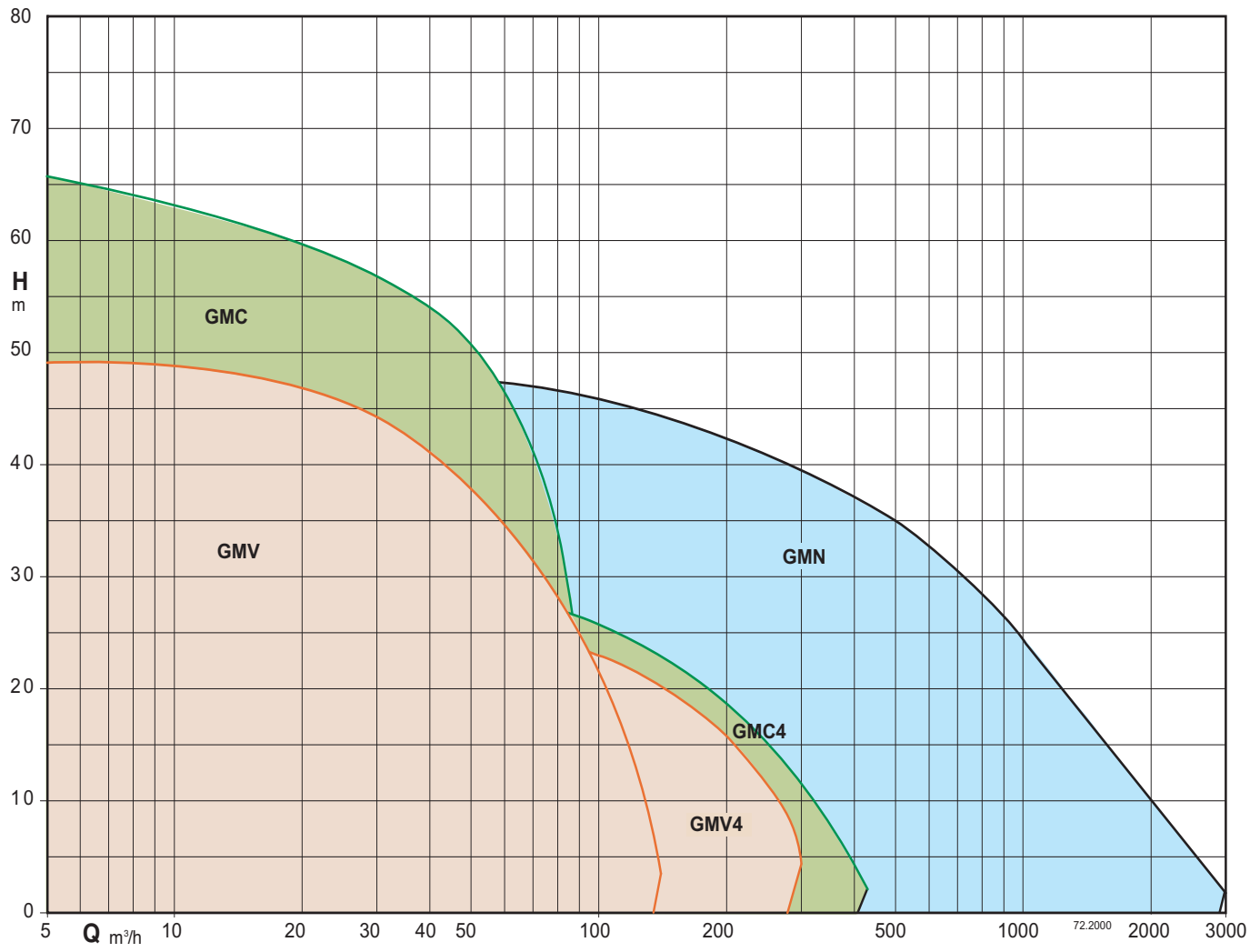

Tolerances according to UNI EN ISO 9906:2012

CALPEDA ROMANIA - INFINITY PUMPS SRL
Tel: 0268.33.47.47 / 0722.244.944
vanzari@calpeda.ro | www.calpeda.ro

GMV

Submersible pumps
with vortex impeller

Construction
Submersible pumps with vortex impeller.
Twin mechanical seal with oil chamber.
Delivery connection DN 80-100-150.

Applications
Suitable to pump slurry and sewage waters with the presence of solid and filamentous parts in suspension, they are in particular pointed out for emptying sceptic tanks in the domestic, residential and industrial installations.
Solid passage diameter from 50 to 100 mm.

Operating conditions
Liquid temperature up to 40 °C.
Maximum immersion depth: 20 m (with suitable cable length).
Continuous duty (with pump immerged at minimum level).

Main materials
Pump casing: cast iron EN-GJL-250
Impeller: cast iron EN-GJL-250+Ni
Motor casing: cast iron EN-GJL-250
Motor cover: cast iron EN-GJL-250
Shaft: stainless steel AISI 420B
Mechanical seal motor side: graphite/ceramic
Mechanical seal pump side: silicon carbite/silicon carbite

Motor
2 or 4 poles induction, 50Hz
Three-phase version: 400V ± 10%
400/690V ± 10%
Insulation Class: H
Protection degree: IP 68
N° of starting x hour: max 15 with regular intervals
Cable: H07RN-F, length 10 m
Other models: contact our sale office
Classification scheme IE3.

Coverage chart

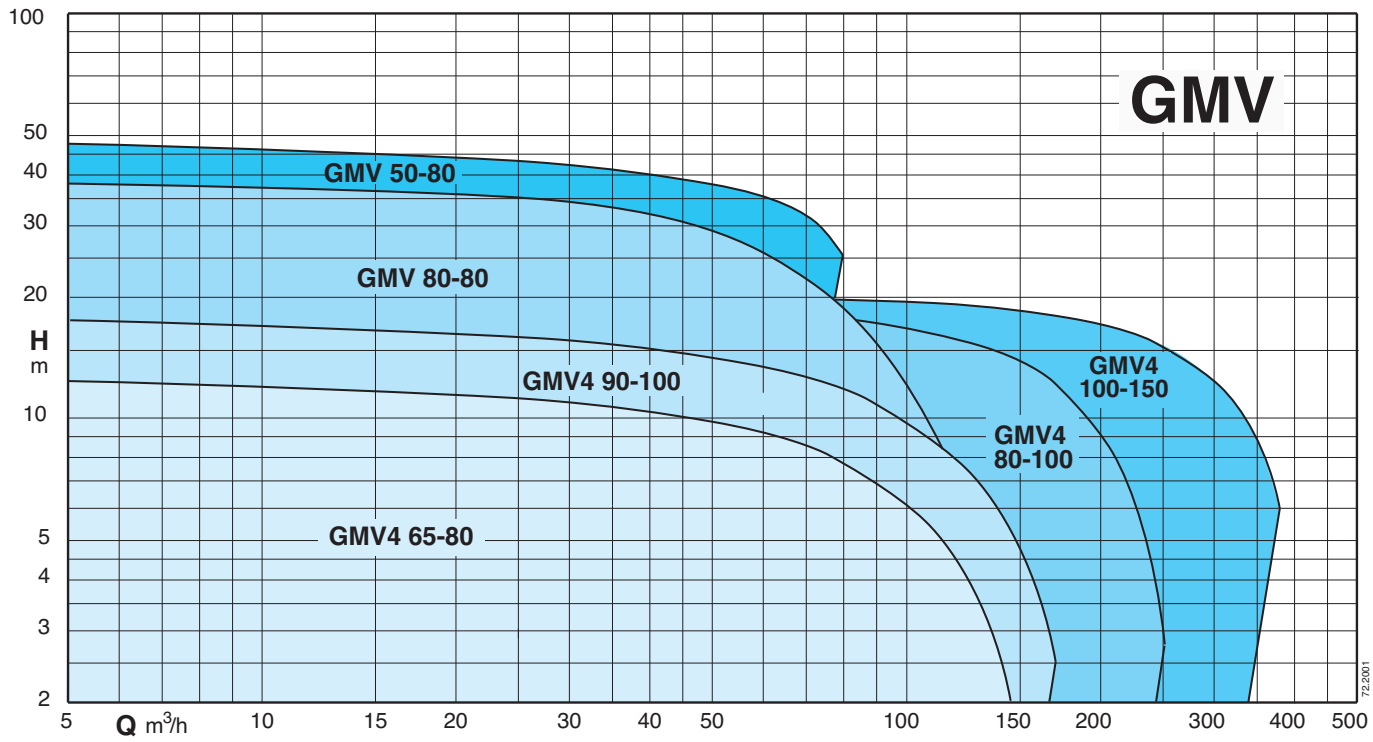

CALPEDA ROMANIA - INFINITY PUMPS SRL
Tel: 0268.33.47.47 / 0722.244.944
vanzari@calpeda.ro | www.calpeda.ro

GMV

Submersible pumps
with vortex impeller

Technical data

TYPE	P_2 kW	I_N A	Power Supply	r.p.m.	Starting	DN mm	Free passage Ø mm	Thermal protector	Humidity probe	ATEX Eex
GMV 50-80F/A	3,1	5,8	3~ 400V	2850	D.O.L.	80	50	NO	NO	✔
GMV 50-80E/A	3,9	7,2	3~ 400V	2850	D.O.L.	80	50	NO	NO	✔
GMV 50-80D/A	5	9,1	3~ 400/690V	2850	Y/Δ	80	50	●	●	✔
GMV 50-80C/A	5,7	10,4	3~ 400/690V	2850	Y/Δ	80	50	●	●	✔
GMV 50-80B/A	16,6	29,8	3~ 400/690V	2850	Y/Δ	80	50	●	●	✔
GMV 50-80A/A	18,2	32,6	3~ 400/690V	2850	Y/Δ	80	50	●	●	✔
GMV 70-80B/B	8,2	14,7	3~ 400/690V	2850	Y/Δ	80	70	●	●	✔
GMV 70-80A/B	9	16,2	3~ 400/690V	2850	Y/Δ	80	70	●	●	✔
GMV 80-80B/A	14,9	26,8	3~ 400/690V	2850	Y/Δ	80	80	●	●	✔
GMV 80-80A/A	18,2	32,6	3~ 400/690V	2850	Y/Δ	80	80	●	●	✔
GMV 80-80S/A	22,4	38,9	3~ 400/690V	2850	Y/Δ	80	80	●	●	✔
GMV4 65-80D/A	2,3	4,4	3~ 400V	1450	D.O.L.	80	65	NO	NO	✔
GMV4 65-80C/A	3,2	6,2	3~ 400V	1450	D.O.L.	80	65	NO	NO	✔
GMV4 65-80B/A	3,5	6,8	3~ 400/690V	1450	Y/Δ	80	65	●	●	✔
GMV4 65-80A/A	4,9	9,9	3~ 400/690V	1450	Y/Δ	80	65	●	●	✔
GMV4 90-100B/A	6	11,5	3~ 400/690V	1450	Y/Δ	100	90	●	●	✔
GMV4 90-100A/A	7,5	14,3	3~ 400/690V	1450	Y/Δ	100	90	●	●	✔
GMV4 80-100C/A	10	19	3~ 400/690V	1450	Y/Δ	100	80	●	●	✔
GMV4 80-100B/A	12,9	24,1	3~ 400/690V	1450	Y/Δ	100	80	●	●	✔
GMV4 80-100A/A	16	29,7	3~ 400/690V	1450	Y/Δ	100	80	●	●	✔
GMV4 80-100S/A	27	49,6	3~ 400/690V	1450	Y/Δ	100	80	●	●	✔
GMV4 100-150E/A	27	49,6	3~ 400/690V	1450	Y/Δ	150	100	●	●	✔

P_2 Rated power output I_N Rated current ● Standard ✔ ATEX Eex Version on demand

CALPEDA ROMANIA - INFINITY PUMPS SRL
Tel: 0268.33.47.47 / 0722.244.944
vanzari@calpeda.ro | www.calpeda.ro

GMV

Submersible pumps
with vortex impeller

Characteristic curves

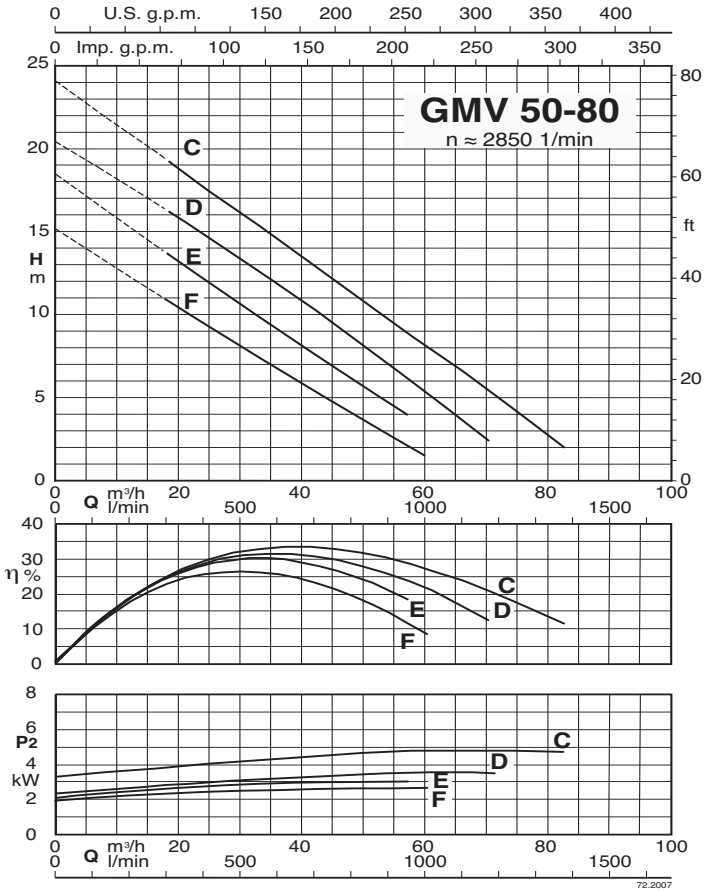

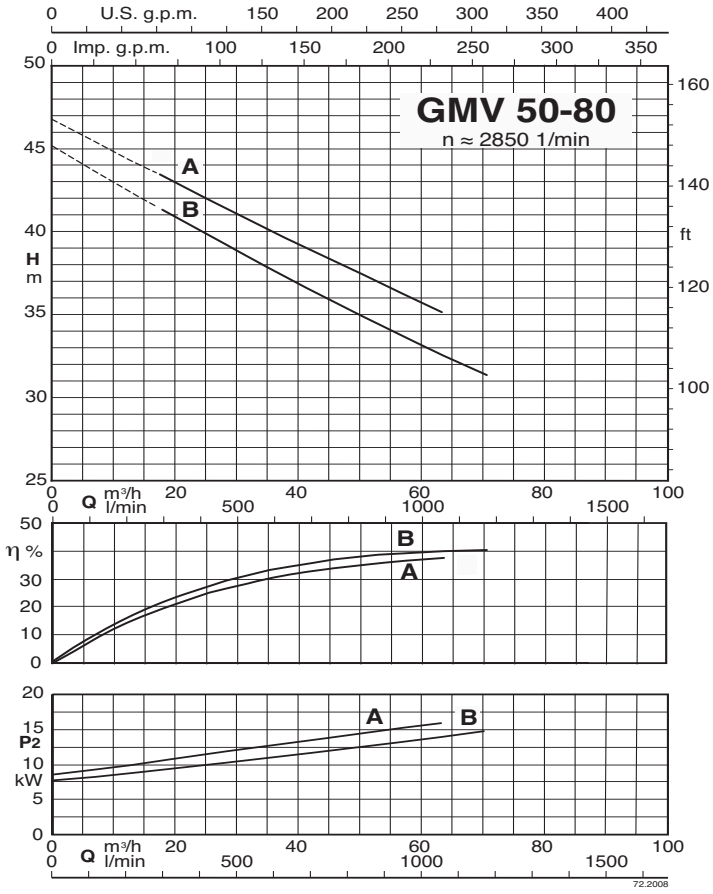

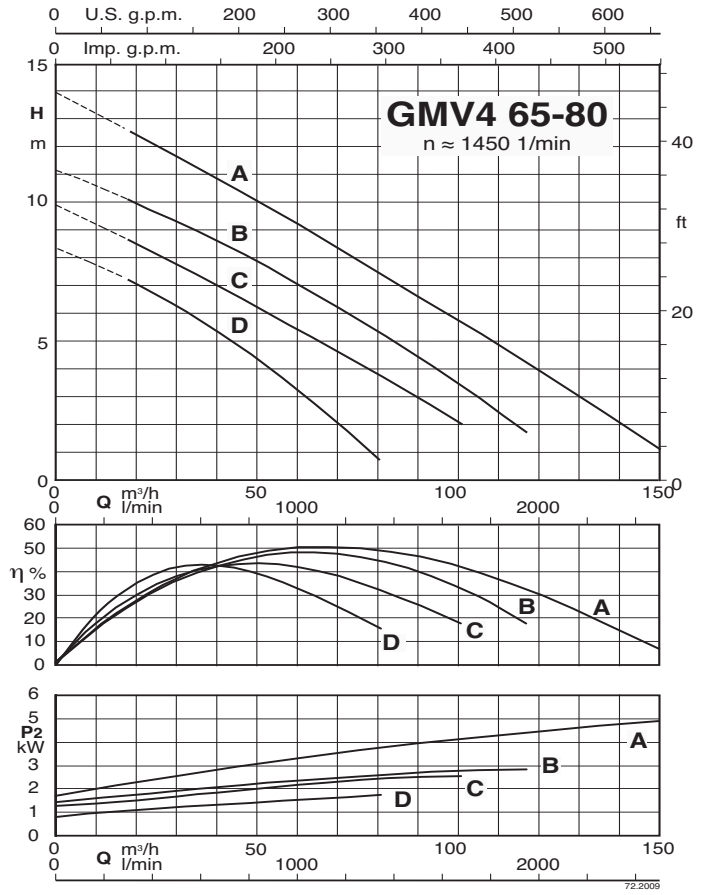

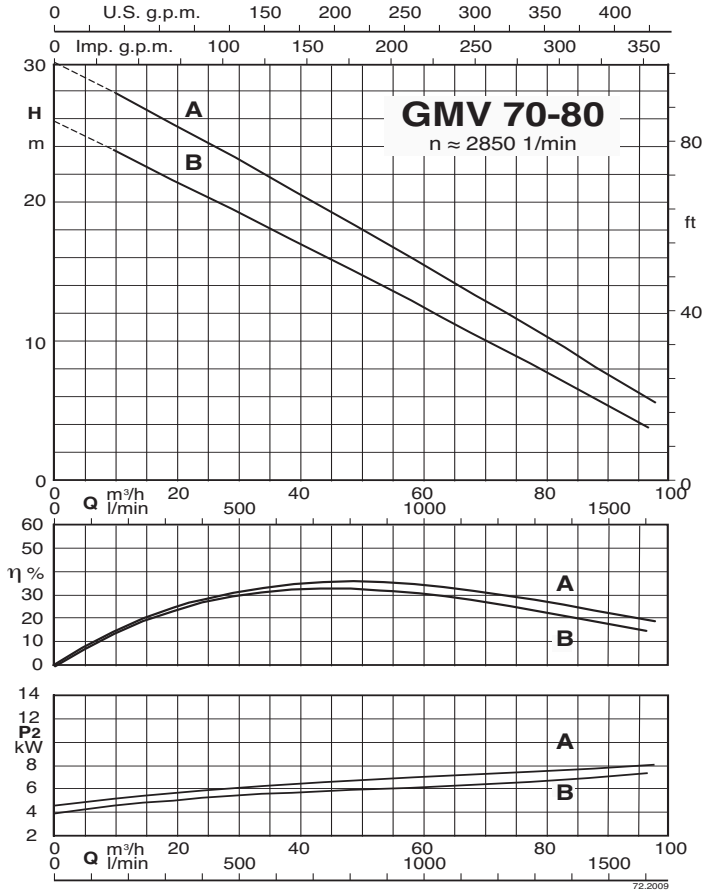

CALPEDA ROMANIA - INFINITY PUMPS SRL
Tel: 0268.33.47.47 / 0722.244.944
vanzari@calpeda.ro | www.calpeda.ro

GMV

Submersible pumps
with vortex impeller

Characteristic curves

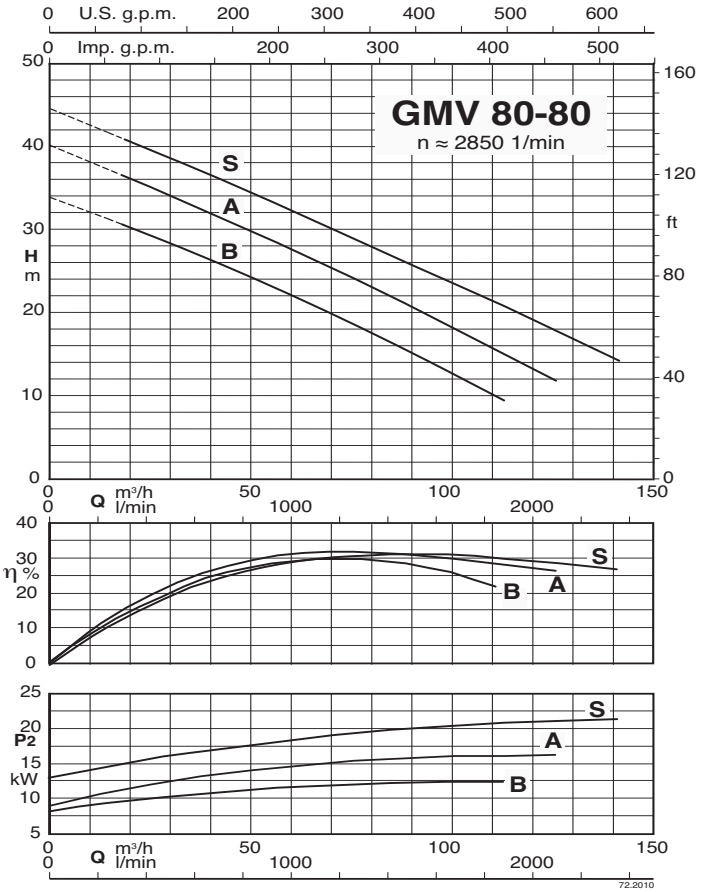

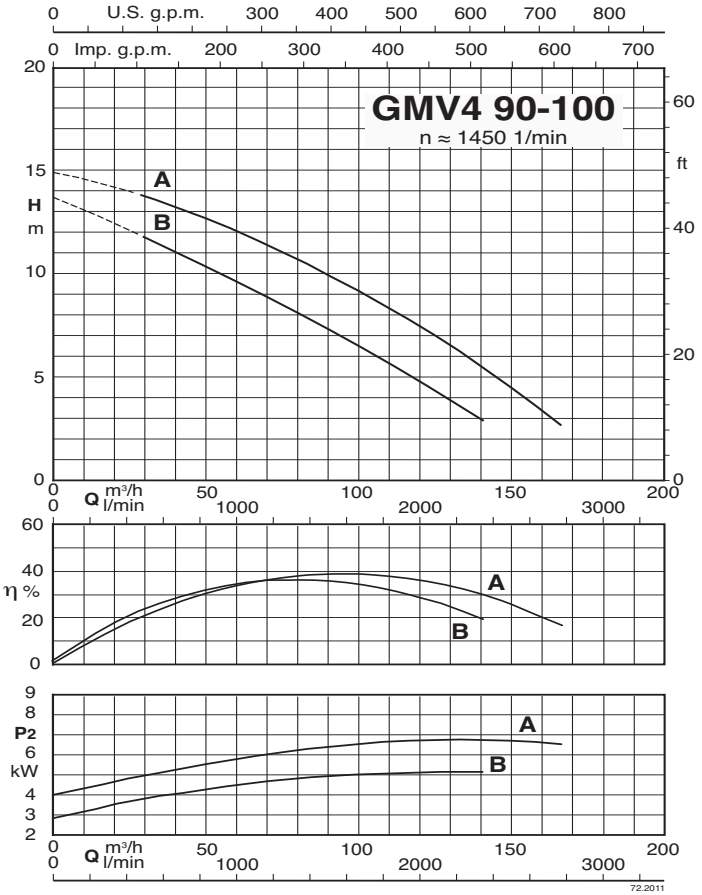

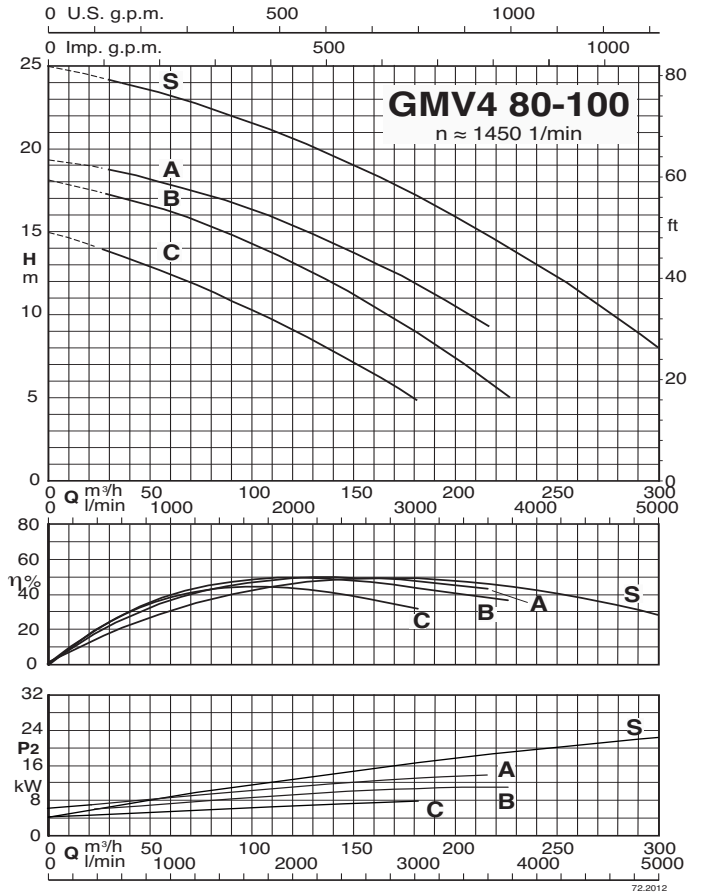

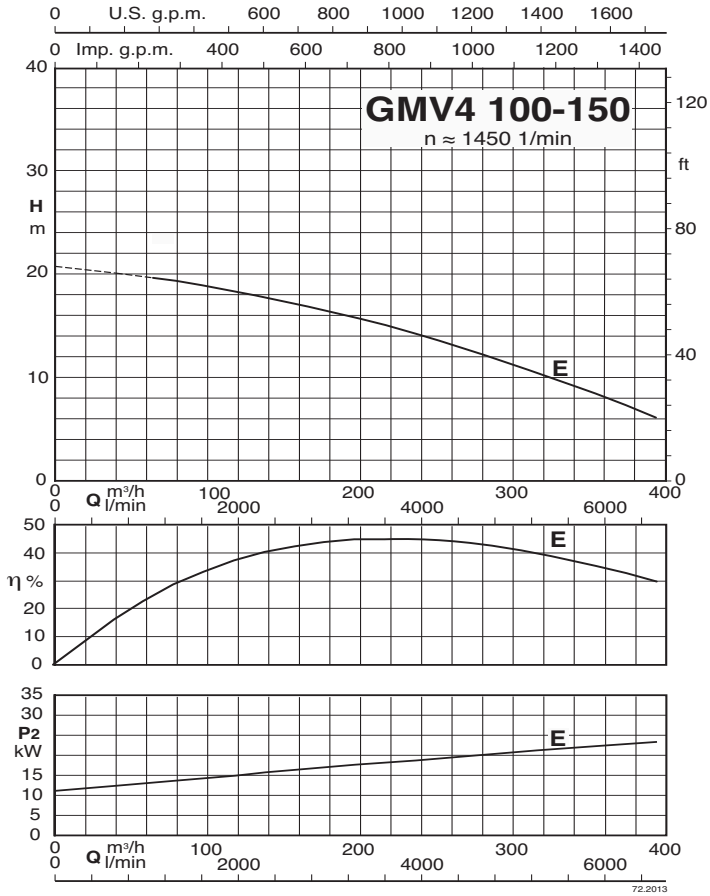

CALPEDA ROMANIA - INFINITY PUMPS SRL
Tel: 0268.33.47.47 / 0722.244.944
vanzari@calpeda.ro | www.calpeda.ro

GMV

Submersible pumps
with vortex impeller

Dimensions and weights

GMV 50-80
GMV 80-80
GMV4 65-80

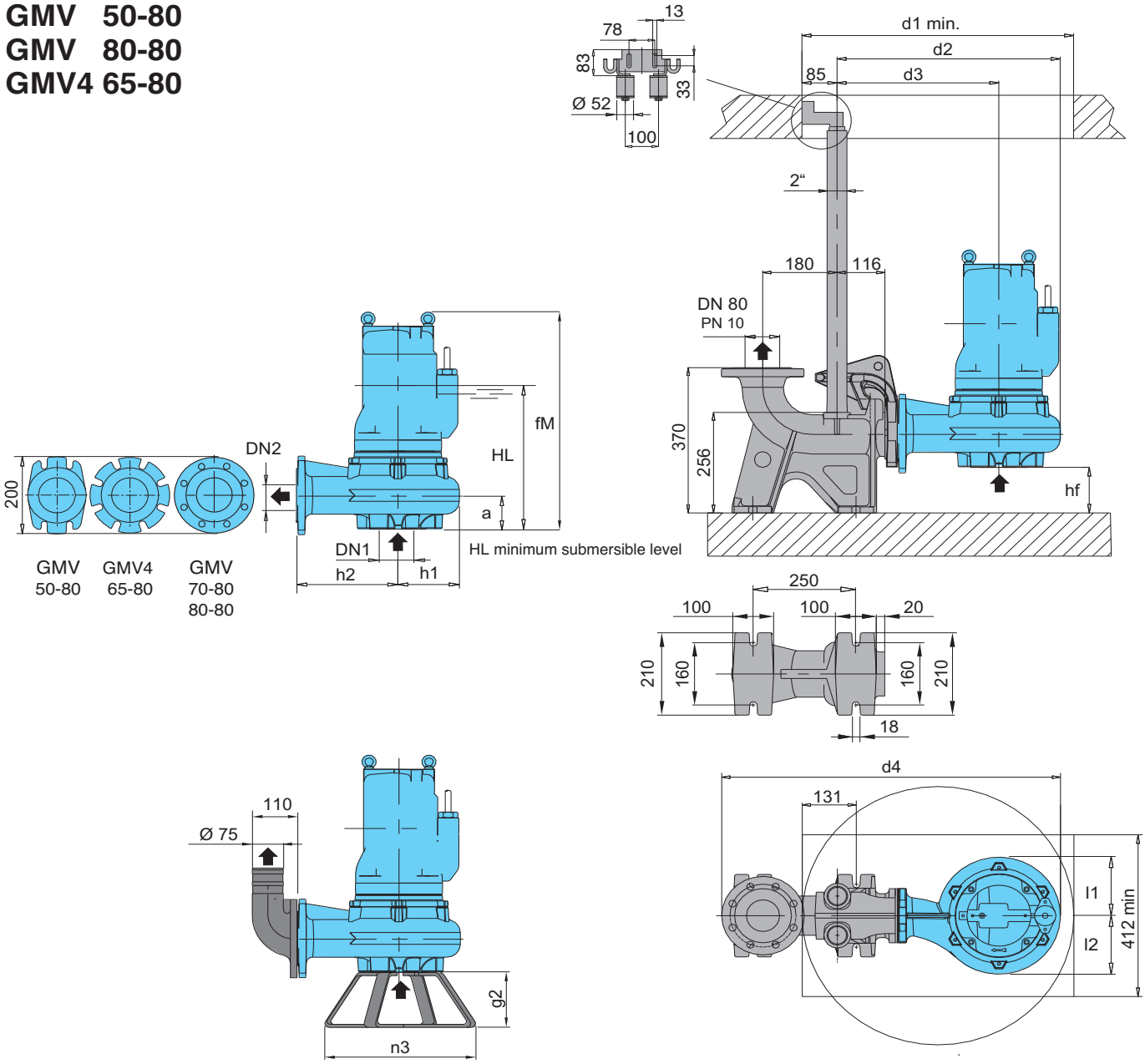

Version with foot and 90° elbow

Version with duck foot coupling

TYPE	EN 1092-2 PN 10		Dimensions mm														Weight kg
	DN1	DN2	fM	HL	hf	a	l1	l2	d1	d2	d3	d4	h1	h2	n3	g2	
GMV 50-80F/A GMV 50-80E/A	80	80	487	347	116	84	149	149	660	541	392	821	149	246	364	140	62
GMV 50-80D/A GMV 50-80C/A	80	80	553	375	116	84	149	149	660	541	392	821	149	246	364	140	76
GMV 50-80B/A GMV 50-80A/A	80	80	867	516	122	78	164	164	800	593	428	873	185	241	500	150	196
GMV 70-80B/B GMV 70-80A/B	80	80	829	500	65	135	167	167	800	633	446	913	185	280	400	140	165
GMV 80-80B/A GMV 80-80A/A	100	80	900	548	60	140	169	175	900	671	481	950	190	315	400	140	193
GMV 80-80S/A	100	80	1328	658	58	142	193	193	800	672	483	952	193	316	500	150	320
GMV4 65-80D/A GMV4 65-80C/A	80	80	516	380	80	121	143	169	700	548	396	828	152	250	364	140	64
GMV4 65-80B/A GMV4 65-80A/A	80	80	582	400	80	121	143	169	700	548	396	828	152	250	364	140	79

CALPEDA ROMANIA - INFINITY PUMPS SRL
Tel: 0268.33.47.47 / 0722.244.944
vanzari@calpeda.ro | www.calpeda.ro

GMV

Submersible pumps
with vortex impeller

Dimensions and weights

GMV4 90-100
GMV4 80-100

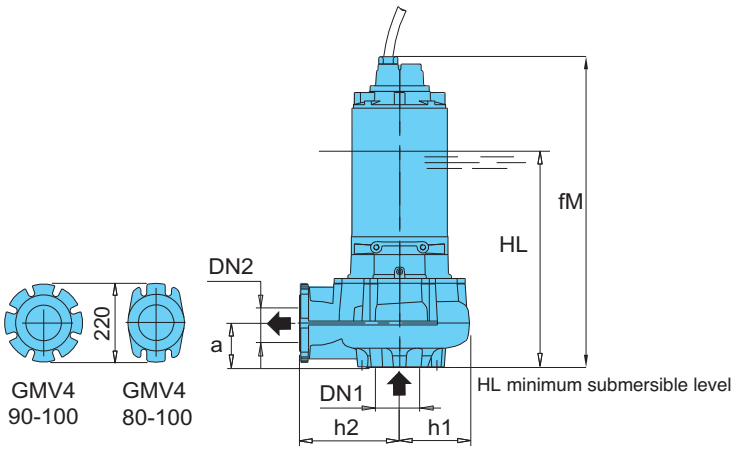

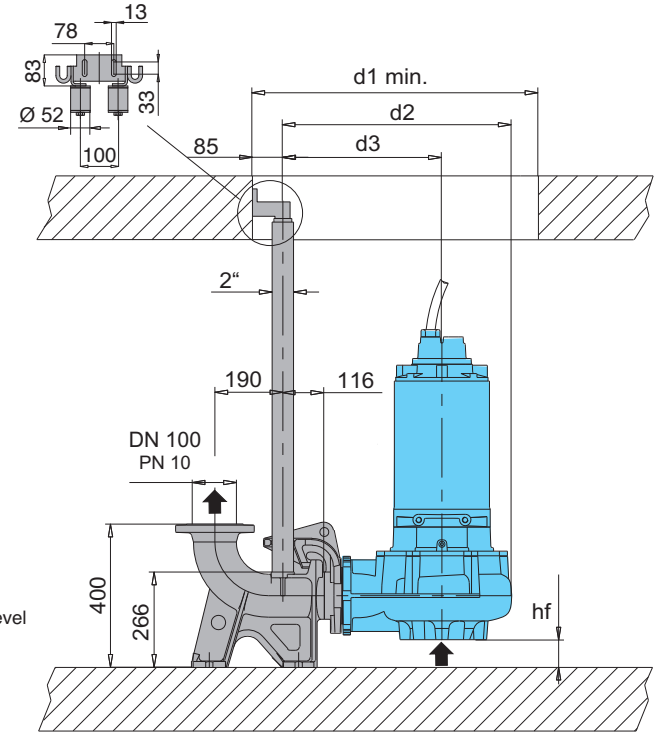

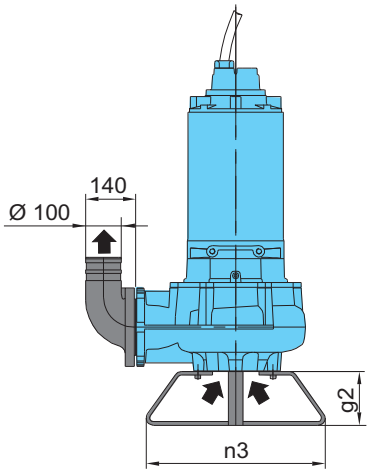

Version with foot and 90° elbow

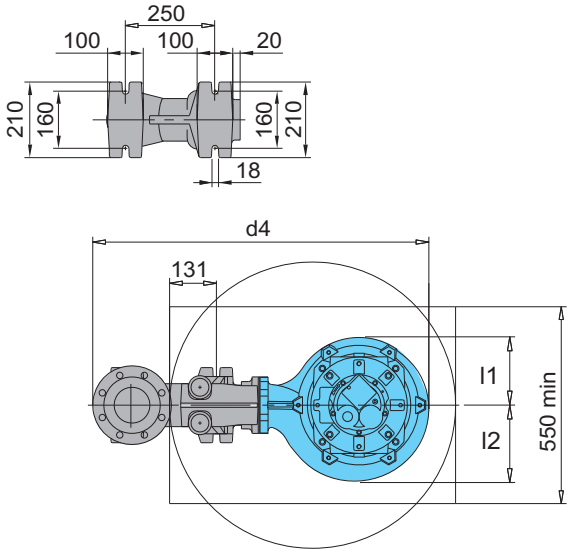

Version with duck foot coupling

TYPE	EN 1092-2 PN 10		Dimensions mm														Weight kg
	DN1	DN2	fM	HL	hf	a	l1	l2	d1	d2	d3	d4	h1	h2	n3	g2	
GMV4 90-100B/A	125	100	829	490	89	111	180	180	800	633	443	933	241	277	500	150	165
GMV4 90-100A/A																	
GMV4 80-100C/A	125	100	921	570	54	147	189	212	800	640	445	940	195	279	500	150	205
GMV4 80-100B/A																	
GMV4 80-100A/A																	
GMV4 80-100S/A	125	100	1343	670	54	146	193	212	800	640	441	936	200	280	500	150	325

CALPEDA ROMANIA - INFINITY PUMPS SRL
Tel: 0268.33.47.47 / 0722.244.944
vanzari@calpeda.ro | www.calpeda.ro

GMV

Submersible pumps
with vortex impeller

Dimensions and weights

GMV4 100-150

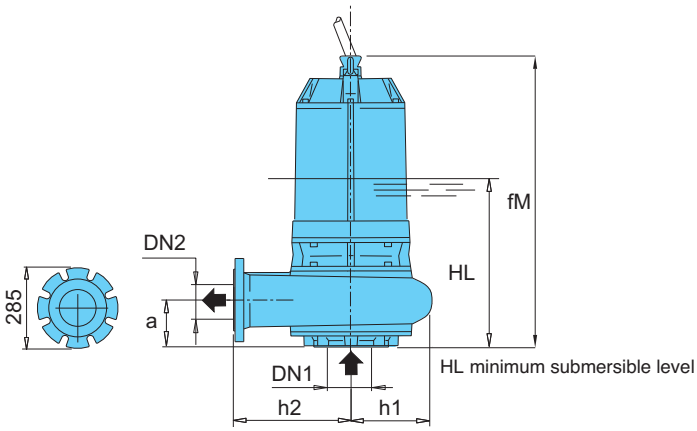

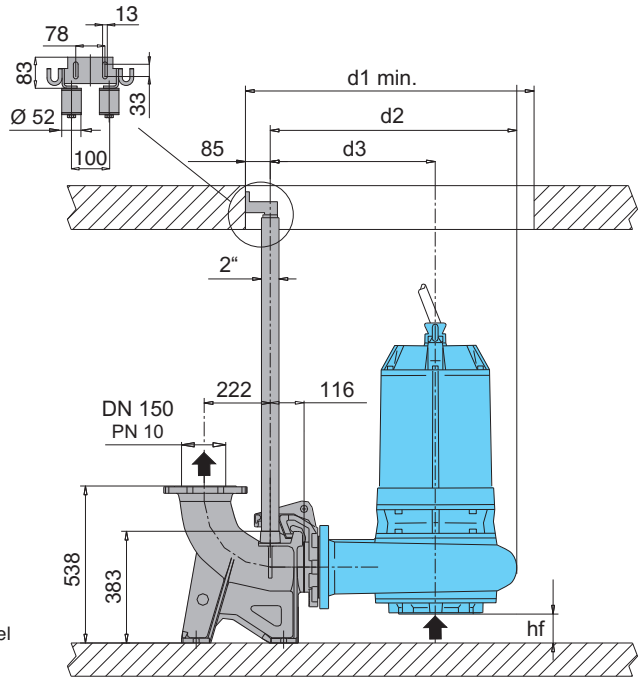

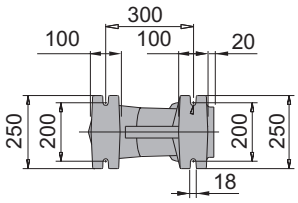

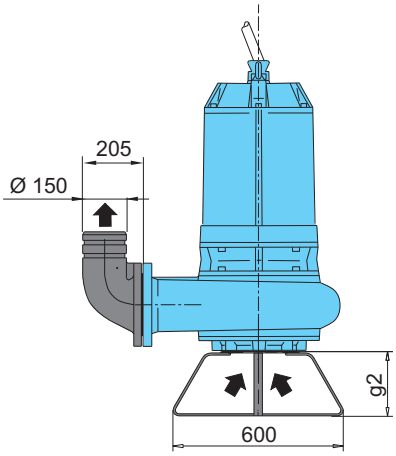

Version with foot and 90° elbow

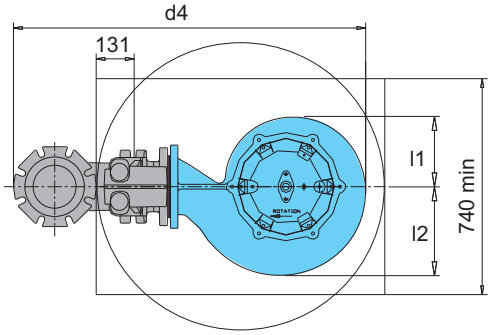

Version with duck foot coupling

TYPE	EN 1092-2 PN 10		Dimensions mm														Weight kg
	DN1	DN2	fM	HL	hf	a	l1	l2	d1	d2	d3	d4	h1	h2	n3	g2	
GMV4 100-150E/A	150	150	1359	710	114	146	193	223	850	675	469	1040	206	280	600	225	355

CALPEDA ROMANIA - INFINITY PUMPS SRL
Tel: 0268.33.47.47 / 0722.244.944
vanzari@calpeda.ro | www.calpeda.ro

GMVS

Submersible pumps vortex
with polyurethane coated hydraulic parts

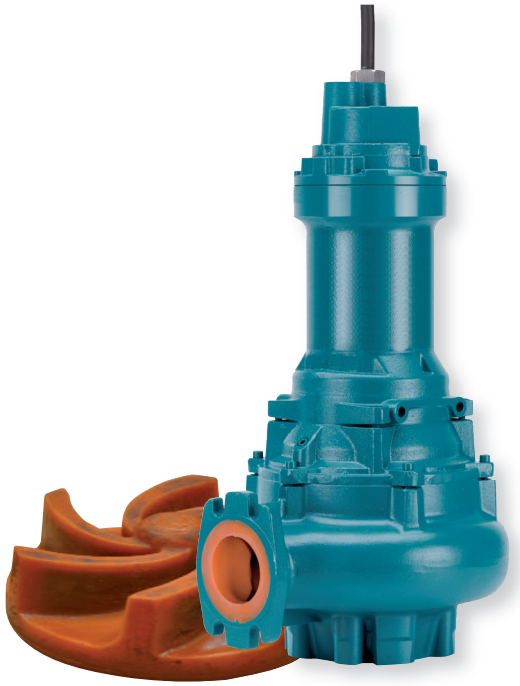

Construction
Submersible pumps with vortex impeller
Impeller in Polyurethane with a stainless steel core - Pump casing in Cast iron EN-GJL-250, with polyurethane coating for parts subject to high wear.
Twin mechanical seal with oil chamber.
Delivery connection DN 80.

Applications
The pumps are designed to suit applications in plants with an high sand presence, in marble work companies, in the ceramic industry, crystals machining or industrial processes handling abrasives liquids.
Solid passage diameter from 35 mm.

Operating conditions
Liquid temperature up to 40 °C.
Maximum immersion depth: 20 m (with suitable cable length).
Continuous duty (with pump immerged at minimum level).

Main materials
Pump casing: cast iron EN-GJL-250 with polyurethane coating
Impeller: Polyurethane with a stainless steel core
Motor casing: cast iron EN-GJL-250
Motor cover: cast iron EN-GJL-250
Shaft: stainless steel AISI 420B
Mechanical seal motor side: graphite/ceramic
Mechanical seal pump side: silicon carbite/silicon carbite

Motor
2 or 4 poles induction, 50Hz
Three-phase version: 400/690V ± 10%
Insulation Class: H
Protection degree: IP 68
N° of starting x hour: max 15 with regular intervals
Cable: H07RN-F, length 10 m
Other models: contact our sale office
Classification scheme IE3.

Coverage chart

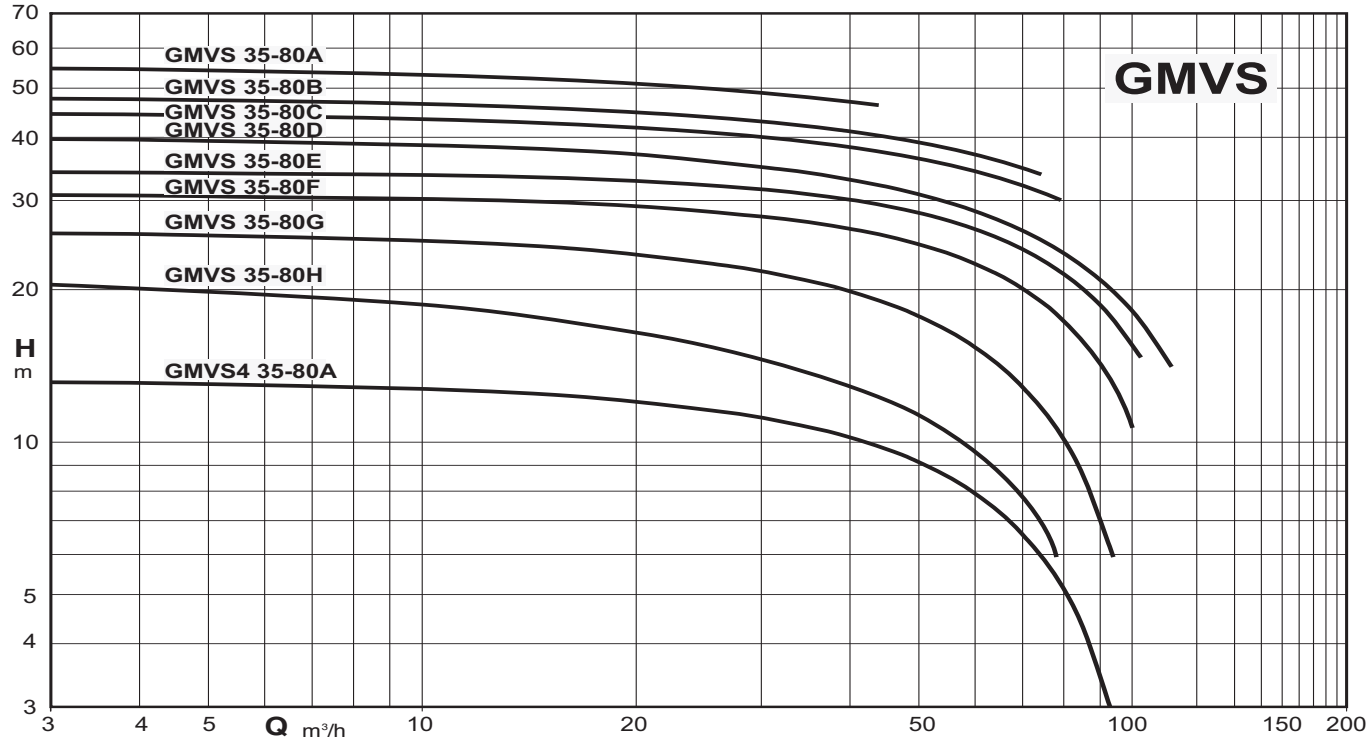

CALPEDA ROMANIA - INFINITY PUMPS SRL
Tel: 0268.33.47.47 / 0722.244.944
vanzari@calpeda.ro | www.calpeda.ro

GMVS

Submersible pumps vortex
with polyurethane coated hydraulic parts

Technical data

TYPE	P_2 kW	I_N A	Power Supply	r.p.m.	Starting	DN mm	Free passage Ø mm	Thermal protector	Humidity probe	ATEX Eex
GMVS 35-80H/A	9	16,2	3~ 400/690V	2850	Y/Δ	80	35	●	●	
GMVS 35-80G/A	12	24,7	3~ 400/690V	2850	Y/Δ	80	35	●	●	
GMVS 35-80F/A	16,6	29,8	3~ 400/690V	2850	Y/Δ	80	35	●	●	
GMVS 35-80E/A	16,6	29,8	3~ 400/690V	2850	Y/Δ	80	35	●	●	
GMVS 35-80D/A	16,6	29,8	3~ 400/690V	2850	Y/Δ	80	35	●	●	
GMVS 35-80C/A	16,6	29,8	3~ 400/690V	2850	Y/Δ	80	35	●	●	
GMVS 35-80B/A	16,6	29,8	3~ 400/690V	2850	Y/Δ	80	35	●	●	
GMVS 35-80A/A	16,6	29,8	3~ 400/690V	2850	Y/Δ	80	35	●	●	
GMVS4 35-80A/A	6	11,5	3~ 400/690V	1450	Y/Δ	80	35	●	●	

P_2 Rated power output I_N Rated current ● Standard ✔ ATEX Eex Version on demand

Dimensions and weights

GMVS 35-80
GMVS4 35-80

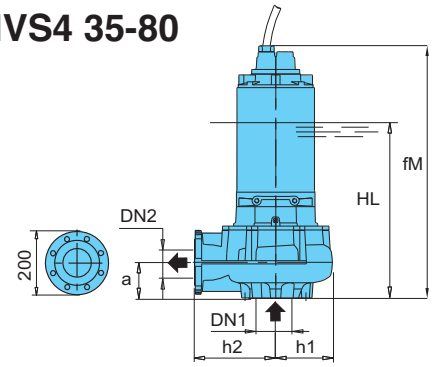

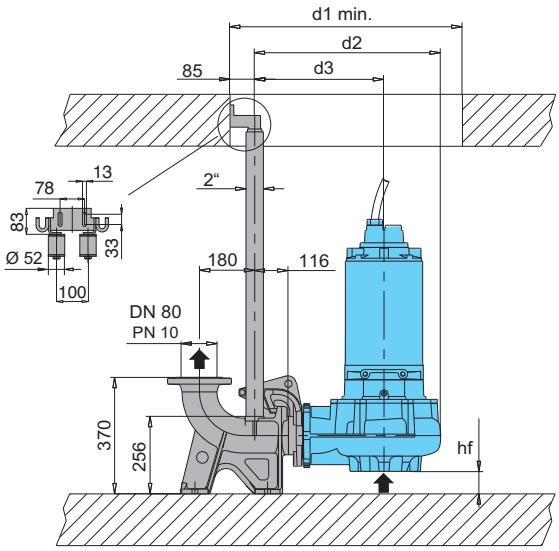

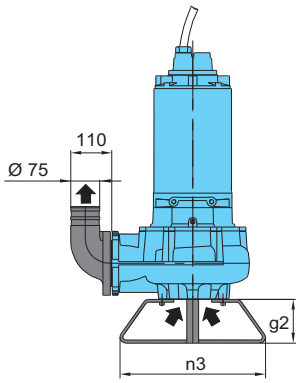

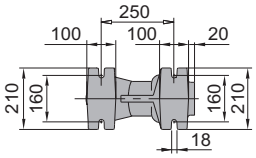

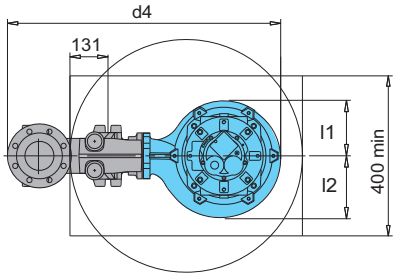

TYPE	EN 1092-2 PN 10		Dimensions mm														Weight kg
	DN1	DN2	fM	HL	hf	a	l1	l2	d1	d2	d3	d4	h1	h2	n3	g2	
GMVS 35-80H/A	80	80	796	468	122	78	165	165	800	593	408	873	185	242	400	140	165
GMVS 35-80G/A	80	80	867	514	124	100	165	165	800	593	408	873	185	242	500	150	191
GMVS 35-80F/A																	
GMVS 35-80E/A																	
GMVS 35-80D/A																	
GMVS 35-80C/A																	
GMVS 35-80B/A																	
GMVS 35-80A/A																	
GMVS4 35-80A/A	80	80	796	468	122	78	165	165	800	593	408	873	185	242	400	140	160

CALPEDA ROMANIA - INFINITY PUMPS SRL
Tel: 0268.33.47.47 / 0722.244.944
vanzari@calpeda.ro | www.calpeda.ro

GMC

Submersible pumps
with single channel impeller

Construction

Submersible pumps with single channel impeller.
Twin mechanical seal with oil chamber (lip-seal motor side up to 1,4 kW).
Delivery connection DN 50-65-80-100-150

Applications

Suitable to pump slurry, sewage, waste water (non-corrosive).
In industrial and residential installations and drainag applications
Solid passage from 40 to 100mm

Operating conditions

Liquid temperature up to 40 °C.
Maximum immersion depth: 20 m (with suitable cable length).
Continuous duty (with pump immerged at minimum level).

Main materials

Pump casing: cast iron EN-GJL-250 - Impeller: cast iron EN-GJL-250+Ni
Motor casing, Motor cover: cast iron EN-GJL-250
Motor shaft: stainless steel AISI 420B
Lip seal made of nitrile up to 1,4 kW
Mechanical seal motor side: graphite/ceramic over 1,4 kW
Mechanical seal pump side: silicon carbite/silicon carbite

Motor

2 or 4 poles induction, 50Hz
Single-phase version: 230V ± 10%, with float switch and built-in capacitor.
Three-phase version: 400V ± 10%, 400/690V ± 10%
Insulation class: H
Protection degree: IP 68
N° of starting x hour: max 15 with regular intervals
Cable: H07RN-F, length 10 m
Other models: contact our sale office
Classification scheme IE3.

Coverage chart

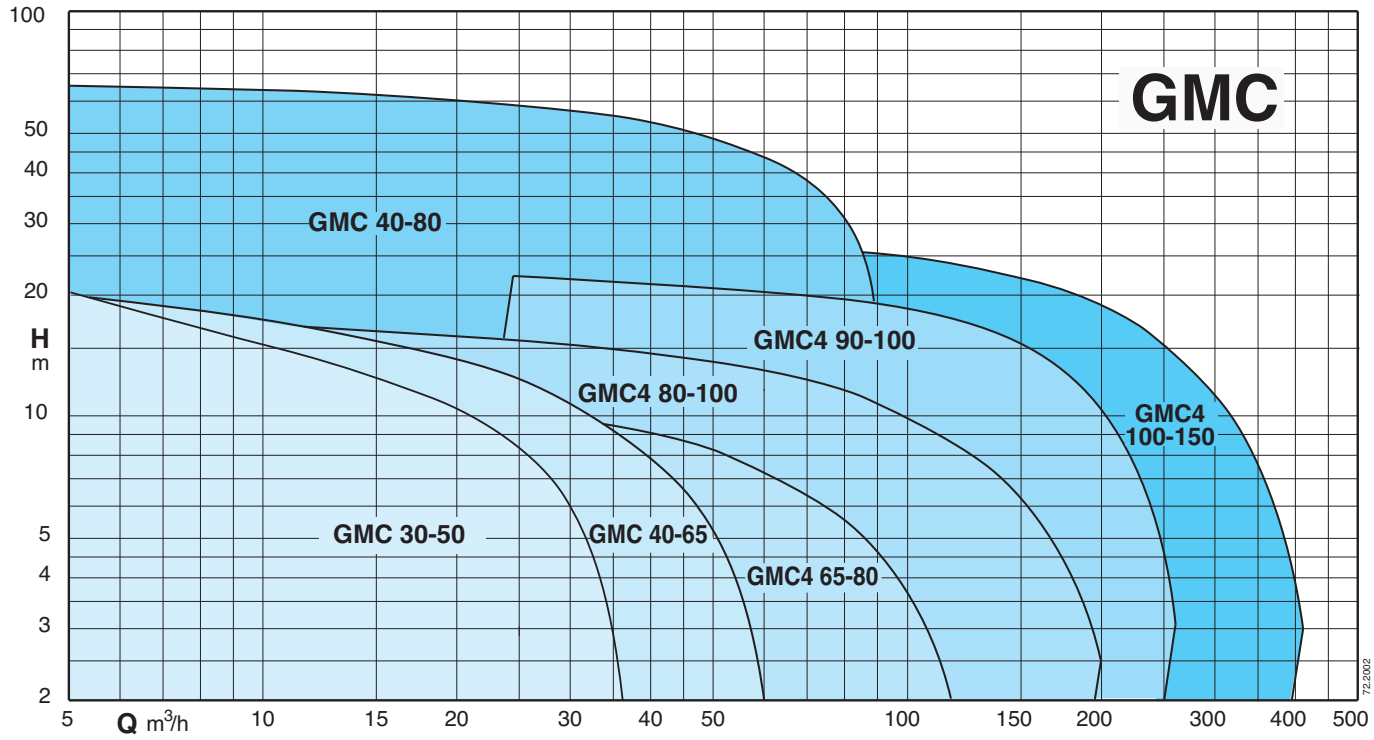

CALPEDA ROMANIA - INFINITY PUMPS SRL
Tel: 0268.33.47.47 / 0722.244.944
vanzari@calpeda.ro | www.calpeda.ro

GMC

Submersible pumps
with single channel impeller

Technical data

TYPE	P_2 kW	I_N A	Power Supply	r.p.m.	Starting	DN mm	Free passage Ø mm	Thermal protector	Humidity probe	ATEX Eex
GMCM 30-50B/A	1,4	8,4	1~ 230V	2850	D.O.L.	50	30	●	NO	
GMC 30-50B/A	1,9	3,5	3~ 400V	2850	D.O.L.	50	30	NO	NO	
GMC 30-50A/A	1,9	3,5	3~ 400V	2850	D.O.L.	50	30	NO	NO	
GMCM 40-65B/A	1,9	11,4	1~ 230V	2850	D.O.L.	65	40	NO	NO	✔
GMC 40-65B/A	2,4	4,5	3~ 400V	2850	D.O.L.	65	40	NO	NO	✔
GMC 40-65A/A	2,4	4,5	3~ 400V	2850	D.O.L.	65	40	NO	NO	✔
GMC 40-80C/A	13,8	24,8	3~ 400/690V	2850	Y/Δ	80	40	●	●	✔
GMC 40-80B/A	16,6	29,8	3~ 400/690V	2850	Y/Δ	80	40	●	●	✔
GMC 40-80A/A	18,2	32,6	3~ 400/690V	2850	Y/Δ	80	40	●	●	✔
GMC4M 65-80C/A	1,2	6,9	1~ 230V	1450	D.O.L.	80	65	●	NO	✔
GMC4 65-80C/A	1,6	3,1	3~ 400V	1450	D.O.L.	80	65	NO	NO	✔
GMC4 75-80A/A	2,8	5,4	3~ 400V	1450	D.O.L.	80	75	NO	NO	✔
GMC4 80-100C/A	3,9	7,9	3~ 400/690V	1450	Y/Δ	100	80	●	●	✔
GMC4 80-100B/A	3,9	7,9	3~ 400/690V	1450	Y/Δ	100	80	●	●	✔
GMC4 80-100A/A	7,1	13,5	3~ 400/690V	1450	Y/Δ	100	80	●	●	✔
GMC4 90-100B/A	10	19	3~ 400/690V	1450	Y/Δ	100	90	●	●	✔
GMC4 90-100A/A	14,4	26,7	3~ 400/690V	1450	Y/Δ	100	90	●	●	✔
GMC4 100-150C/B	12,9	24,1	3~ 400/690V	1450	Y/Δ	150	100	●	●	✔
GMC4 100-150B/B	15	27,8	3~ 400/690V	1450	Y/Δ	150	100	●	●	✔
GMC4 100-150A/B	17,8	33,3	3~ 400/690V	1450	Y/Δ	150	100	●	●	✔

P_2 Rated power output I_N Rated current ● Standard ✔ ATEX Eex Version on demand

CALPEDA ROMANIA - INFINITY PUMPS SRL
Tel: 0268.33.47.47 / 0722.244.944
vanzari@calpeda.ro | www.calpeda.ro

GMC

Submersible pumps
with single channel impeller

Characteristic curves

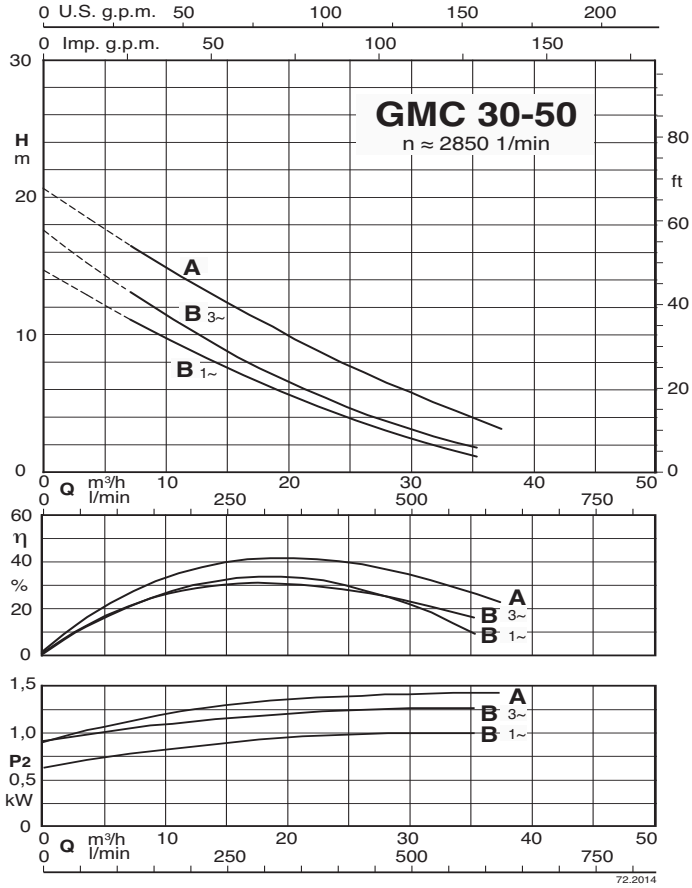

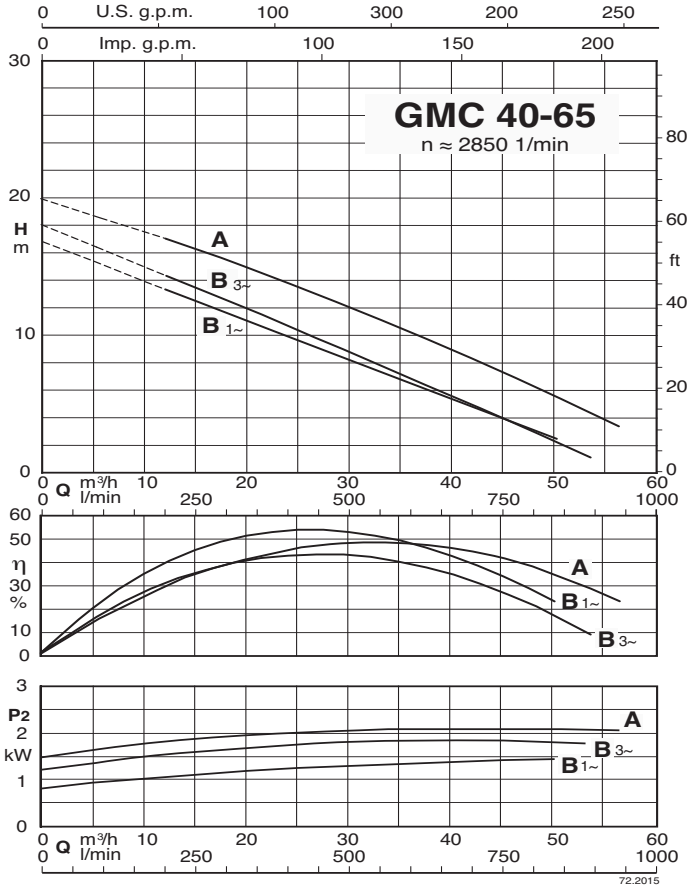

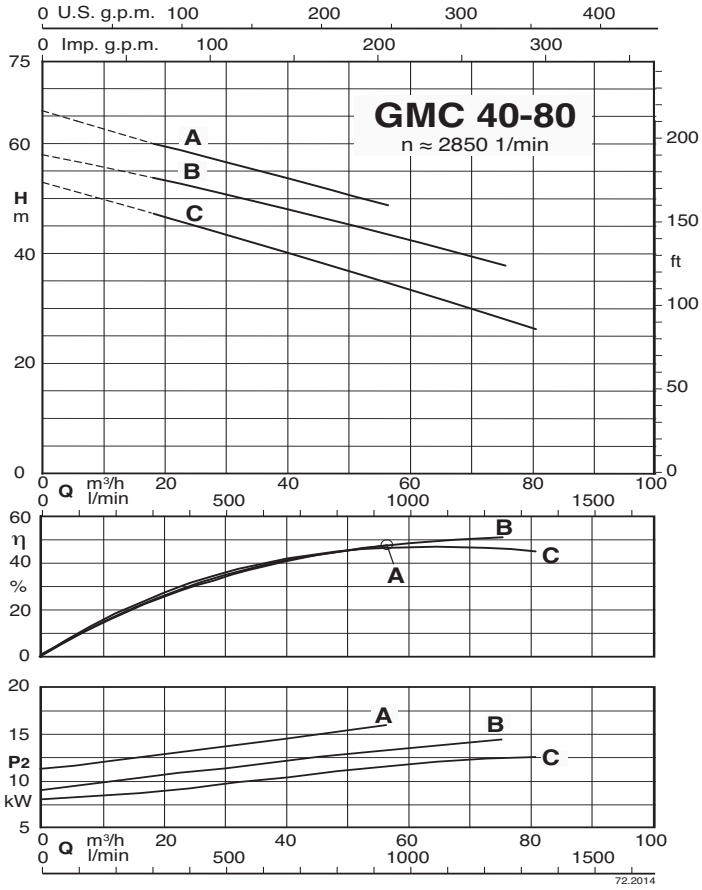

CALPEDA ROMANIA - INFINITY PUMPS SRL
Tel: 0268.33.47.47 / 0722.244.944
vanzari@calpeda.ro | www.calpeda.ro

GMC

Submersible pumps
with single channel impeller

Characteristic curves

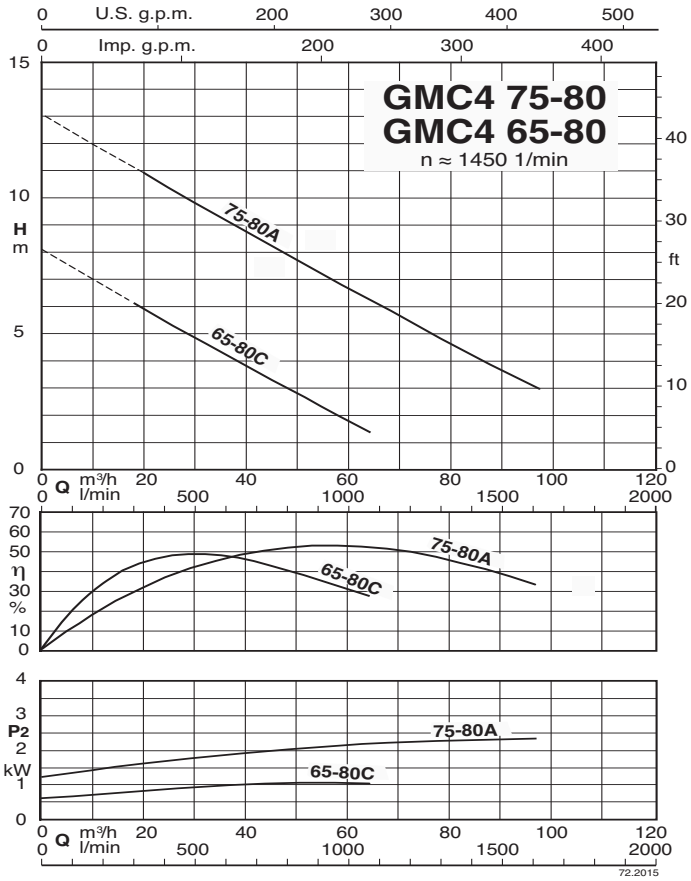

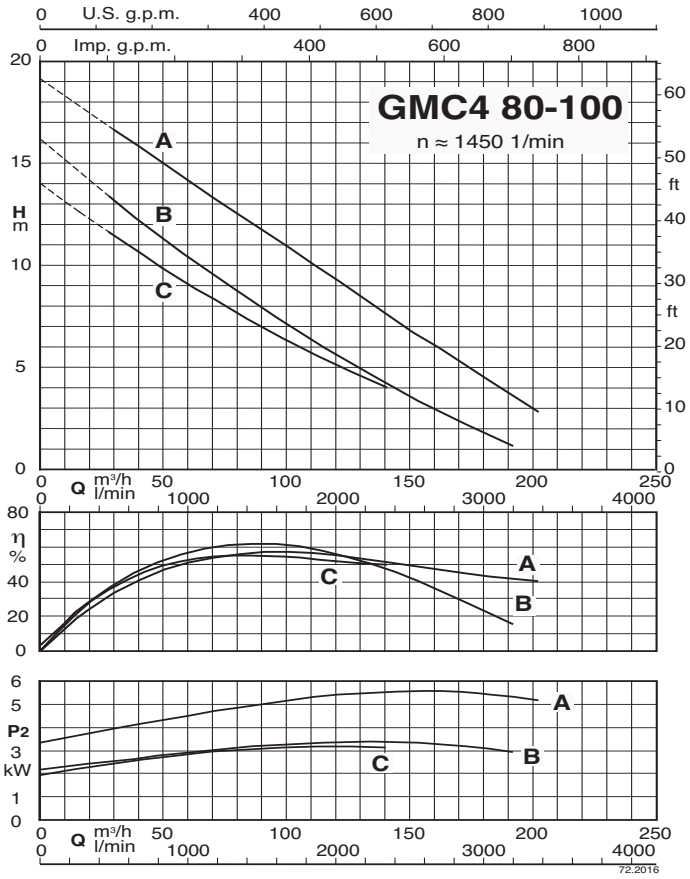

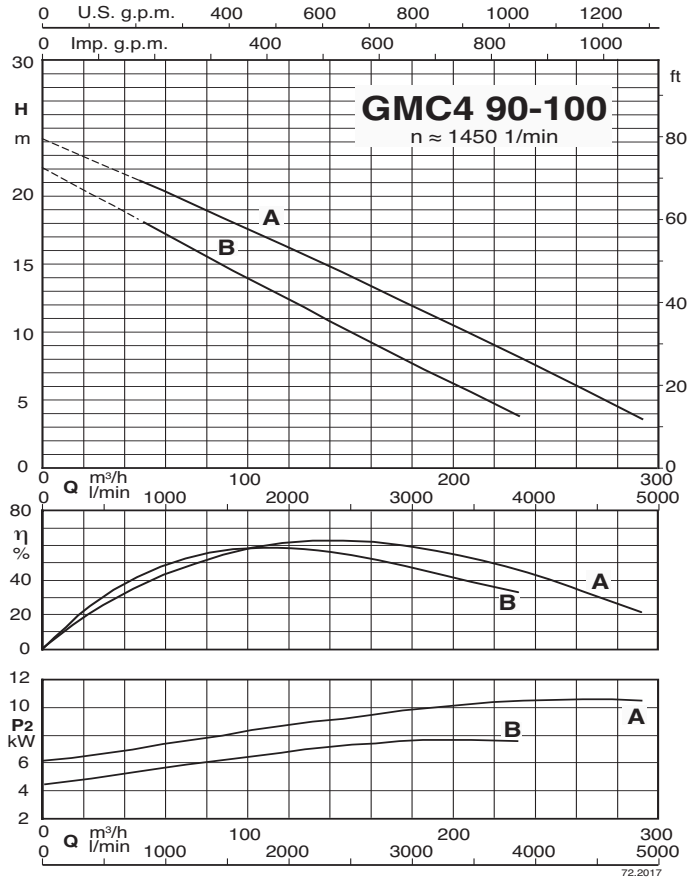

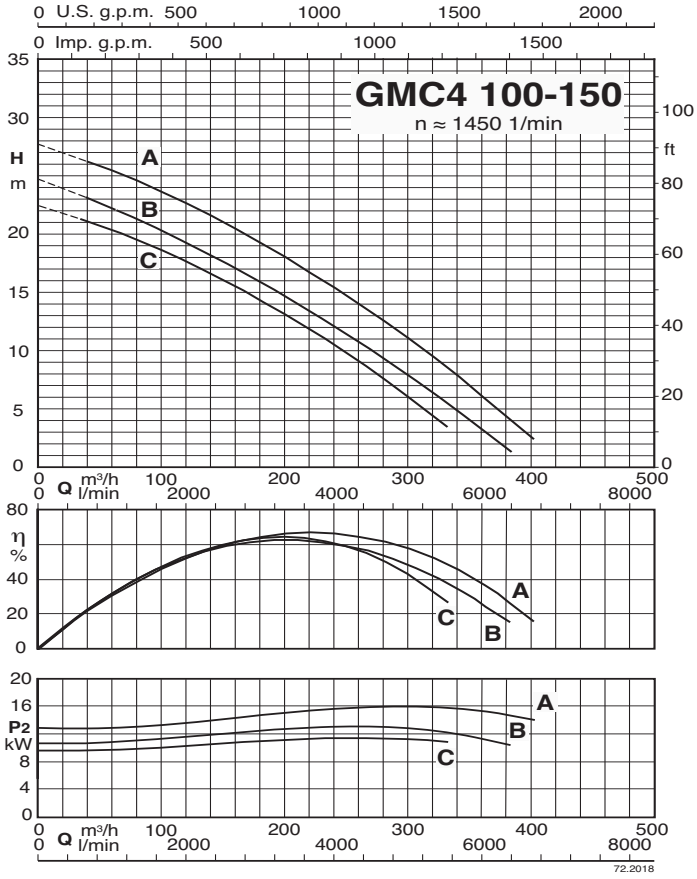

CALPEDA ROMANIA - INFINITY PUMPS SRL
Tel: 0268.33.47.47 / 0722.244.944
vanzari@calpeda.ro | www.calpeda.ro

GMC

Submersible pumps
with single channel impeller

Dimensions and weights

GMC 30-50

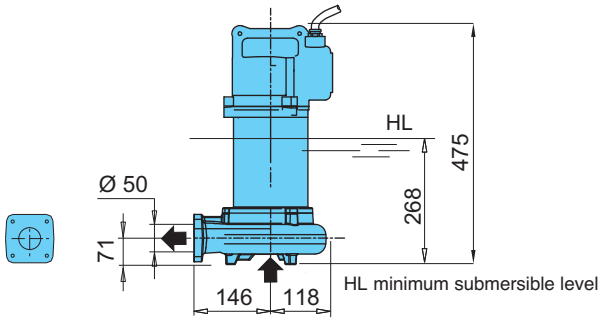

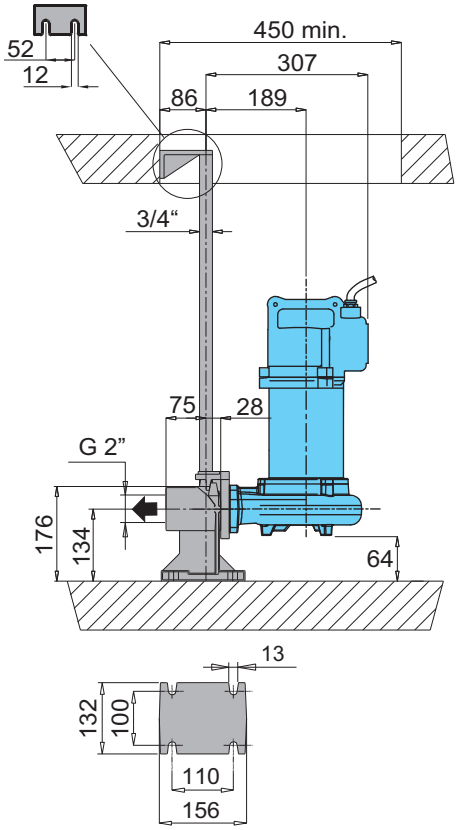

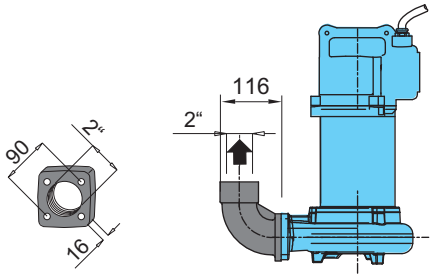

Version with threaded flange and 90° elbow

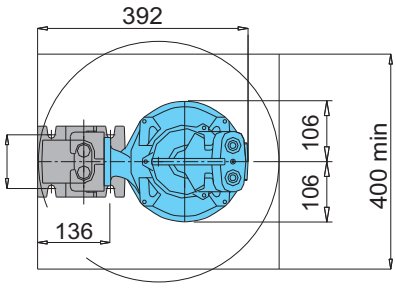

Version with duck foot coupling

TYPE	Weight kg
GMCM 30-50B	31
GMC 30-50B	
GMC 30-50A	

CALPEDA ROMANIA - INFINITY PUMPS SRL
Tel: 0268.33.47.47 / 0722.244.944
vanzari@calpeda.ro | www.calpeda.ro

GMC

Submersible pumps
with single channel impeller

Dimensions and weights

GMC 40-65

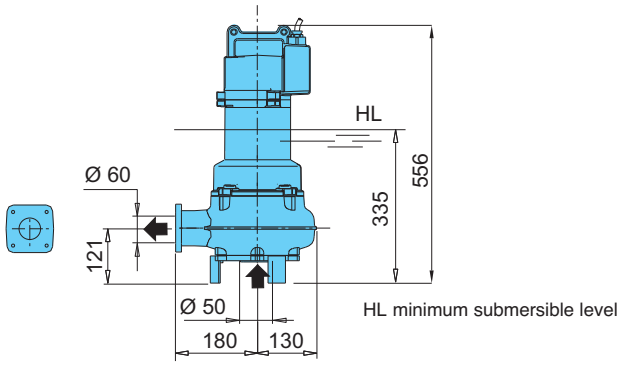

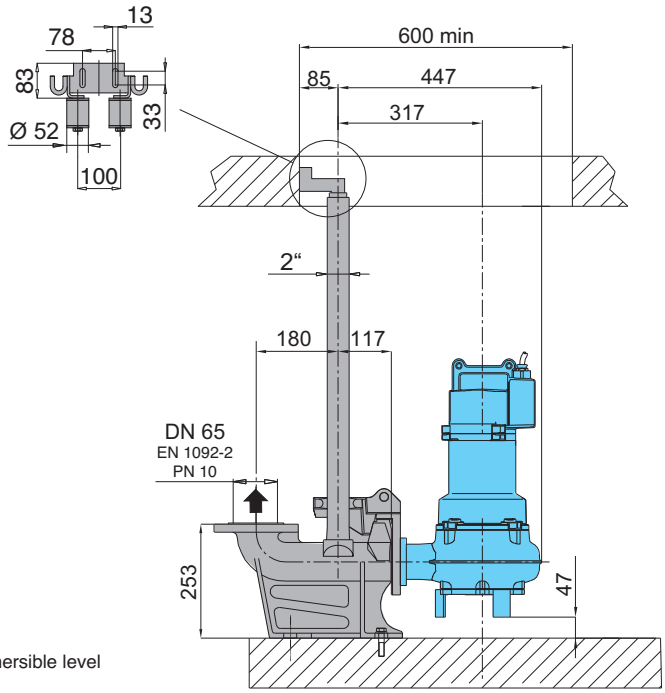

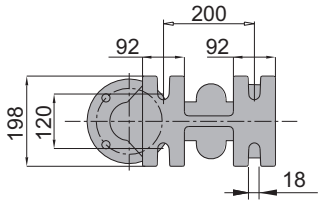

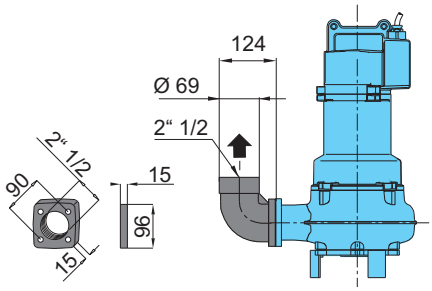

Version with threaded flange and 90° elbow

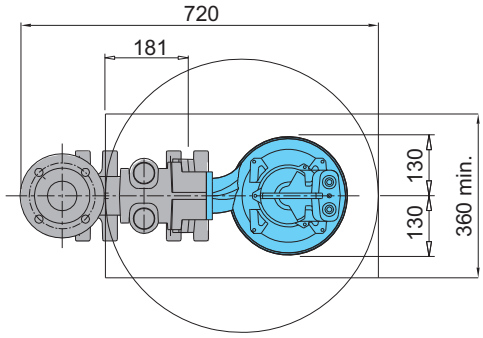

Version with duck foot coupling

TYPE	Weight kg
GMCM 40-65B	45
GMC 40-65B	
GMC 40-65A	

CALPEDA ROMANIA - INFINITY PUMPS SRL
Tel: 0268.33.47.47 / 0722.244.944
vanzari@calpeda.ro | www.calpeda.ro

GMC

Submersible pumps
with single channel impeller

Dimensions and weights

GMC 40-80
GMC4M 65-80
GMC4 65-80
GMC4 75-80

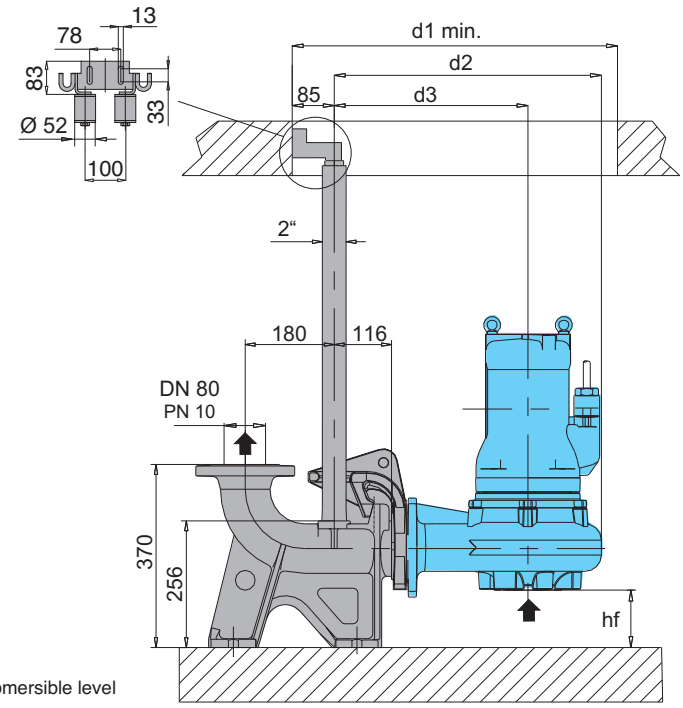

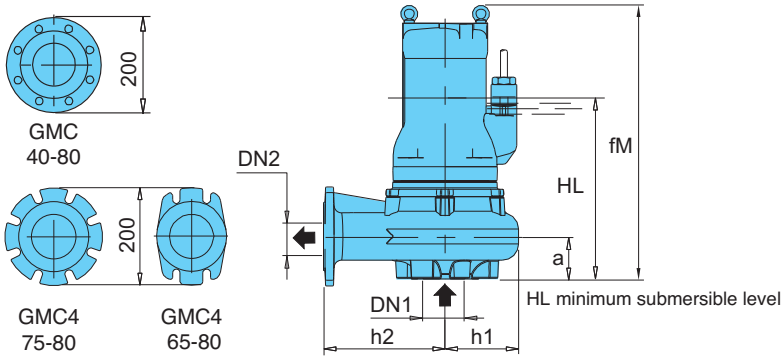

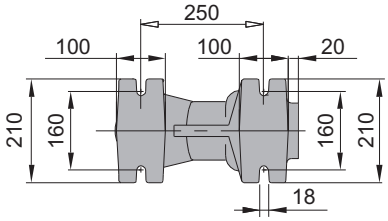

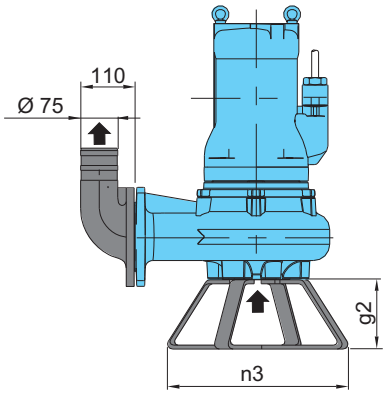

Version with foot and 90° elbow

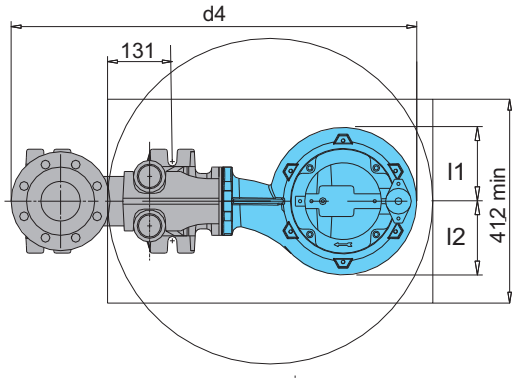

Version with duck foot coupling

TYPE	EN 1092-2 PN 10		Dimensions mm														Weight kg
	DN1	DN2	fM	HL	hf	a	l1	l2	d1	d2	d3	d4	h1	h2	n3	g2	
GMC 40-80C/A	80	80	890	523	85	116	168	168	750	603	416	883	187	250	500	150	195
GMC 40-80B/A																	
GMC 40-80A/A																	
GMC4M 65-80C/A	80	80	533	330	104	100	132	132	658	498	366	775	132	200	364	140	49
GMC4 65-80C/A																	
GMC4 75-80A/A	80	80	516	380	80	121	143	169	700	548	396	828	152	250	364	140	67

CALPEDA ROMANIA - INFINITY PUMPS SRL
Tel: 0268.33.47.47 / 0722.244.944
vanzari@calpeda.ro | www.calpeda.ro

GMC

Submersible pumps
with single channel impeller

Dimensions and weights

GMC4 80-100
GMC4 90-100

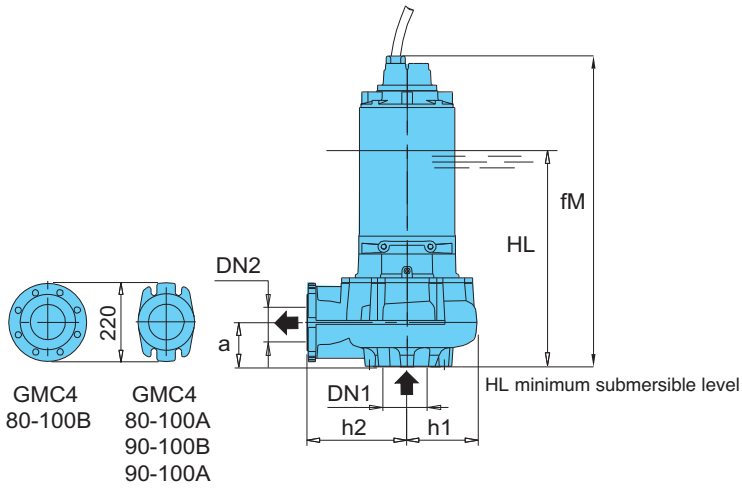

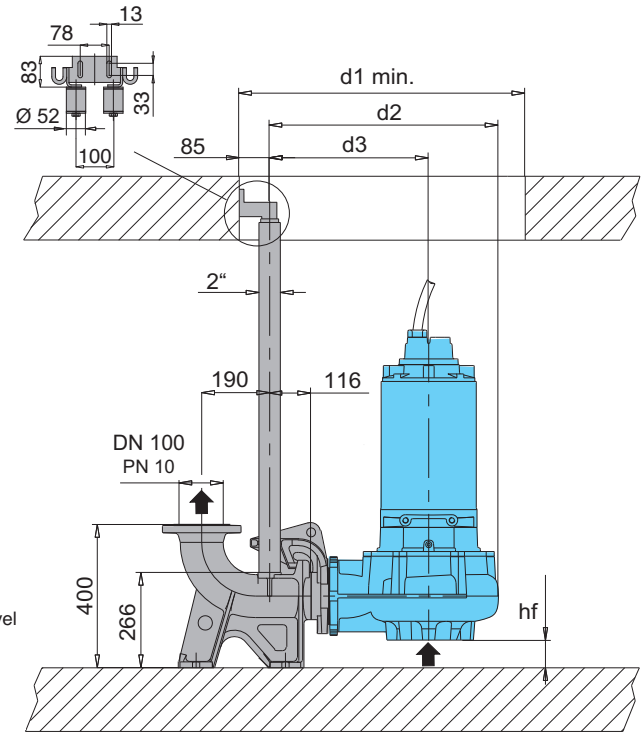

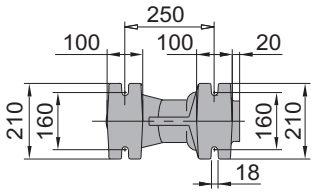

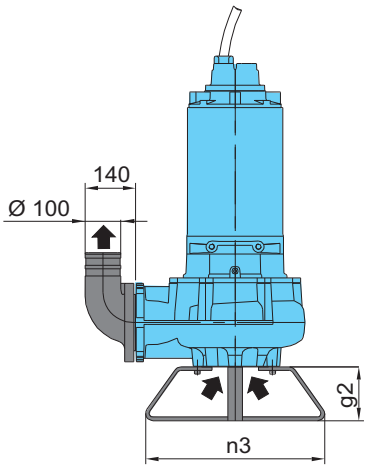

Version with foot and 90° elbow

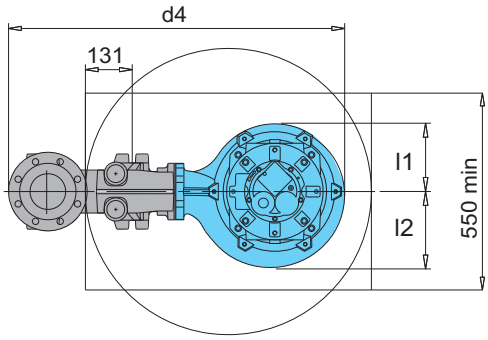

Version with duck foot coupling

TYPE	EN 1092-2 PN 10		Dimensions mm														Weight kg
	DN1	DN2	fM	HL	hf	a	l1	l2	d1	d2	d3	d4	h1	h2	n3	g2	
GMC4 80-100C/A GMC4 80-100B/A	125	100	597	420	62	138	180	231	850	673	466	973	207	300	500	150	117
GMC4 80-100A/A	125	100	852	520	54	147	189	212	800	640	445	940	195	279	500	150	170
GMC4 90-100B/A GMC4 90-100A/A	125	100	920	570	54	147	189	212	800	640	445	940	195	279	500	150	204

CALPEDA ROMANIA - INFINITY PUMPS SRL
Tel: 0268.33.47.47 / 0722.244.944
vanzari@calpeda.ro | www.calpeda.ro

GMC

Submersible pumps
with single channel impeller

Dimensions and weights

GMC4 100-150

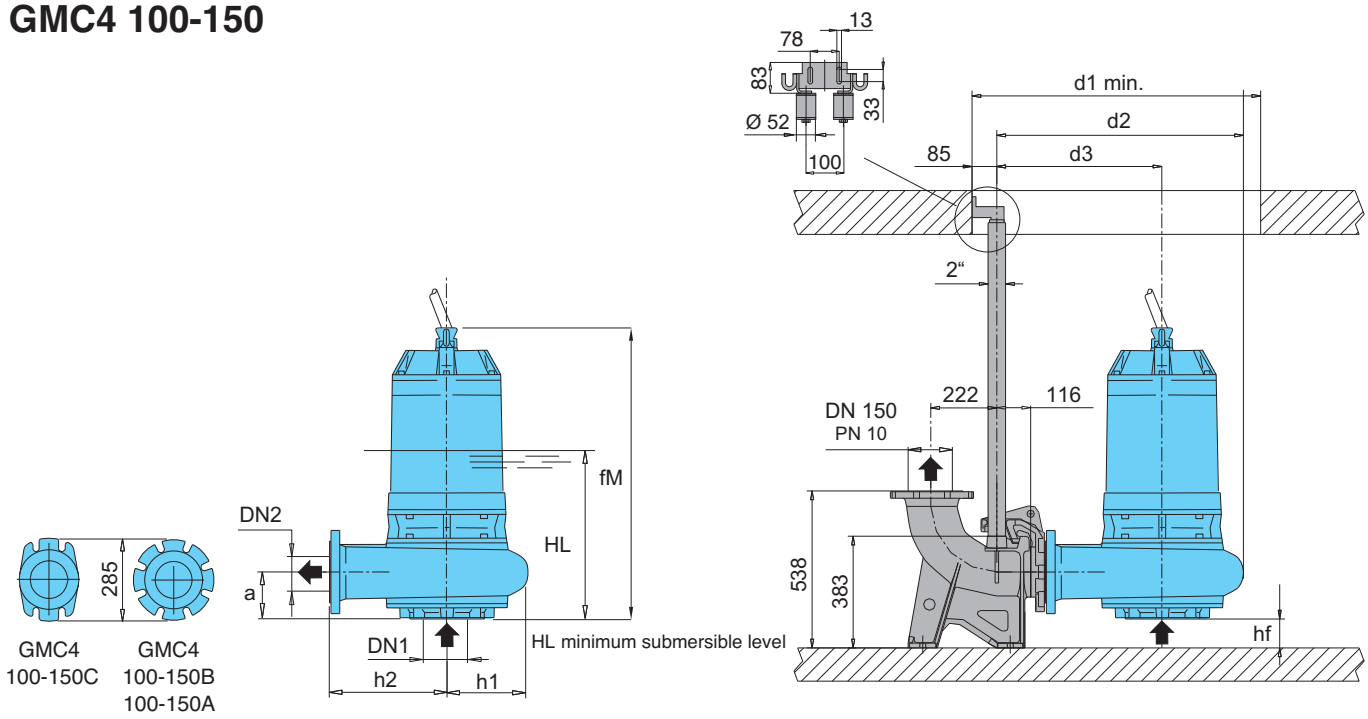

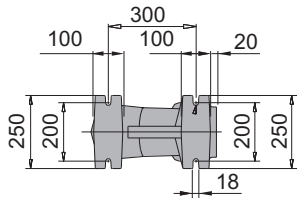

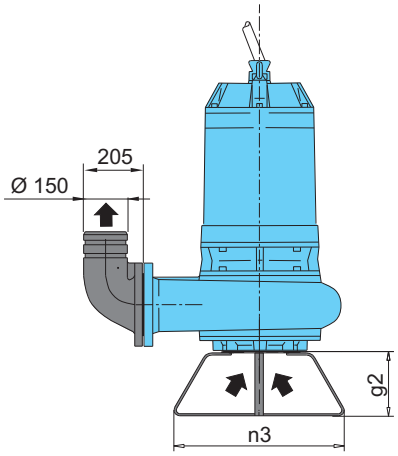

Version with foot and 90° elbow

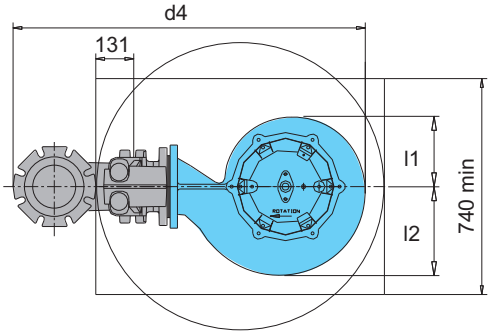

Version with duck foot coupling

TYPE	EN 1092-2 PN 10		Dimensions mm														Weight kg
	DN1	DN2	fM	HL	hf	a	l1	l2	d1	d2	d3	d4	h1	h2	n3	g2	
GMC4 100-150C/B	150	150	1013	630	80	180	239	304	990	840	566	1122	273	400	225	600	313
GMC4 100-150B/B GMC4 100-150A/B	150	150	1273	660	80	180	239	304	990	840	566	1208	273	400	225	500	375

CALPEDA ROMANIA - INFINITY PUMPS SRL
Tel: 0268.33.47.47 / 0722.244.944
vanzari@calpeda.ro | www.calpeda.ro

GMN

Submersible pumps
with channels impeller

Construction

Submersible pumps with channels impeller.
Twin mechanical seal with oil chamber.
Delivery connection DN 65-80-100-150-200-250-300.

Applications

Suitable to pump slurry, sewage and waste water (non-corrosive) with solids in suspension.
For industrial and residential installations and general drainage applications.
They are ideal for applications with smaller solids.
Solid passage from 30 to 140 mm

Operating conditions

Liquid temperature up to 40 °C.
Maximum immersion depth: 20 m (with suitable cable length).
Continuous duty (with pump immerged at minimum level).

Main materials

Pump casing: cast iron EN-GJL-250
Impeller: cast iron EN-GJL-250+Ni
Motor casing: cast iron EN-GJL-250
Motor cover: cast iron EN-GJL-250
Shaft: stainless steel AISI 420B
Mechanical seal motor side: graphite/ceramic
Mechanical seal pump side: silicon carbide/silicon carbide

Motor

2-4-6 or 8 poles induction, 50Hz
Three-phase version: 400V ± 10%,
400/690V ± 10%
Insulation class: H
Protection degree: IP 68
N° of starting x hour: max 15 with regular intervals
Cable: H07RN-F, length 10 m
Other models: contact our sale office
Classification scheme IE3.

Coverage chart

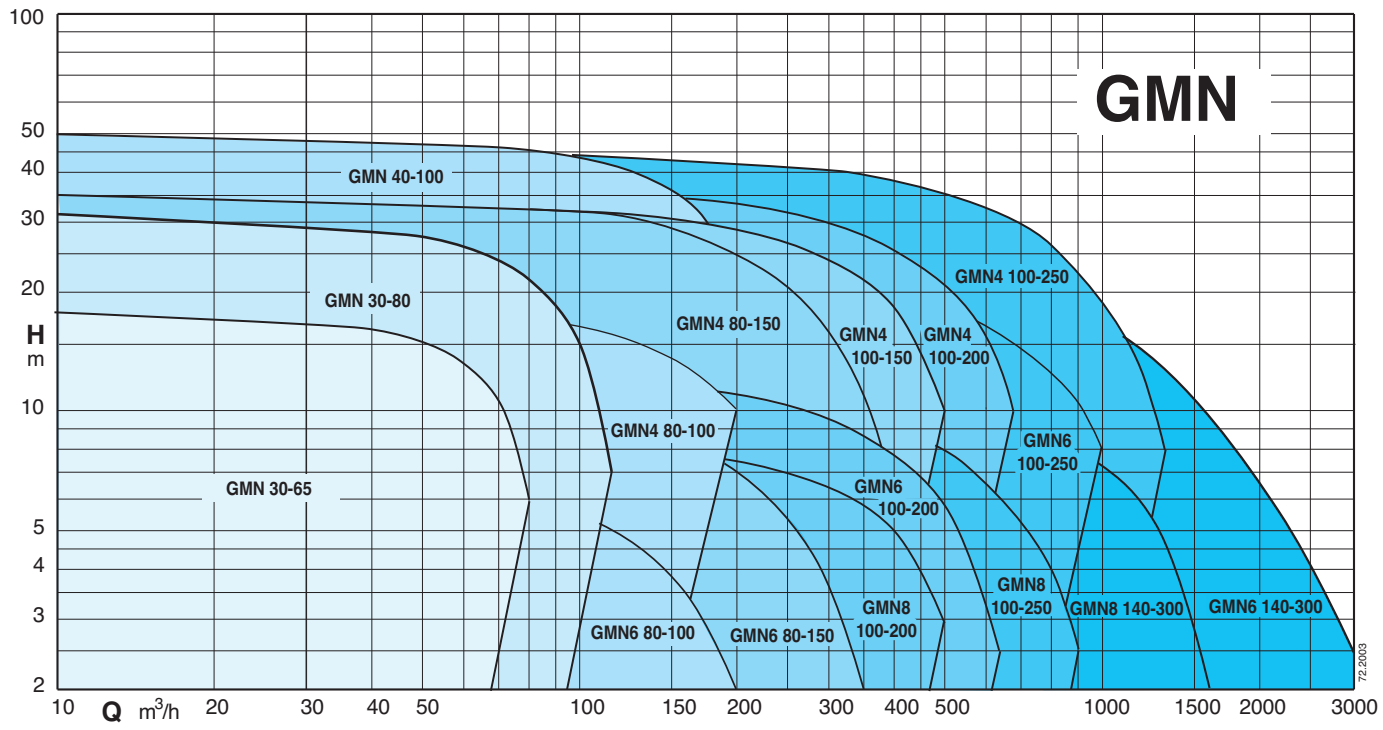

CALPEDA ROMANIA - INFINITY PUMPS SRL
Tel: 0268.33.47.47 / 0722.244.944
vanzari@calpeda.ro | www.calpeda.ro

GMN

Submersible pumps
with channels impeller

Technical data

TYPE	P_2 kW	I_N A	Power Supply	r.p.m.	Starting	DN mm	Free passage Ø mm	Thermal protector	Humidity probe	ATEX Eex
GMN 30-65B/A	3,1	5,8	3~ 400V	2850	D.O.L.	65	30	NO	NO	✔
GMN 30-65A/A	3,6	6,6	3~ 400V	2850	D.O.L.	65	30	NO	NO	✔
GMN 30-80B/A	5	9,1	3~ 400/690V	2850	Y/Δ	80	30	●	●	✔
GMN 30-80A/A	6	10,9	3~ 400/690V	2850	Y/Δ	80	30	●	●	✔
GMN 30-80S/A	7,5	13,5	3~ 400/690V	2850	Y/Δ	80	30	●	●	
GMN 40-100D/A	12	21,7	3~ 400/690V	2850	Y/Δ	100	40	●	●	✔
GMN 40-100C/A	14,9	26,8	3~ 400/690V	2850	Y/Δ	100	40	●	●	✔
GMN 40-100B/A	16,6	29,8	3~ 400/690V	2850	Y/Δ	100	40	●	●	✔
GMN 40-100S/A	20	35,8	3~ 400/690V	2850	Y/Δ	100	40	●	●	
GMN4 80-100D/A	4,6	9,3	3~ 400/690V	1450	Y/Δ	100	80	●	●	✔
GMN4 80-100C/A	7,5	14,3	3~ 400/690V	1450	Y/Δ	100	80	●	●	✔
GMN4 80-100A/A	10	19	3~ 400/690V	1450	Y/Δ	100	80	●	●	✔
GMN6 80-100B/A	2,7	5,8	3~ 400V	950	D.O.L.	100	80	NO	NO	✔
GMN6 80-100A/A	2,8	6	3~ 400/690V	950	Y/Δ	100	80	●	●	✔
GMN6 80-150B/A	6	12	3~ 400/690V	950	Y/Δ	150	80	●	●	✔
GMN6 80-150A/A	8	15,8	3~ 400/690V	950	Y/Δ	150	80	●	●	✔
GMN6 100-150B/B	14	26,2	3~ 400/690V	950	Y/Δ	150	100	●	●	
GMN6 100-150A/B	12	22,9	3~ 400/690V	950	Y/Δ	150	100	●	●	
GMN4 80-150C/B	27	49,6	3~ 400/690V	1450	Y/Δ	150	80	●	●	
GMN4 80-150B/B	30	54,3	3~ 400/690V	1450	Y/Δ	150	80	●	●	
GMN4 100-150G/A	23	42,2	3~ 400/690V	1450	Y/Δ	150	100	●	●	
GMN4 100-150F/A	27	49,6	3~ 400/690V	1450	Y/Δ	150	100	●	●	
GMN4 100-150E/B	30	54,3	3~ 400/690V	1450	Y/Δ	150	100	●	●	
GMN4 100-150D/B	30	54,3	3~ 400/690V	1450	Y/Δ	150	100	●	●	
GMN4 100-150S/B	35,7	63,6	3~ 400/690V	1450	Y/Δ	150	100	●	●	
GMN4 100-200C/A	40	71,3	3~ 400/690V	1450	Y/Δ	200	100	●	●	
GMN4 100-200B/A	44	78,1	3~ 400/690V	1450	Y/Δ	200	100	●	●	
GMN4 100-200A/A	48	85,2	3~ 400/690V	1450	Y/Δ	200	100	●	●	
GMN4 100-250D/A	65	109,7	3~ 400/690V	1450	Y/Δ	250	100	●	●	
GMN4 100-250C/A	75	126,3	3~ 400/690V	1450	Y/Δ	250	100	●	●	
GMN4 100-250B/A	75	126,3	3~ 400/690V	1450	Y/Δ	250	100	●	●	
GMN4 100-250A/A	85	143,2	3~ 400/690V	1450	Y/Δ	250	100	●	●	
GMN6 100-200E/B	14	26,2	3~ 400/690V	950	Y/Δ	200	100	●	●	
GMN6 100-200D/B	14	26,2	3~ 400/690V	950	Y/Δ	200	100	●	●	
GMN6 100-250D/A	23	40,6	3~ 400/690V	950	Y/Δ	250	100	●	●	
GMN6 100-250C/A	29	52,8	3~ 400/690V	950	Y/Δ	250	100	●	●	
GMN6 100-250B/A	39,2	71	3~ 400/690V	950	Y/Δ	250	100	●	●	
GMN6 100-250A/A	39,2	71	3~ 400/690V	950	Y/Δ	250	100	●	●	
GMN6 140-300D/A	33,4	60,8	3~ 400/690V	950	Y/Δ	300	140	●	●	
GMN6 140-300C/A	39,2	71	3~ 400/690V	950	Y/Δ	300	140	●	●	
GMN6 140-300B/A	55,8	99	3~ 400/690V	950	Y/Δ	300	140	●	●	
GMN6 140-300A/A	65	115,3	3~ 400/690V	950	Y/Δ	300	140	●	●	
GMN8 100-200B/C	9,3	19,8	3~ 400/690V	750	Y/Δ	200	100	●	●	
GMN8 100-200A/A	9,3	19,8	3~ 400/690V	750	Y/Δ	200	100	●	●	
GMN8 100-250B/B	12,4	26,5	3~ 400/690V	750	Y/Δ	250	100	●	●	
GMN8 100-250A/C	19	39	3~ 400/690V	750	Y/Δ	250	100	●	●	
GMN8 140-300A/A	26,7	53,5	3~ 400/690V	750	Y/Δ	300	140	●	●	

P_2 Rated power output I_N Rated current ● Standard ✔ ATEX Eex Version on demand

CALPEDA ROMANIA - INFINITY PUMPS SRL
Tel: 0268.33.47.47 / 0722.244.944
vanzari@calpeda.ro | www.calpeda.ro

GMN

Submersible pumps
with channels impeller

Characteristic curves

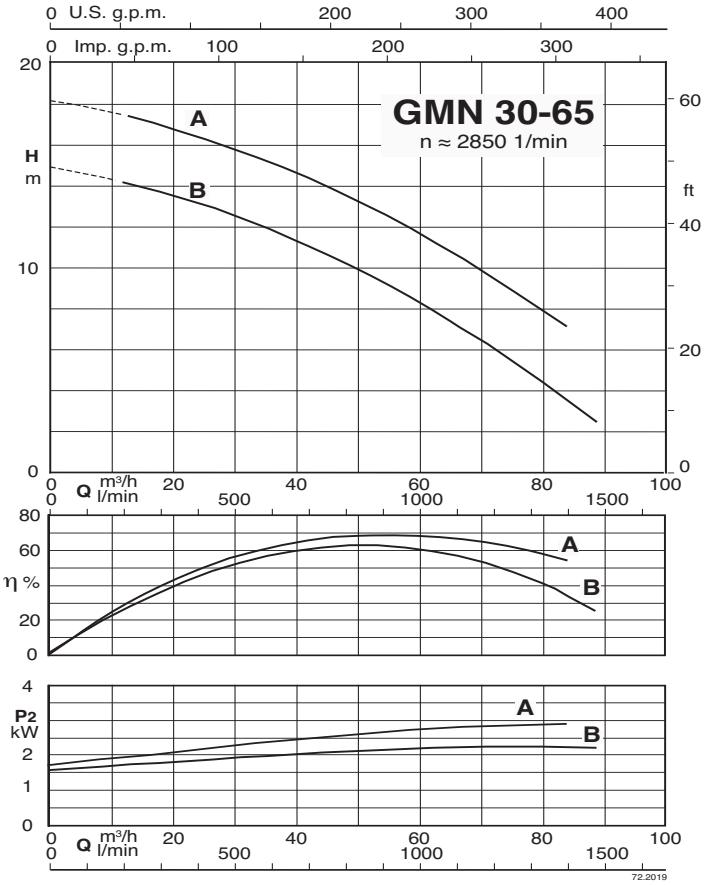

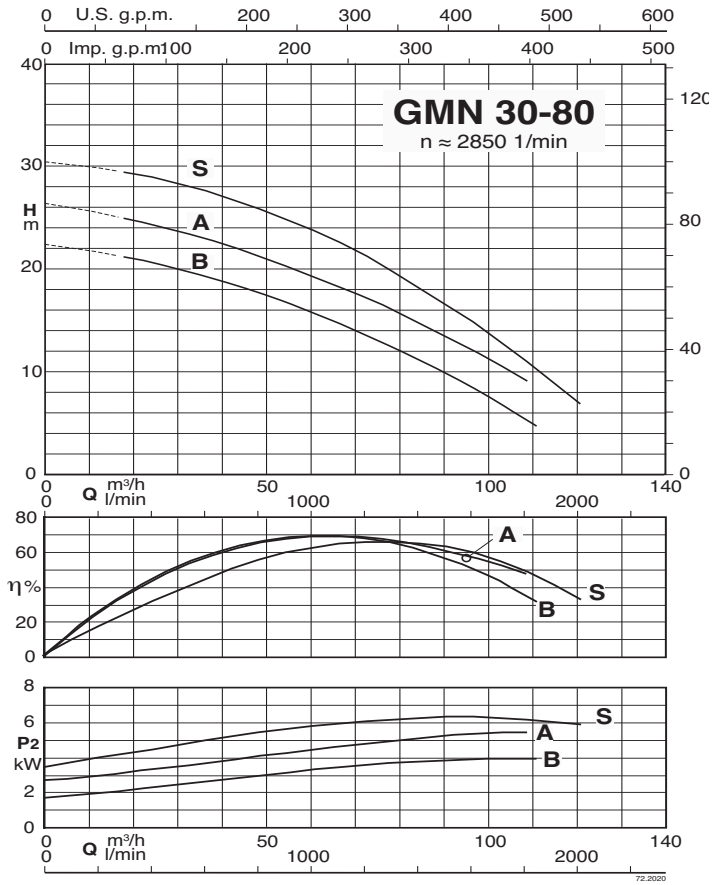

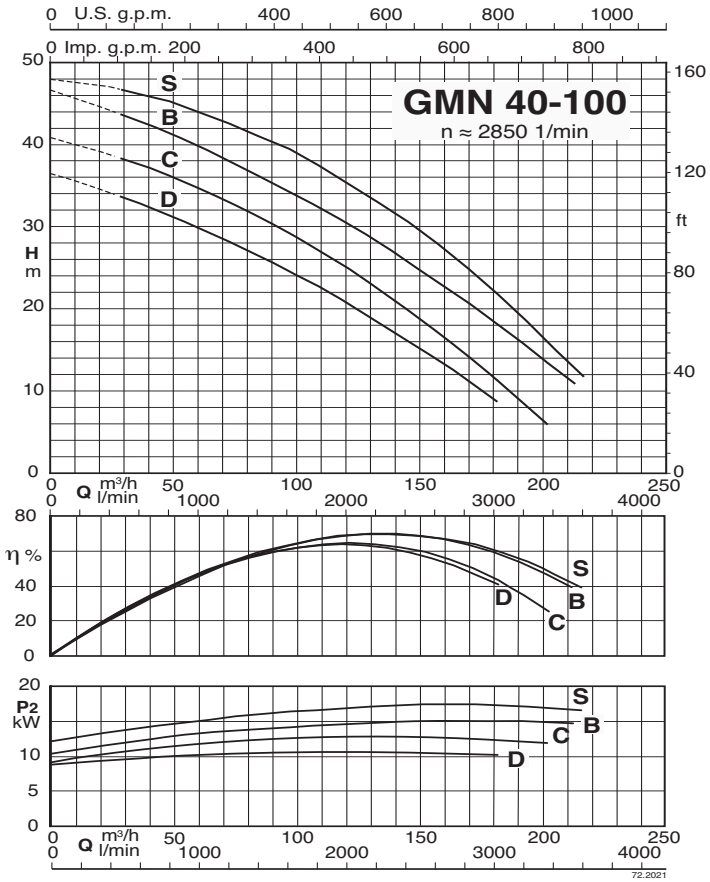

CALPEDA ROMANIA - INFINITY PUMPS SRL
Tel: 0268.33.47.47 / 0722.244.944
vanzari@calpeda.ro | www.calpeda.ro

GMN

Submersible pumps
with channels impeller

Characteristic curves

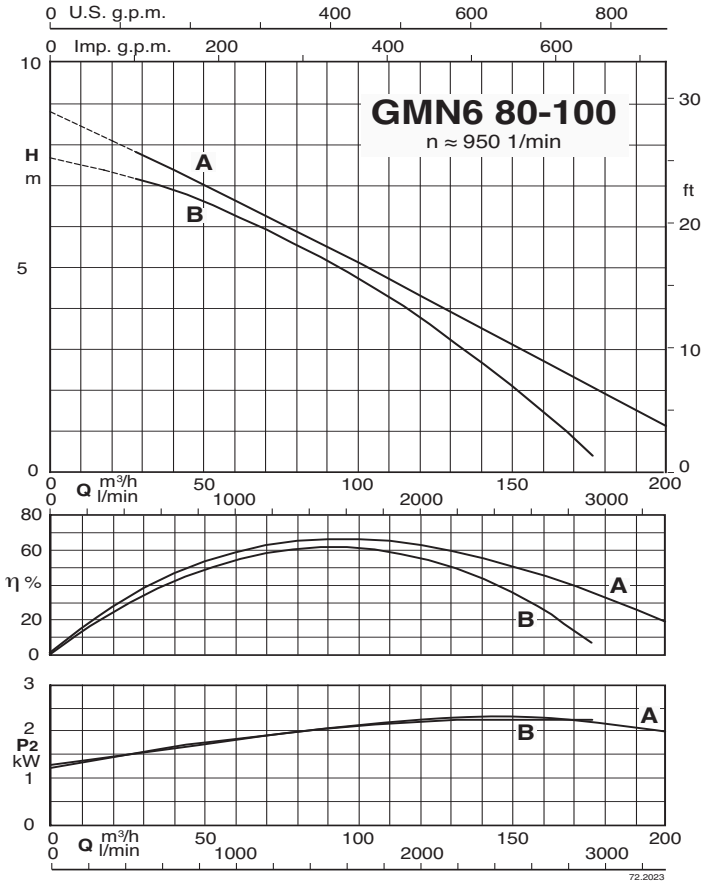

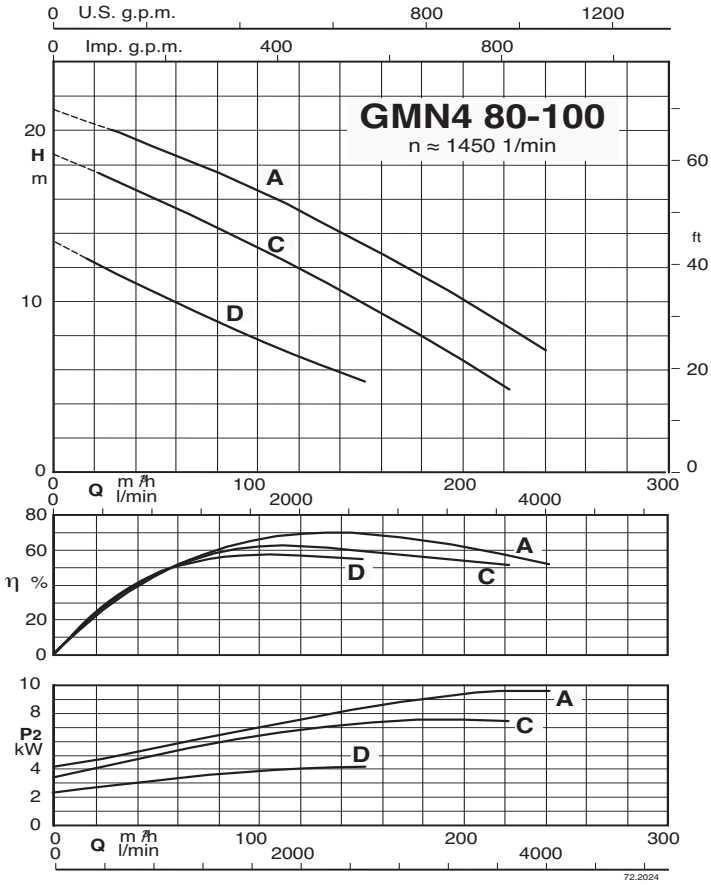

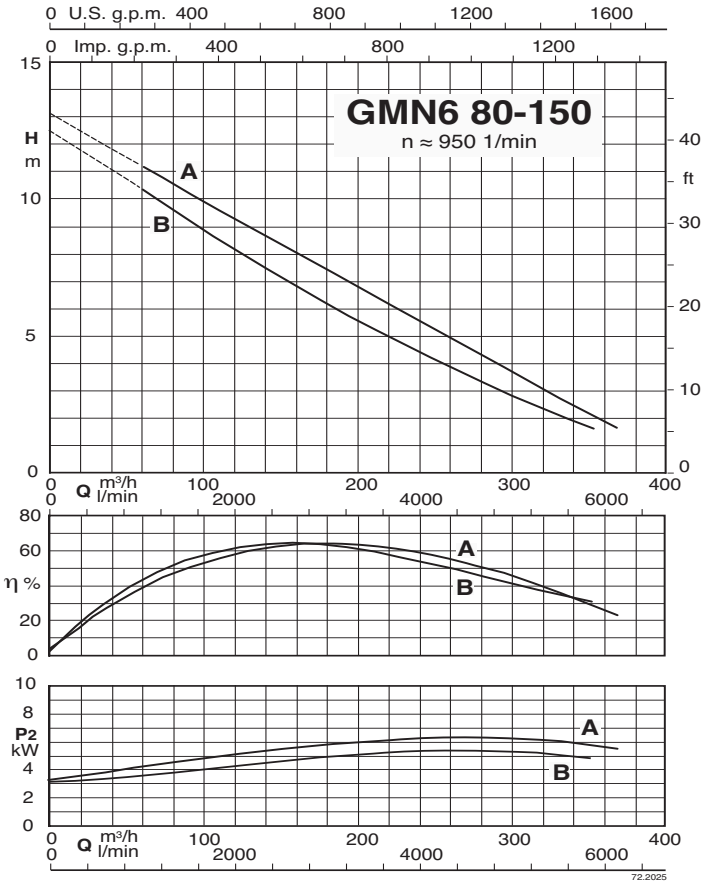

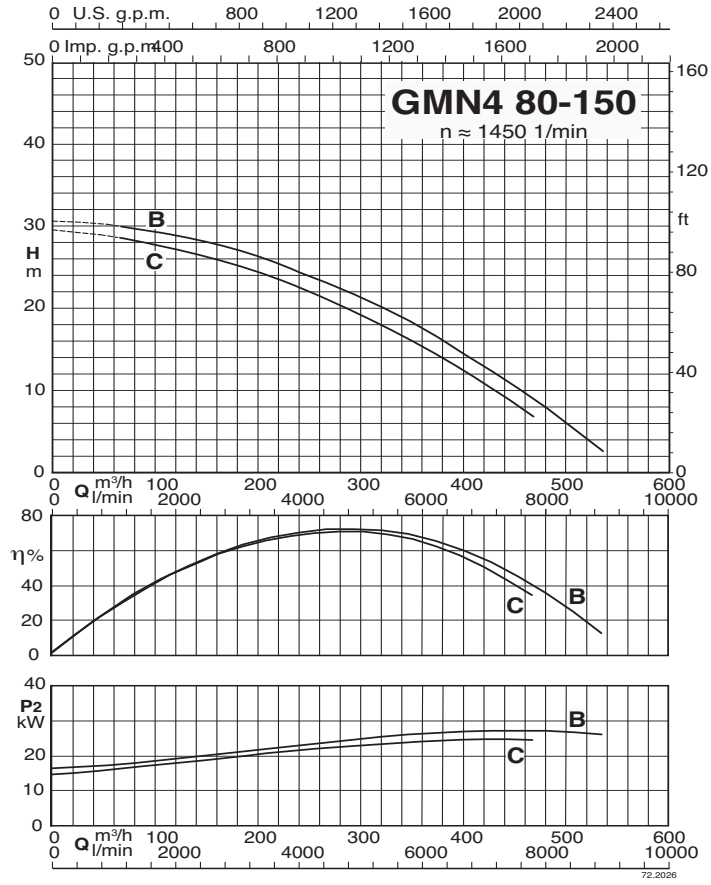

CALPEDA ROMANIA - INFINITY PUMPS SRL
Tel: 0268.33.47.47 / 0722.244.944
vanzari@calpeda.ro | www.calpeda.ro

GMN

Submersible pumps
with channels impeller

Characteristic curves

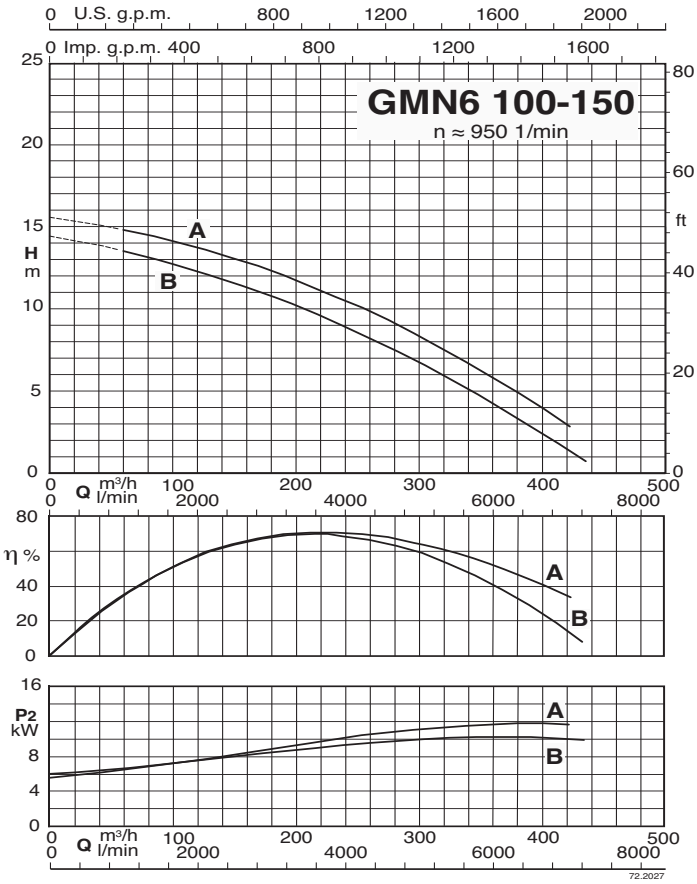

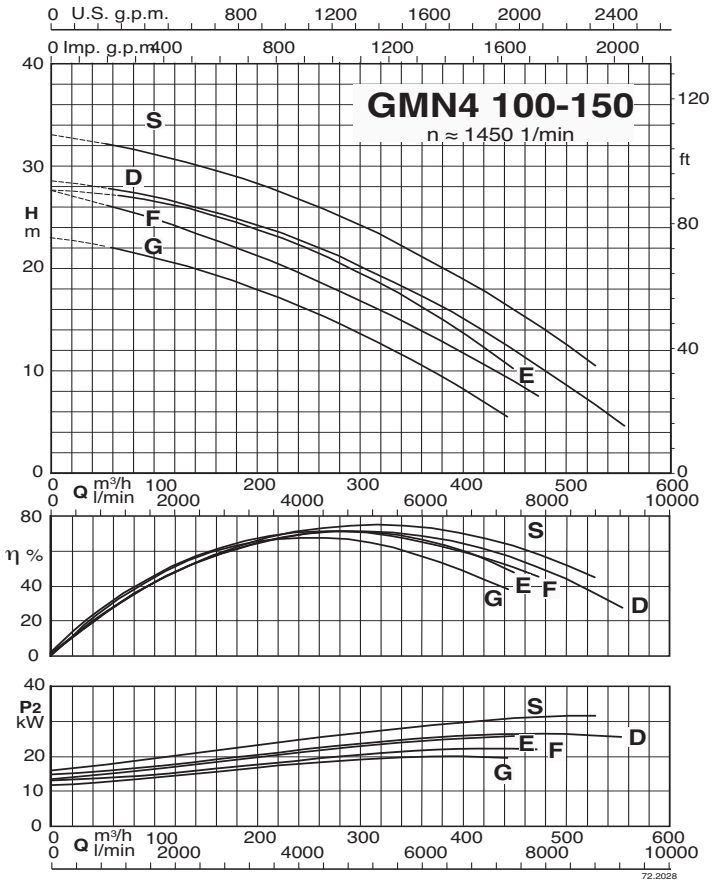

CALPEDA ROMANIA - INFINITY PUMPS SRL
Tel: 0268.33.47.47 / 0722.244.944
vanzari@calpeda.ro | www.calpeda.ro

GMN

Submersible pumps
with channels impeller

Characteristic curves

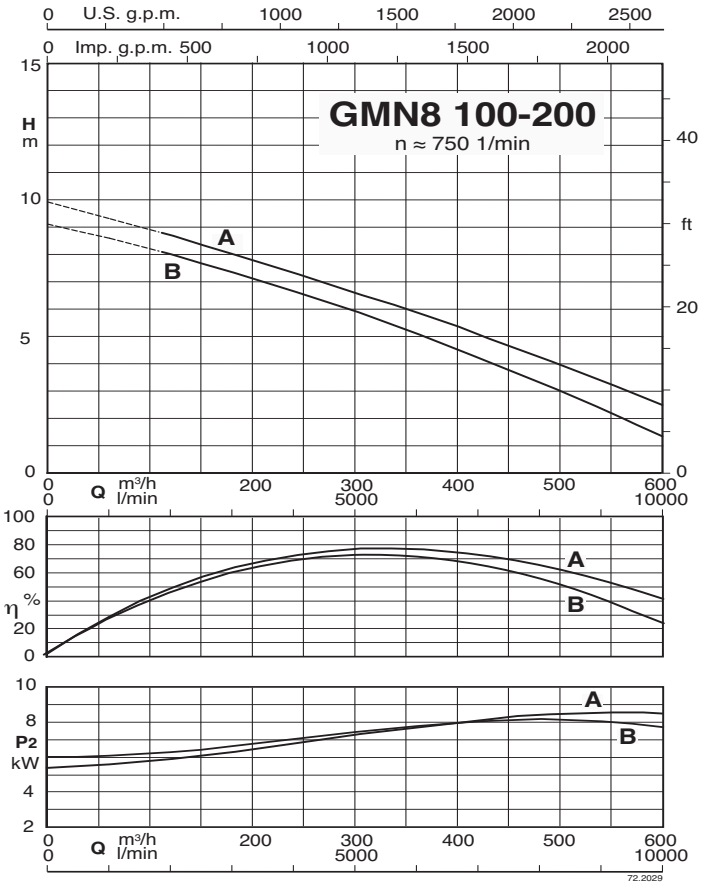

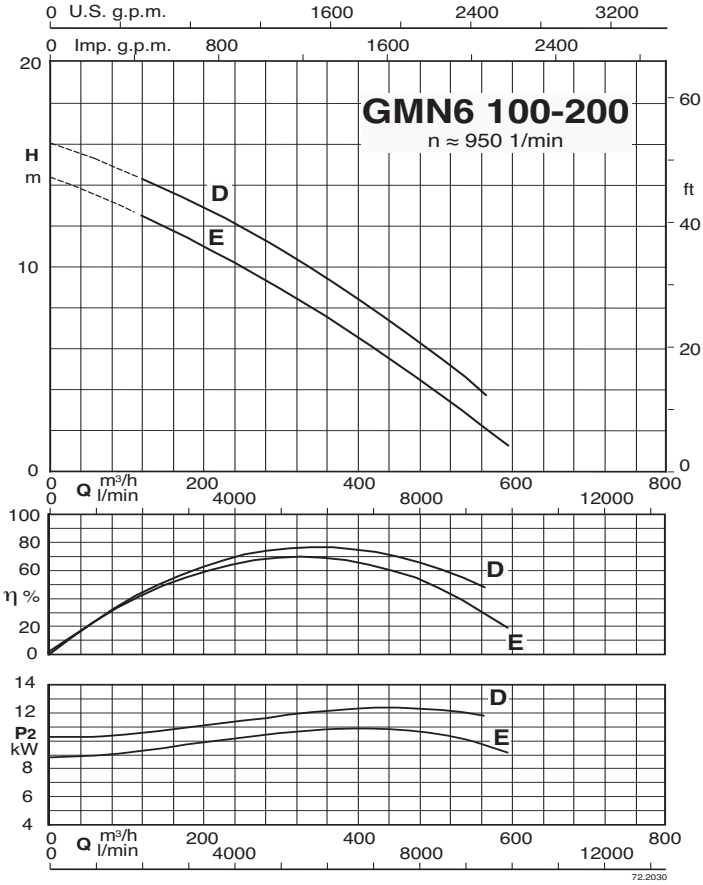

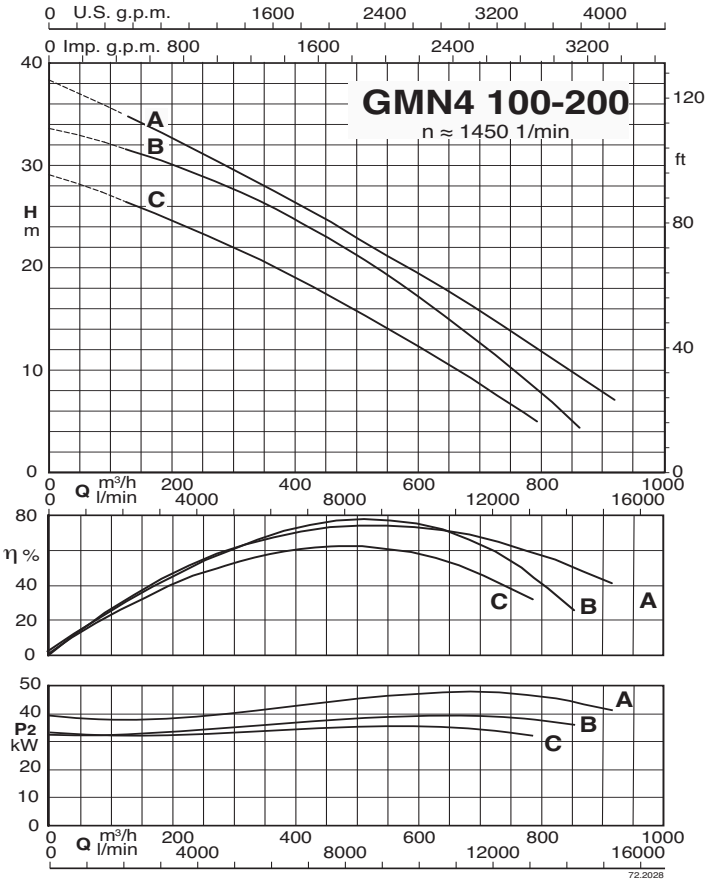

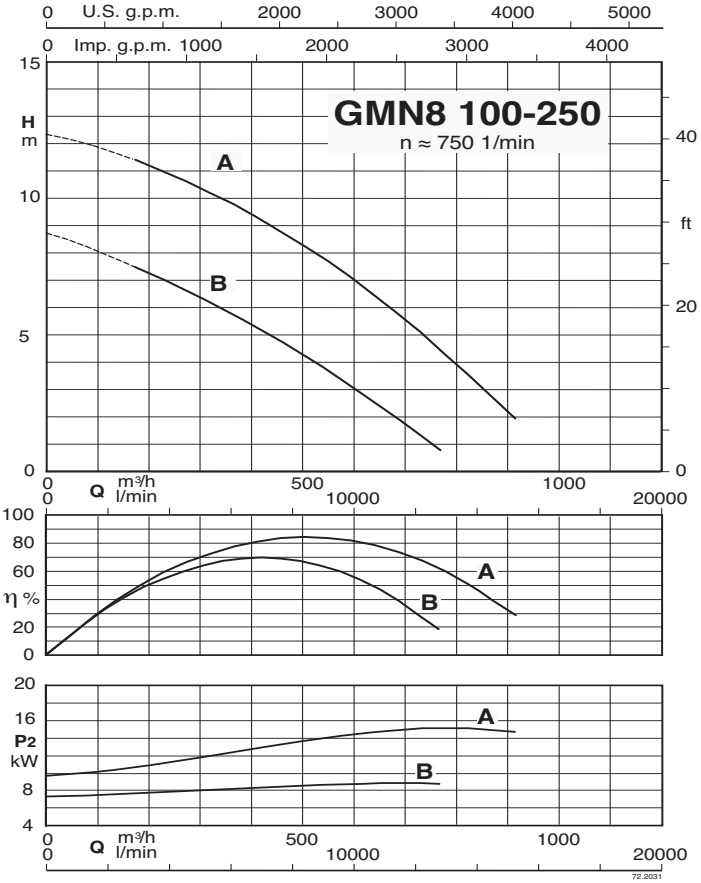

CALPEDA ROMANIA - INFINITY PUMPS SRL
Tel: 0268.33.47.47 / 0722.244.944
vanzari@calpeda.ro | www.calpeda.ro

GMN

Submersible pumps
with channels impeller

Characteristic curves

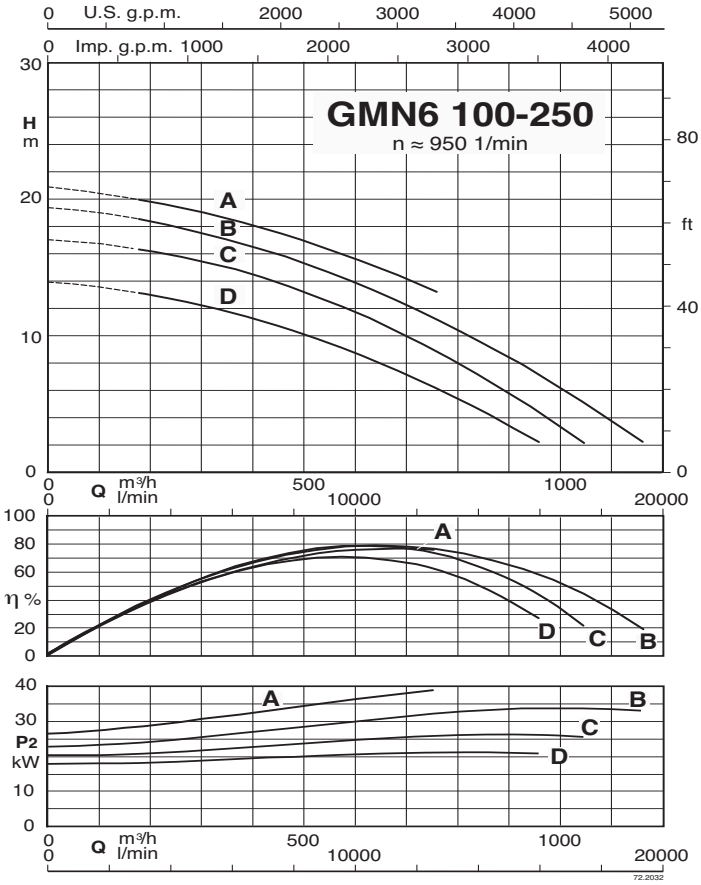

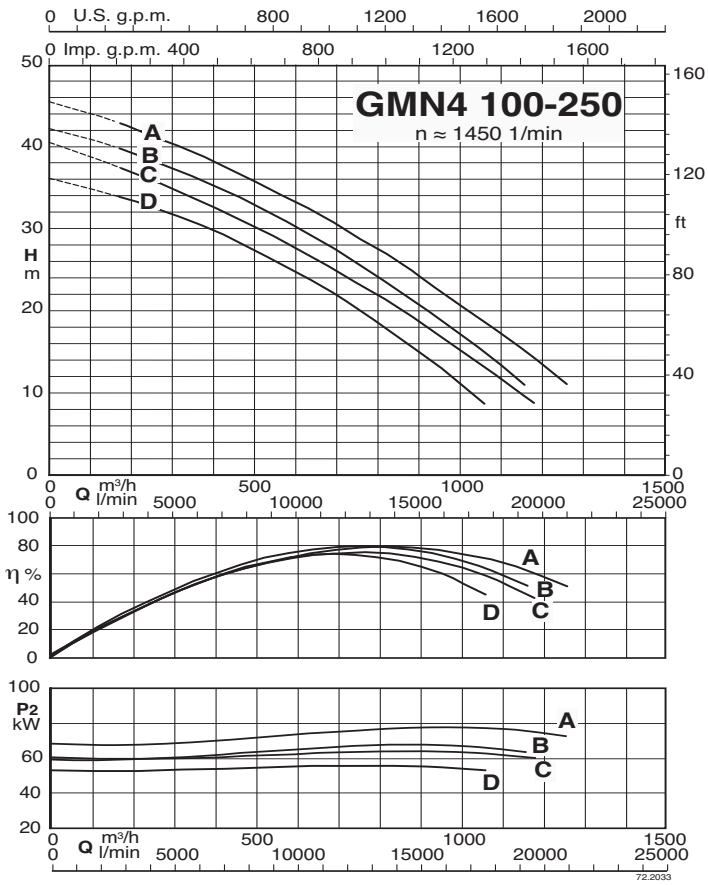

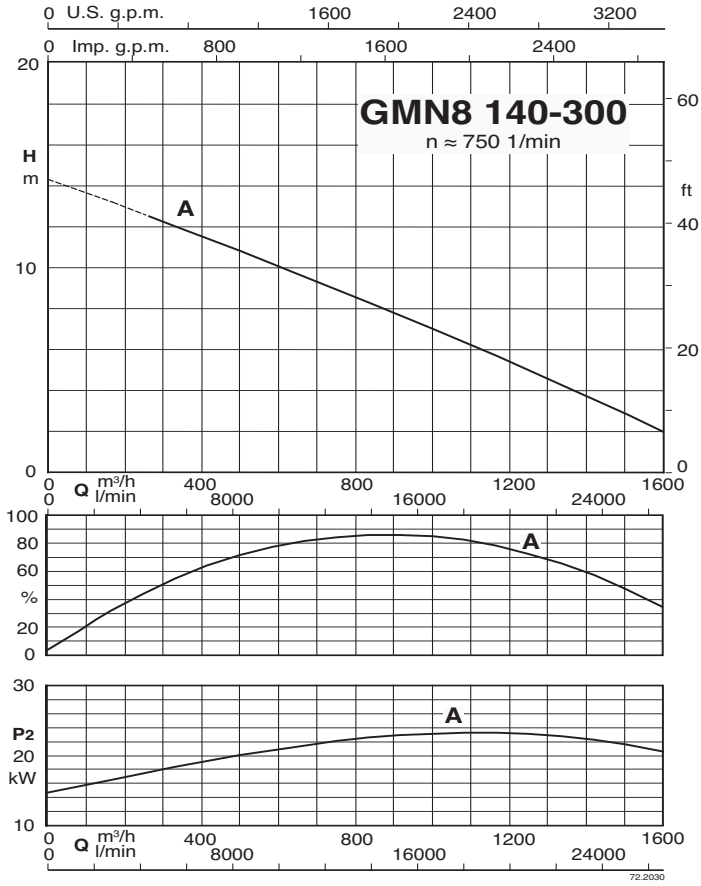

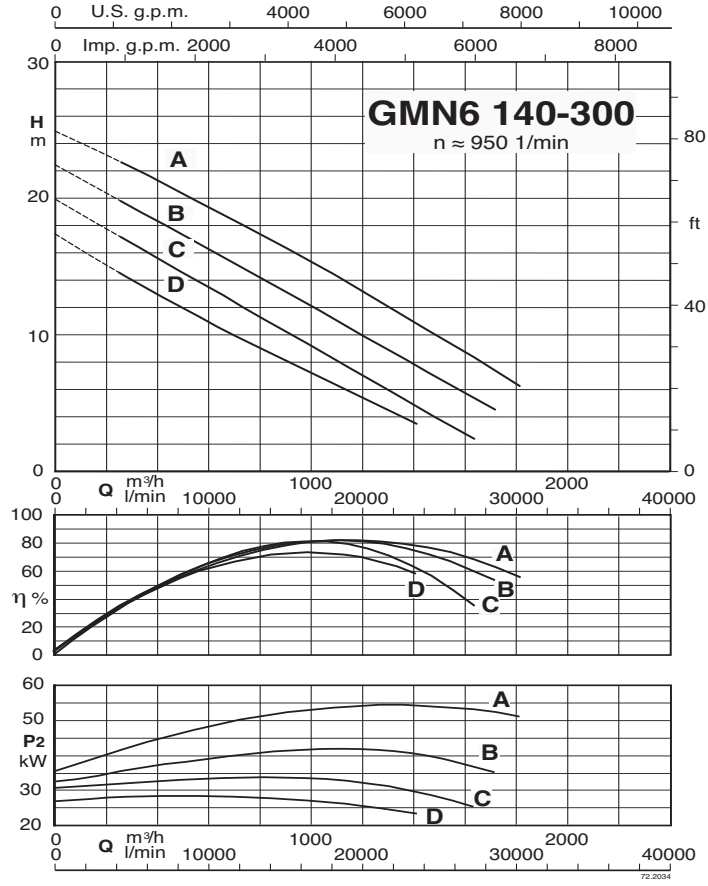

CALPEDA ROMANIA - INFINITY PUMPS SRL
Tel: 0268.33.47.47 / 0722.244.944
vanzari@calpeda.ro | www.calpeda.ro

GMN

Submersible pumps
with channels impeller

Dimensions and weights

GMN 30-65

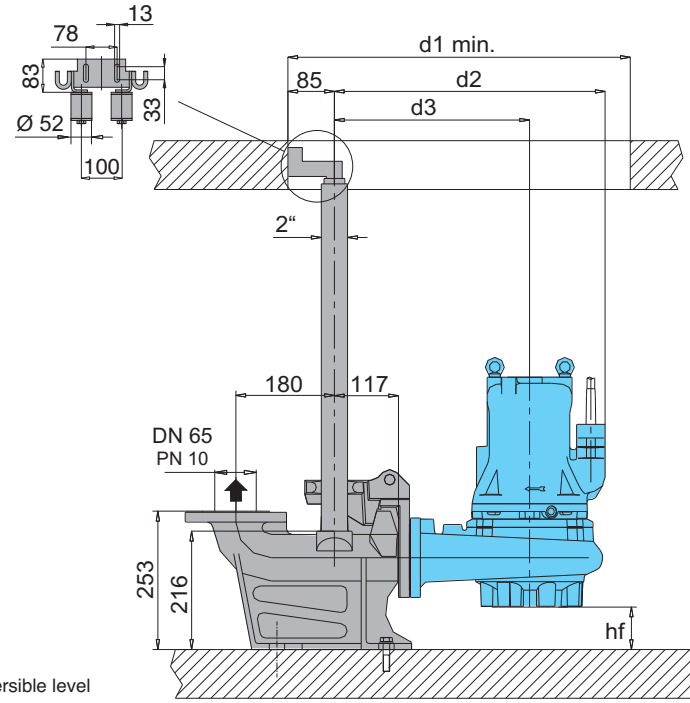

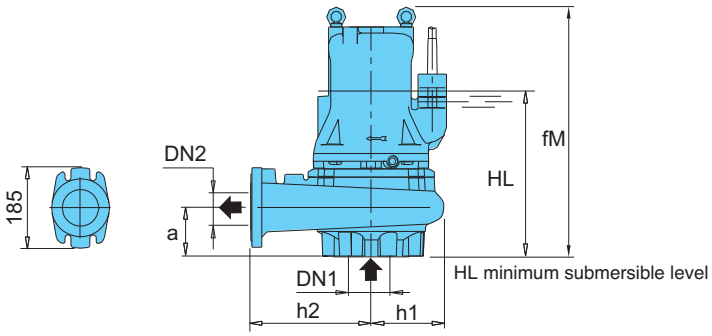

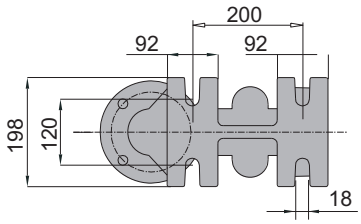

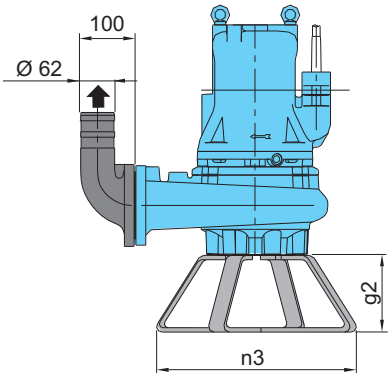

Version with foot and 90° elbow

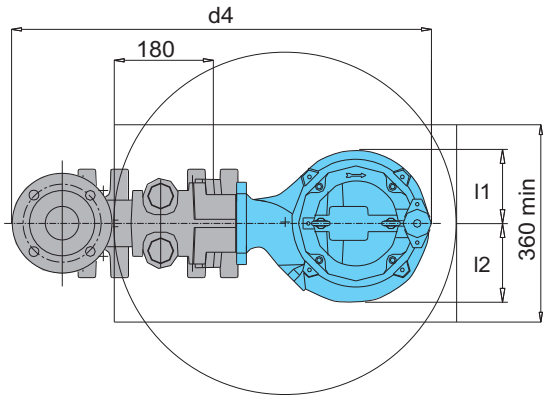

Version with duck foot coupling

TYPE	EN 1092-2 PN 10		Dimensions mm														Weight kg
	DN1	DN2	fM	HL	hf	a	l1	l2	d1	d2	d3	d4	h1	h2	n3	g2	
GMN 30-65B/A GMN 30-65A/A	80	65	456	300	78	90	133	145	625	495	357	767	138	220	364	140	62

CALPEDA ROMANIA - INFINITY PUMPS SRL
Tel: 0268.33.47.47 / 0722.244.944
vanzari@calpeda.ro | www.calpeda.ro

GMN

Submersible pumps
with channels impeller

Dimensions and weights

GMN 30-80

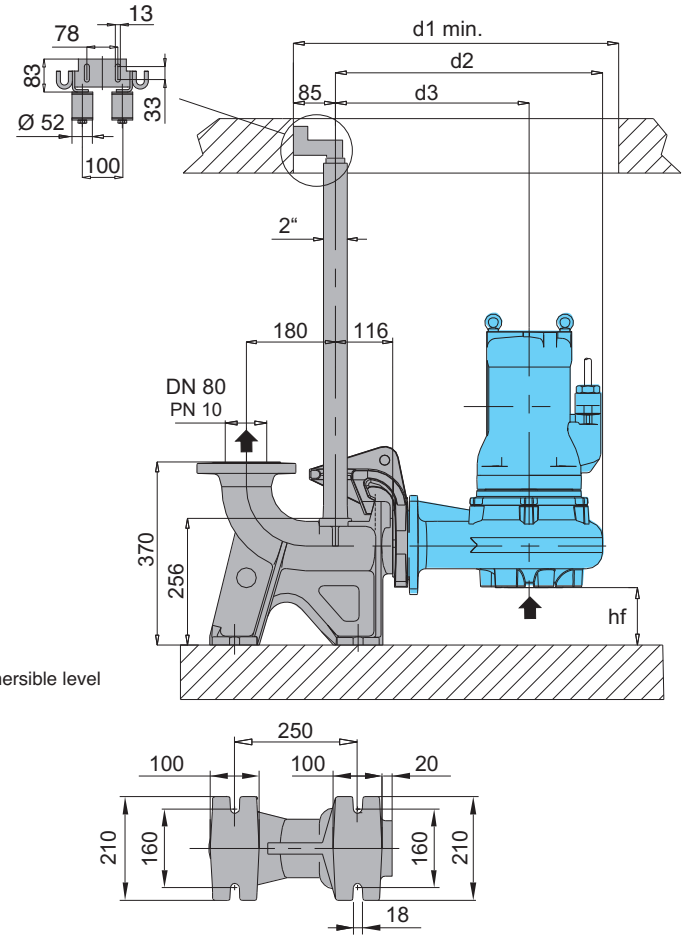

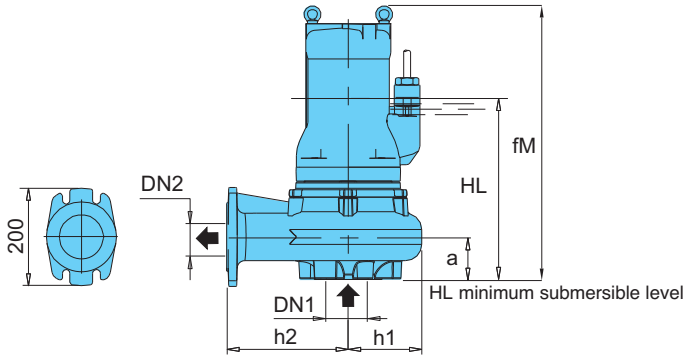

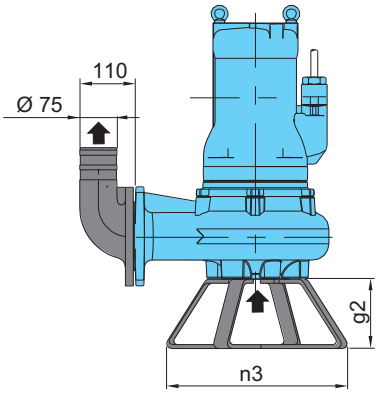

Version with foot and 90° elbow

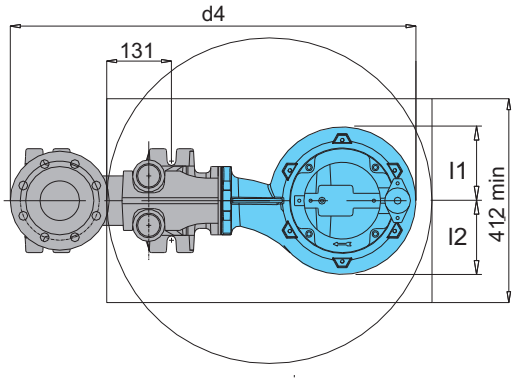

Version with duck foot coupling

TYPE	EN 1092-2 PN 10		Dimensions mm														Weight kg
	DN1	DN2	fM	HL	hf	a	l1	l2	d1	d2	d3	d4	h1	h2	n3	g2	
GMN 30-80B/A	80	80	515	330	110	90	133	145	700	511	366	791	145	220	370	140	75
GMN 30-80A/A																	
GMN 30-80S/A	100	80	767	438	132	68	165	165	700	571	386	851	185	220	500	150	150

CALPEDA ROMANIA - INFINITY PUMPS SRL
Tel: 0268.33.47.47 / 0722.244.944
vanzari@calpeda.ro | www.calpeda.ro

GMN

Submersible pumps
with channels impeller

Dimensions and weights

GMN 40-100
GMN 50-100
GMN4 80-100
GMN6 80-100

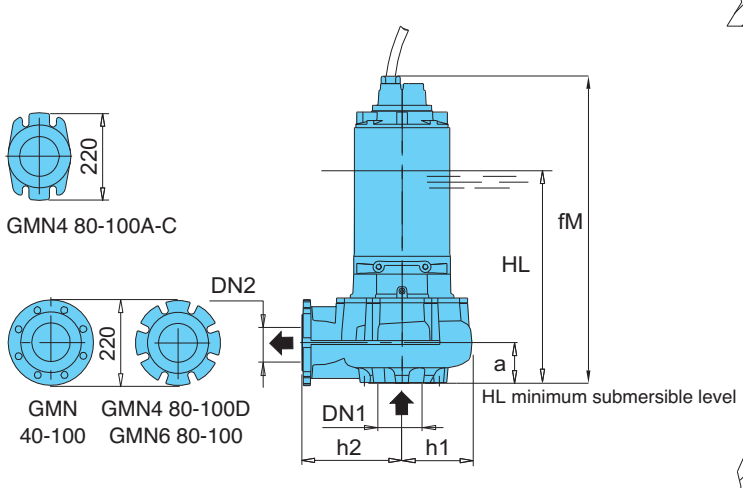

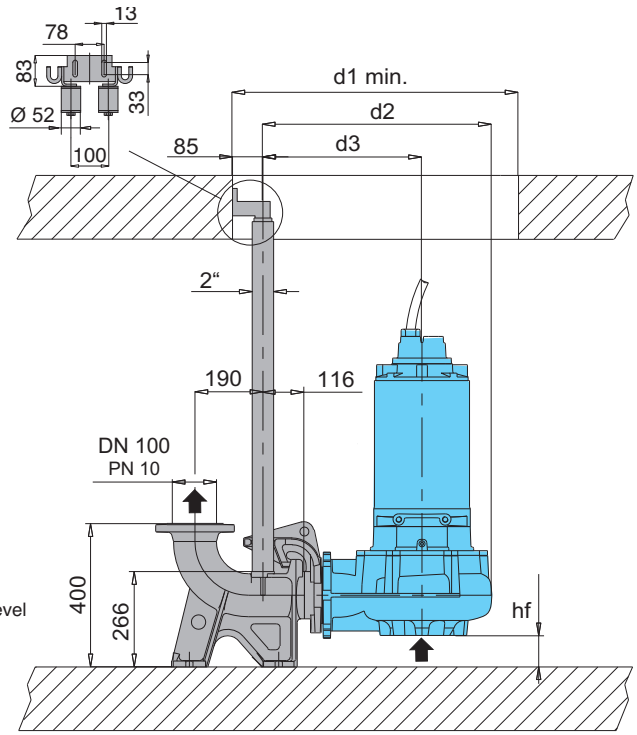

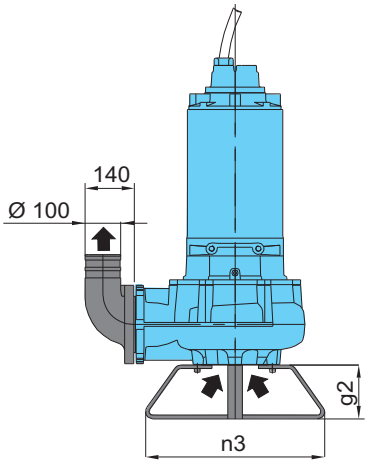

Version with foot and 90° elbow

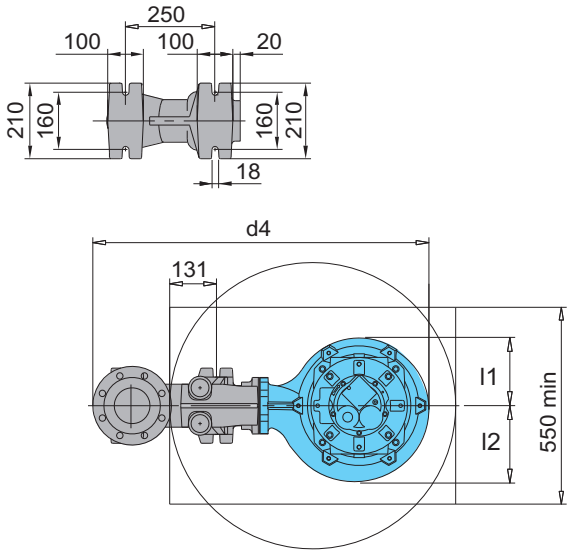

Version with duck foot coupling

TYPE	EN 1092-2 PN 10		Dimensions mm														Weight kg
	DN1	DN2	fM	HL	hf	a	l1	l2	d1	d2	d3	d4	h1	h2	n3	g2	
GMN 40-100D/A GMN 40-100C/A GMN 40-100B/A	125	100	794	480	127	73	168	184	750	628	441	928	187	275	500	150	206
GMN 40-100S/A	125	100	1269	570	127	73	193	193	800	628	441	928	187	275	500	150	340
GMN4 80-100D/A	125	100	597	424	62	138	180	231	850	673	466	973	207	300	500	150	115
GMN4 80-100C/A	125	100	852	526	54	147	189	212	800	640	445	940	195	279	500	150	175
GMN4 80-100A/A	125	100	920	570	54	147	189	212	800	640	445	940	195	279	500	150	205
GMN6 80-100B/A GMN6 80-100A/A	125	100	531 597	372 424	62	138	180	231	850	673	466	973	207	300	500	150	96 114

CALPEDA ROMANIA - INFINITY PUMPS SRL
Tel: 0268.33.47.47 / 0722.244.944
vanzari@calpeda.ro | www.calpeda.ro

GMN

Submersible pumps
with channels impeller

Dimensions and weights

GMN6 80-150
GMN6 100-150
GMN4 80-150
GMN4 100-150

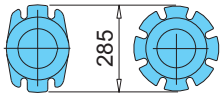

GMN6 80-150 | GMN6 100-150 GMN4 80-150 GMN4 100-150

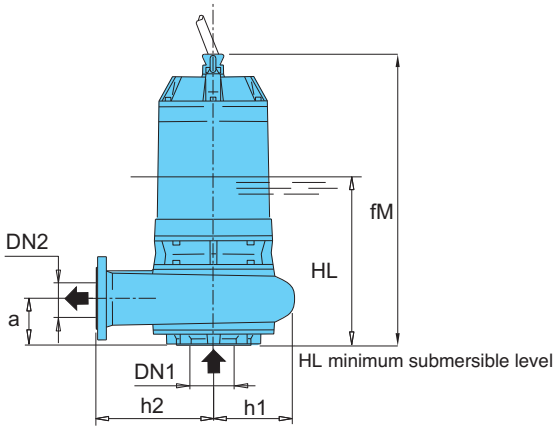

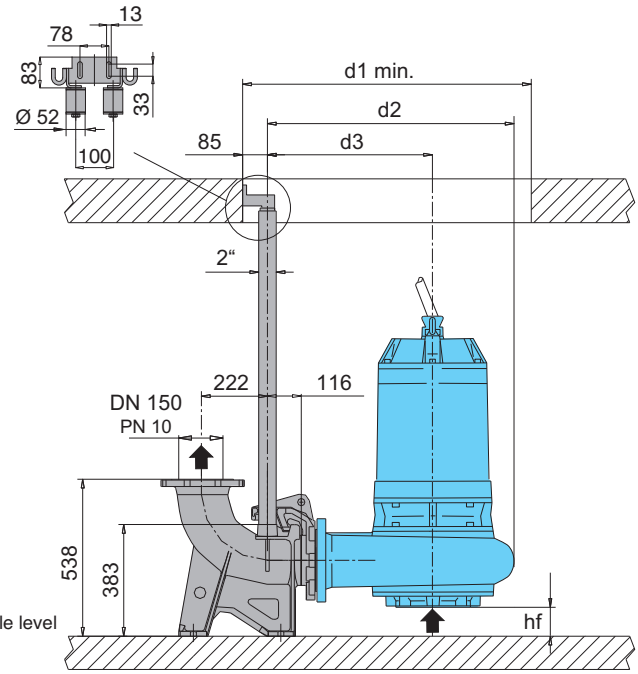

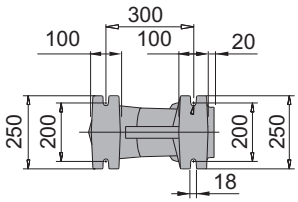

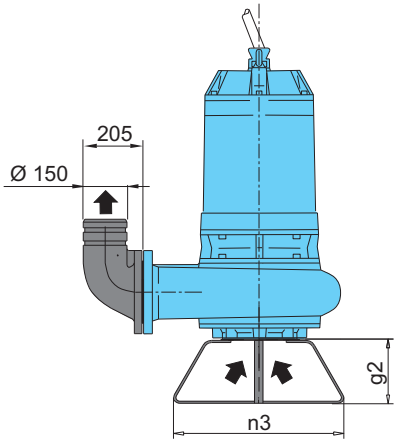

Version with foot and 90° elbow

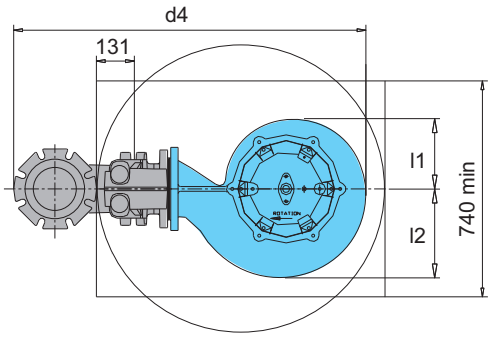

Version with duck foot coupling

TYPE	EN 1092-2 PN 10		Dimensions mm														Weight kg
	DN1	DN2	fM	HL	hf	a	l1	l2	d1	d2	d3	d4	h1	h2	n3	g2	
GMN6 80-150B/A	150	150	820	540	113	147	191	223	850	673	467	1038	206	301	600	225	190
GMN6 80-150A/A			933	580													220
GMN6 100-150B/B	150	150	1274	737	80	180	239	304	990	840	566	1208	273	400	500	225	382
GMN6 100-150A/B																	
GMN4 80-150C/B	150	150	1409	737	80	180	239	304	990	840	566	1208	273	400	500	225	450
GMN4 80-150B/B	150	150	1439	742	80	180	239	304	990	840	566	1208	273	400	500	225	515
GMN4 100-150G/A	150	150	1409	737	80	180	239	304	990	840	566	1208	273	400	500	225	430
GMN4 100-150F/A																	
GMN4 100-150E/B																	
GMN4 100-150D/B	150	150	1439	742	80	180	239	304	990	840	566	1208	273	400	500	225	518
GMN4 100-150S/B																	

CALPEDA ROMANIA - INFINITY PUMPS SRL
Tel: 0268.33.47.47 / 0722.244.944
vanzari@calpeda.ro | www.calpeda.ro

GMN

Submersible pumps
with channels impeller

Dimensions and weights

GMN4 100-200
GMN6 100-200
GMN8 100-200

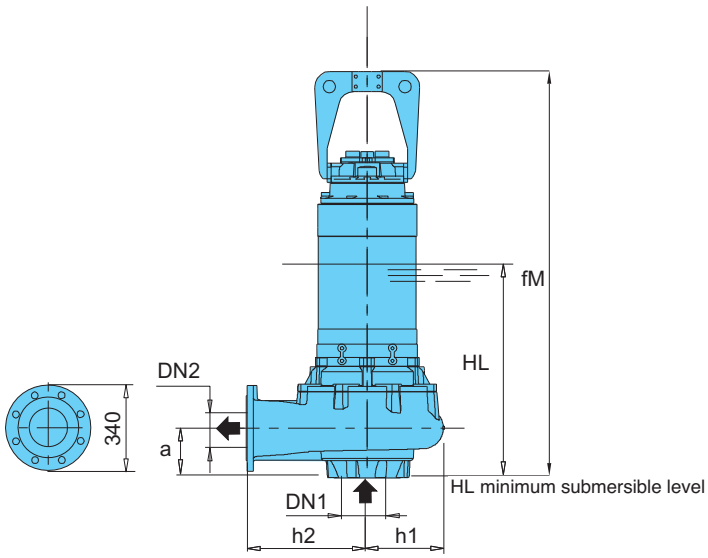

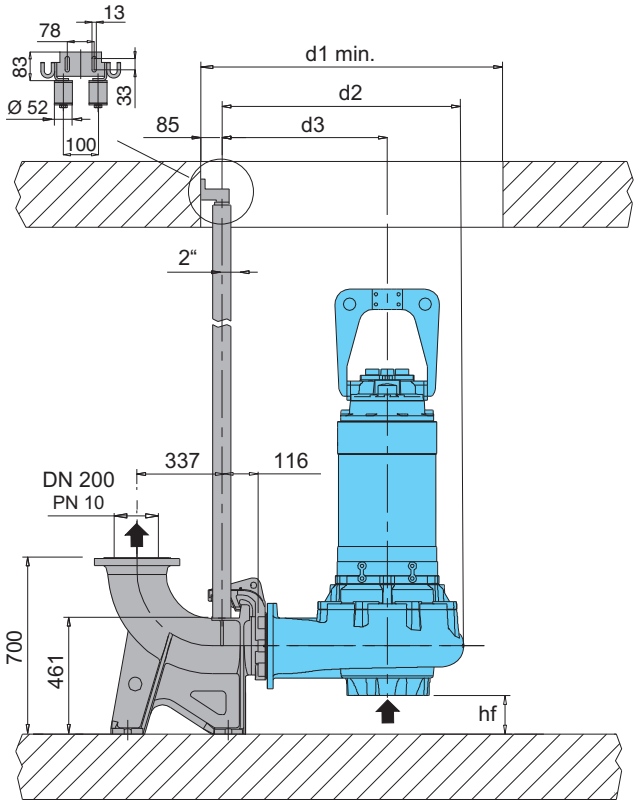

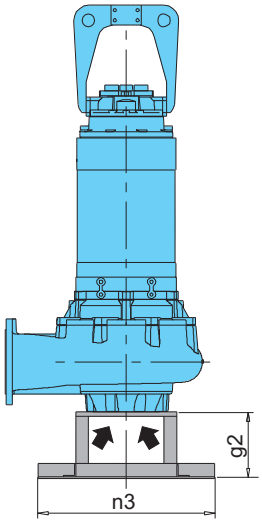

Version with foot

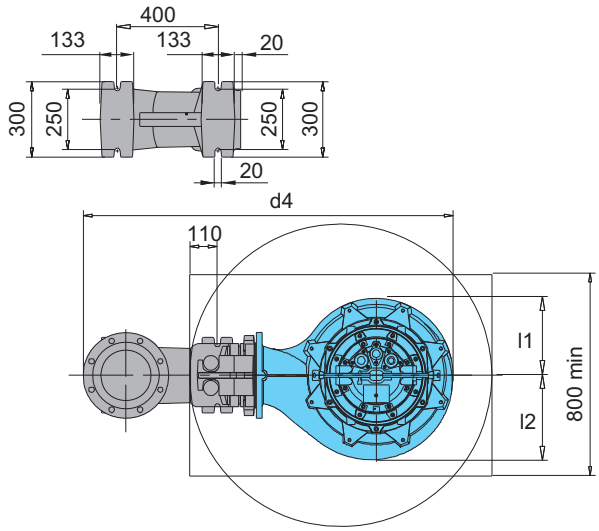

Version with duck foot coupling

TYPE	EN 1092-2 PN 10		Dimensions mm														Weight kg
	DN1	DN2	fM	HL	hf	a	l1	l2	d1	d2	d3	d4	h1	h2	n3	g2	
GMN4 100-200C/A	200	200	1613	780	153	198	306	335	1200	962	656	1469	306	480	700	265	665
GMN4 100-200B/A																	
GMN4 100-200A/A																	
GMN6 100-200E/B	200	200	1256	665	153	180	269	336	1200	958	656	1467	303	480	700	265	385
GMN6 100-200D/B																	
GMN8 100-200B/C	200	200	1392	665	153	180	269	335	1200	958	656	1467	303	480	700	265	435
GMN8 100-200A/A																	

CALPEDA ROMANIA - INFINITY PUMPS SRL
Tel: 0268.33.47.47 / 0722.244.944
vanzari@calpeda.ro | www.calpeda.ro

GMN

Submersible pumps
with channels impeller

Dimensions and weights

GMN4 100-250
GMN6 100-250
GMN8 100-250

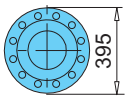

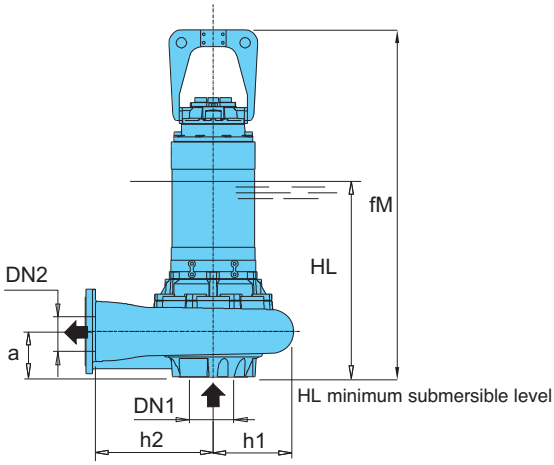

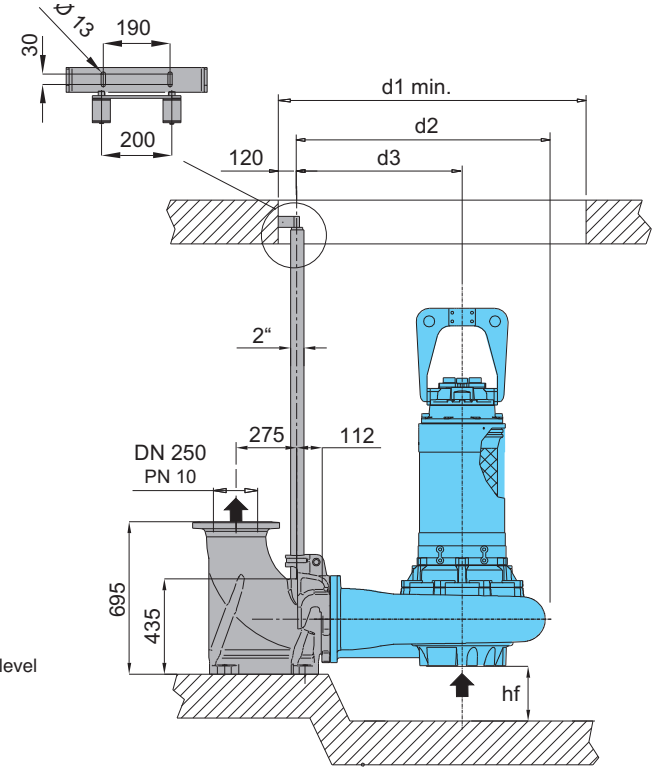

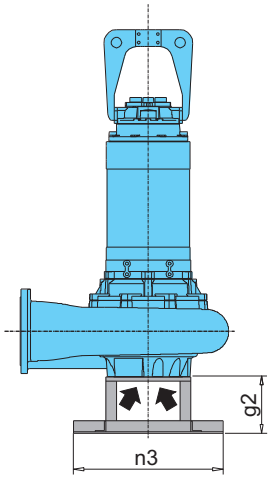

Version with foot

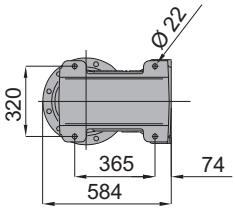

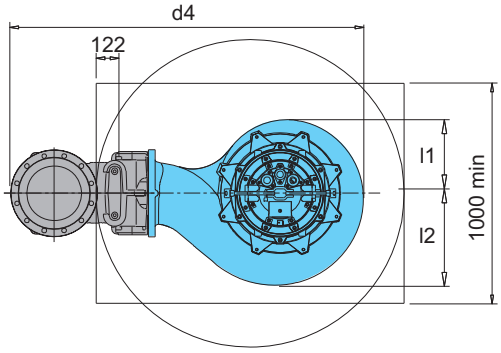

Version with duck foot coupling

TYPE	EN 1092-2 PN 10		Dimensions mm														Weight kg
	DN1	DN2	fM	HL	hf	a	l1	l2	d1	d2	d3	d4	h1	h2	n3	g2	
GMN4 100-250D	250	250	1710	797	250	214	336	419	1400	1130	752	1602	378	600	700	265	914
GMN4 100-250C																	
GMN4 100-250B																	
GMN4 100-250A																	
GMN6 100-250D	250	250	1408	735	250	180	336	419	1400	1130	752	1602	378	600	700	265	530
GMN6 100-250C			1437														590
GMN6 100-250B	250	250	1629	800	286	214	336	419	1400	1130	752	1602	378	600	700	265	750
GMN6 100-250A																	
GMN8 100-250B/A	250	250	1408	735	250	180	336	419	1400	1130	752	1602	378	600	700	265	520
GMN8 100-250A/B			1437														600

CALPEDA ROMANIA - INFINITY PUMPS SRL
Tel: 0268.33.47.47 / 0722.244.944
vanzari@calpeda.ro | www.calpeda.ro

GMN

Submersible pumps
with channels impeller

Dimensions and weights

GMN6 140-300

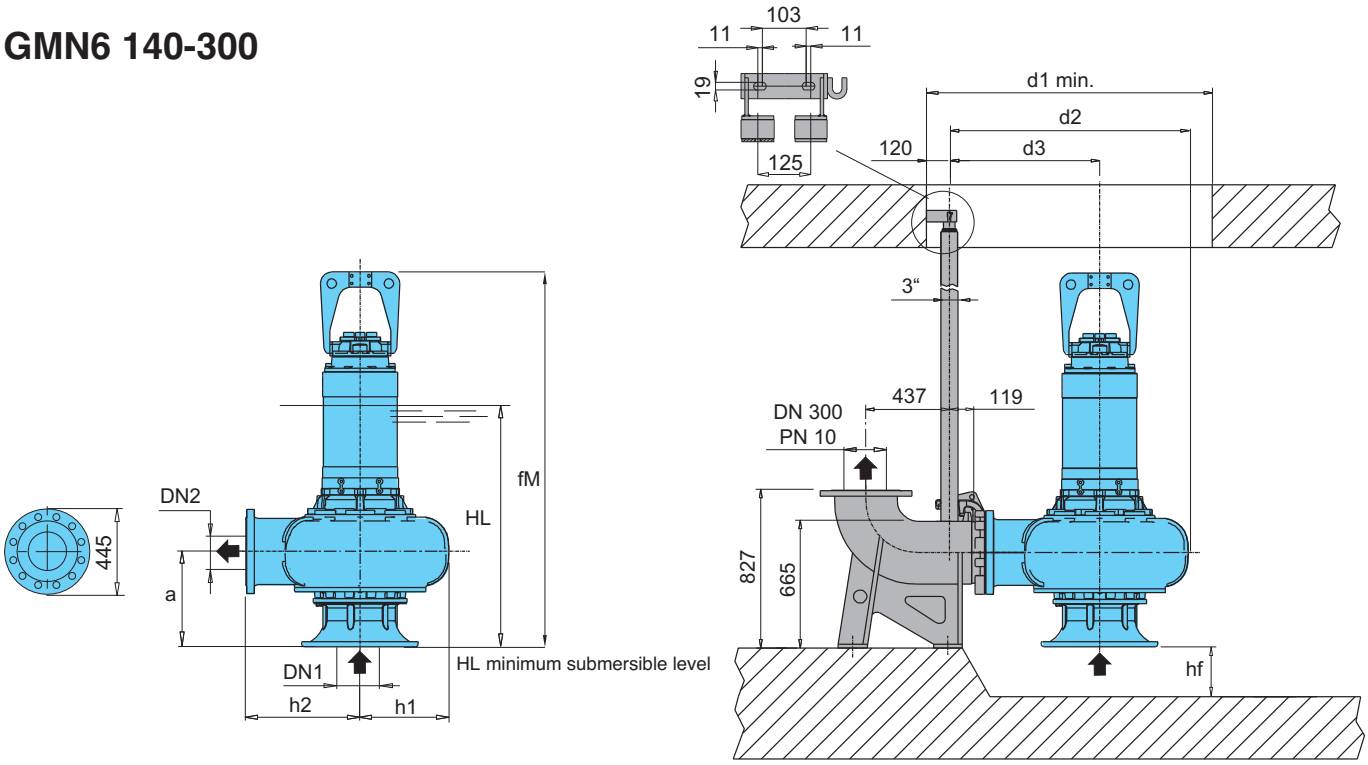

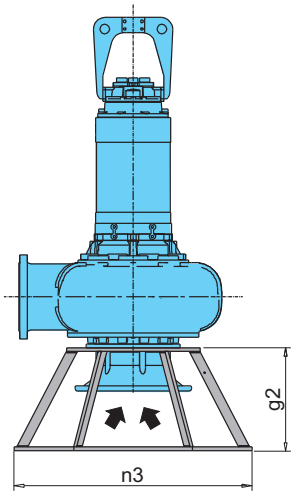

Version with foot

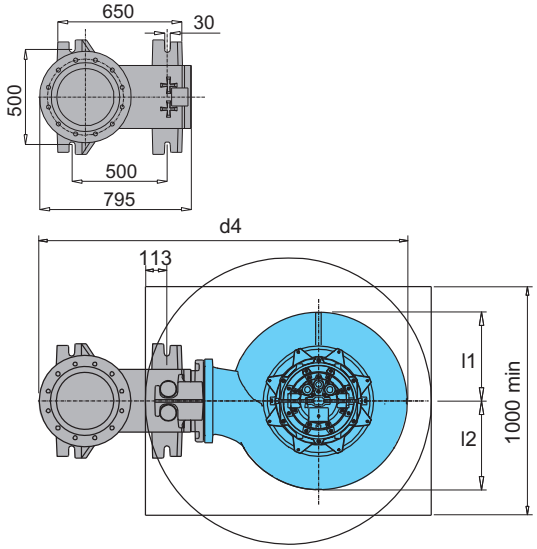

Version with duck foot coupling

TYPE	EN 1092-2 PN 10		Dimensions mm														Weight kg
	DN1	DN2	fM	HL	hf	a	l1	l2	d1	d2	d3	d4	h1	h2	n3	g2	
GMN6 140-300D GMN6 140-300C	350	300	1959	1127	260	494	465	465	1500	1254	789	1930	465	600	1248	540	1030
GMN6 140-300B GMN6 140-300A	350	300	2040	1164	260	494	465	465	1500	1254	789	1930	465	600	1248	540	1190
GMN8 140-300A	350	300	1959	1127	260	494	465	465	1500	1254	789	1930	465	600	1248	540	1024

CALPEDA ROMANIA - INFINITY PUMPS SRL
Tel: 0268.33.47.47 / 0722.244.944
vanzari@calpeda.ro | www.calpeda.ro

GMG

Submersible pumps
with high power grinder

Construction

Submersible pumps with high power grinder.
Twin mechanical seal with oil chamber (lip-seal motor side up to 1,6 kW).
Delivery connection DN 40.

Applications

Suitable for pumping waste water containing long filamentous, Paper and textile materials and organics.
They are particularly suitable for use in domestic, residential and industrial installations
Solid passage from 6 and 7 mm

Operating conditions

Liquid temperature up to 40 °C.
Maximum immersion depth: 20 m (with suitable cable length).
Continuous duty (with pump immerged at minimum level).

Main materials

Pump casing: cast iron EN-GJL-250
Motor casing: cast iron EN-GJL-250
Motor cover: cast iron EN-GJL-250
Impeller: cast iron GS 400
Shaft : stainless steel AISI 420B
Lip seal made of nitrile up to 1,6 kW
Mechanical seal motor side: graphite/ceramic over 1,6 kW
Mechanical seal pump side: silicon carbide/silicon carbide

Motor

2 poles induction, 50Hz
Single-phase version: 230V ± 10%, with float switch and control box with thermal protection and starting capacitors.
Three-phase version: 400V ± 10%,
400/690V ± 10%
Insulation class: H
Protection degree: IP 68
N° of starting x hour: max 15 with regular intervals
Cable: H07RN-F, length 10 m
Other models: contact our sale office
Classification scheme IE3.

Coverage chart

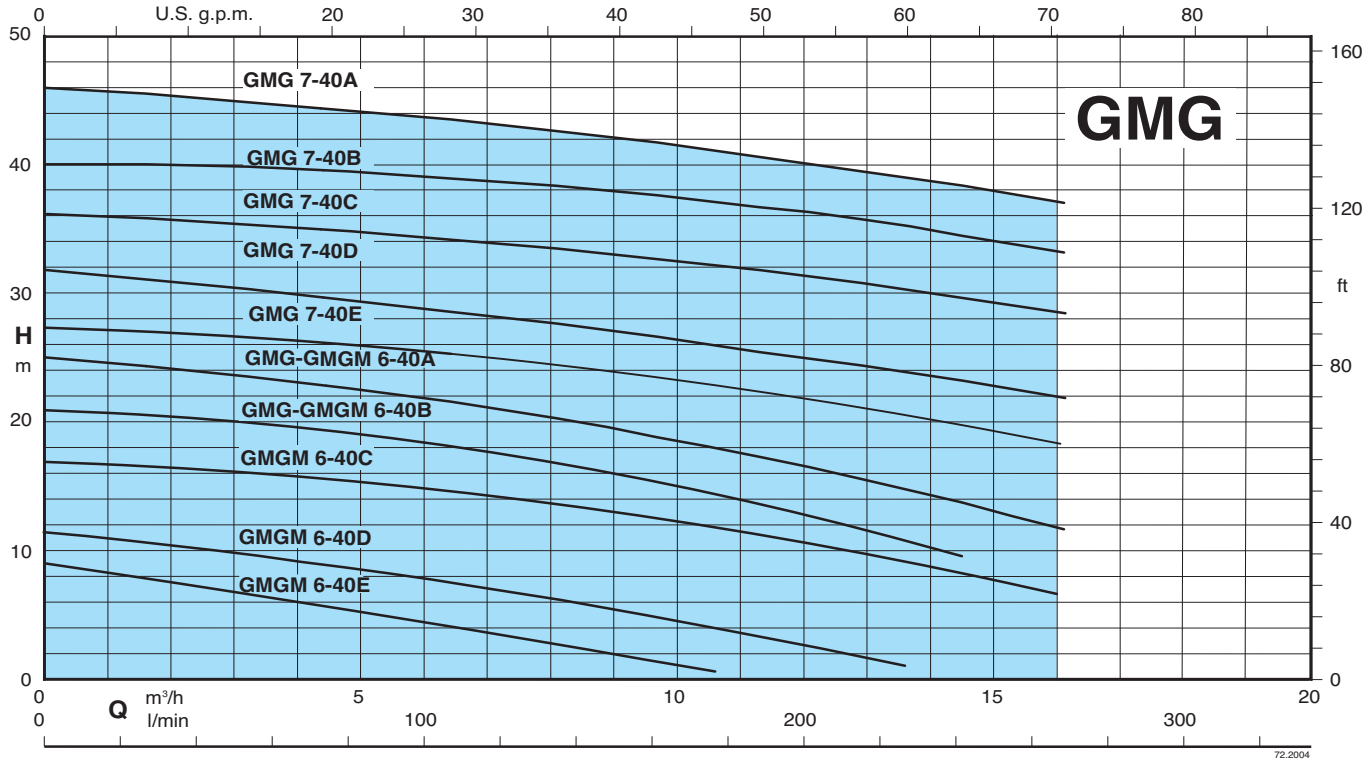

CALPEDA ROMANIA - INFINITY PUMPS SRL
Tel: 0268.33.47.47 / 0722.244.944
vanzari@calpeda.ro | www.calpeda.ro

GMG

Submersible pumps
with high power grinder

Technical data

TYPE	P_2 kW	I_N A	Power Supply	r.p.m.	Starting	DN mm	Free passage Ø mm	Thermal protector	Humidity probe	ATEX Eex
GMGM 6-40E/B	1,1	6,6	1~ 230V	2850	D.O.L.	40	6	●	NO	
GMGM 6-40D/B	1,1	6,6	1~ 230V	2850	D.O.L.	40	6	●	NO	
GMGM 6-40C/A	1,1	6,6	1~ 230V	2850	D.O.L.	40	6	●	NO	
GMGM 6-40B/A	1,5	9	1~ 230V	2850	D.O.L.	40	6	●	NO	
GMG 6-40B/A	1,6	3,1	3~ 400V	2850	D.O.L.	40	6	NO	NO	✔
GMGM 6-40A/A	1,9	11,4	1~ 230V	2850	D.O.L.	40	6	●	NO	
GMG 6-40A/A	2,4	4,5	3~ 400V	2850	D.O.L.	40	6	NO	NO	✔
GMG 7-40E/A	3,1	5,8	3~ 400V	2850	D.O.L.	40	7	NO	NO	✔
GMG 7-40D/A	3,1	5,8	3~ 400V	2850	D.O.L.	40	7	NO	NO	✔
GMG 7-40C/A	4,2	7,7	3~ 400/690V	2850	Y/Δ	40	7	●	●	✔
GMG 7-40B/A	5	9,1	3~ 400/690V	2850	Y/Δ	40	7	●	●	✔
GMG 7-40A/A	5	9,1	3~ 400/690V	2850	Y/Δ	40	7	●	●	✔

P_2 Rated power output I_N Rated current ● Standard ✔ ATEX Eex Version on demand

CALPEDA ROMANIA - INFINITY PUMPS SRL
Tel: 0268.33.47.47 / 0722.244.944
vanzari@calpeda.ro | www.calpeda.ro

GMG

Submersible pumps
with high power grinder

Characteristic curves

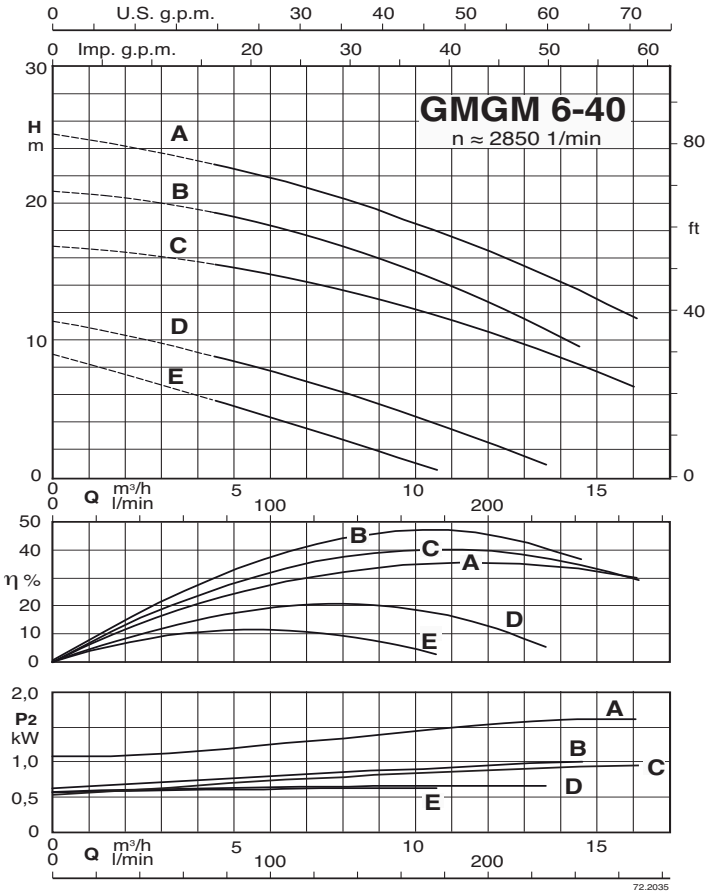

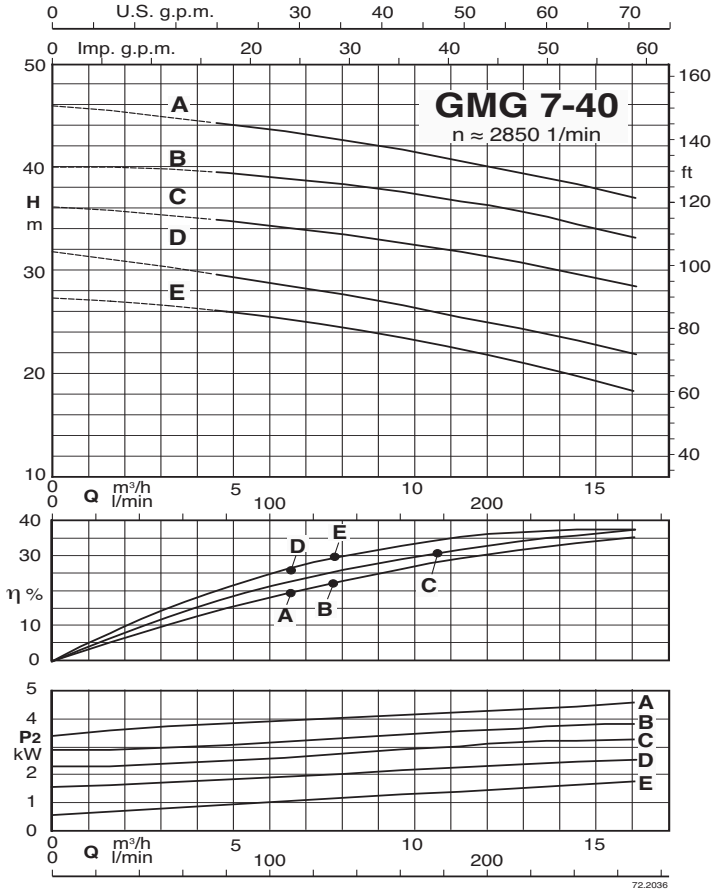

CALPEDA ROMANIA - INFINITY PUMPS SRL
Tel: 0268.33.47.47 / 0722.244.944
vanzari@calpeda.ro | www.calpeda.ro

GMG

Submersible pumps
with high power grinder

Dimensions and weights

GMGM 6-40
GMG 6-40
GMG 7-40

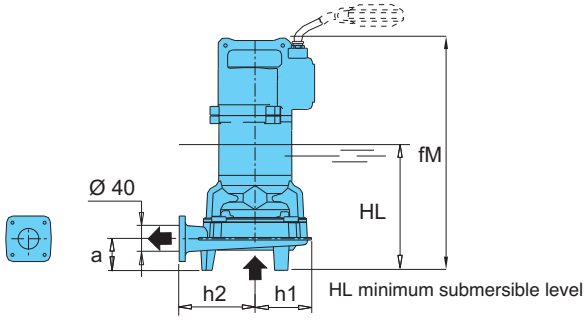

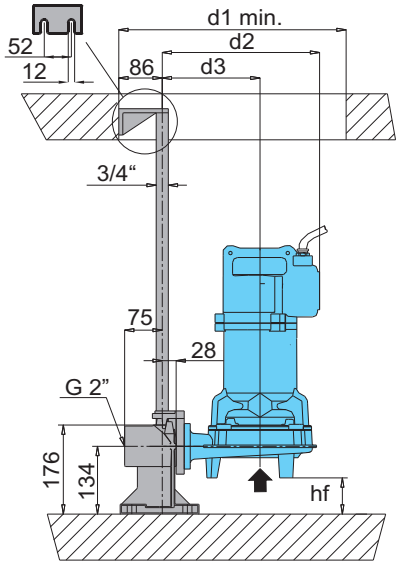

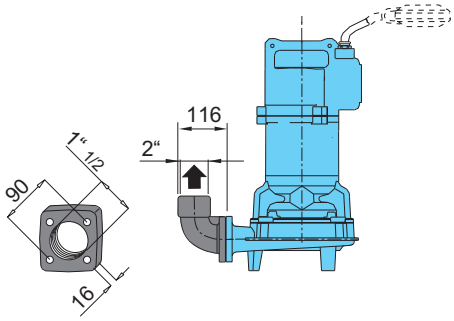

Version with threaded flange and 90° elbow

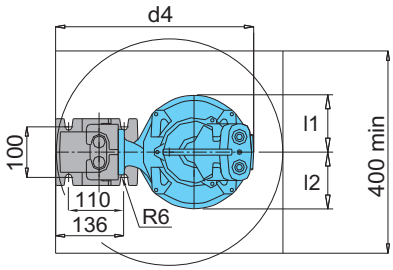

Version with duck foot coupling

TYPE	Dimensions mm													Weight kg
	Ø1	fM	HL	hf	a	l1	l2	d1	d2	d3	d4	h1	h2	
GMGM 6-40E/B GMGM 6-40D/B	40	487	246	65	103	122	122	450	297	178	392	118	135	30
GMGM 6-40C/A GMGM 6-40B/A GMG 6-40B/A GMGM 6-40A/A GMG 6-40A/A	40	464	316	72	63	112	112	450	312	194	392	118	150	40
GMG 7-40E/A GMG 7-40D/A	40	451	325	17	117	121	121	450	327	189	413	138	150	52
GMG 7-40C/A GMG 7-40B/A GMG 7-40A/A	40	510	353	17	117	121	121	450	334	189	420	147	150	67

Control box

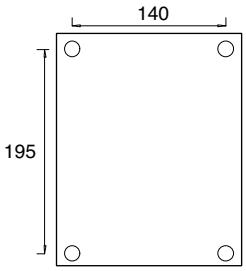

To fix the control panel, use the preposed holes as specify in this drawing.
In order to maintain the protection degree, suitable fixing devices must be used.

CALPEDA ROMANIA - INFINITY PUMPS SRL
Tel: 0268.33.47.47 / 0722.244.944
vanzari@calpeda.ro | www.calpeda.ro

I-GM Submersible pumps AISI 316

calpeda

Construction

Submersible pumps in **AISI 316** stainless steel.
I-GMV with free-flow (vortex) impeller
I-GMC with single-channel impeller
I-GMN with channels impeller
Twin mechanical seal with oil chamber (lip-seal motor side up to 2,4 kW 2 poles).
Delivery connection DN 50-65-80-100-150

Applications

Suitable to pump aggressive and corrosive liquids, particularly to drain waste water in industrial and chemical process plants.
Solid passage from 30 to 100 mm

Operating conditions

Liquid temperature up to 40 °C.
Maximum immersion depth: 20 m (with suitable cable length).
Continuous duty (with pump immerged at minimum level).

Main materials

Pump casing: stainless steel AISI 316
Motor casing: stainless steel AISI 316
Motor cover: stainless steel AISI 316
Impeller: stainless steel AISI 316
Shaft: stainless steel AISI 316L
Screws: stainless steel AISI 316
Mechanical seal motor side: graphite/ceramic/FPM (lip-seal made of nitrile up to 2,4 kW 2 poles).
Mechanical seal pump side: silicon carbide/silicon carbide/FPM

Motor

2 or 4 poles induction, 50Hz
Three-phase version: 400V ± 10%,
400/690V ± 10%
Insulation class: H
Protection degree: IP 68
N° of starting x hour: max 15 with regular intervals
Cable: H07RN-F, length 10 m
Other models: contact our sale office
Classification scheme IE3.

Coverage chart

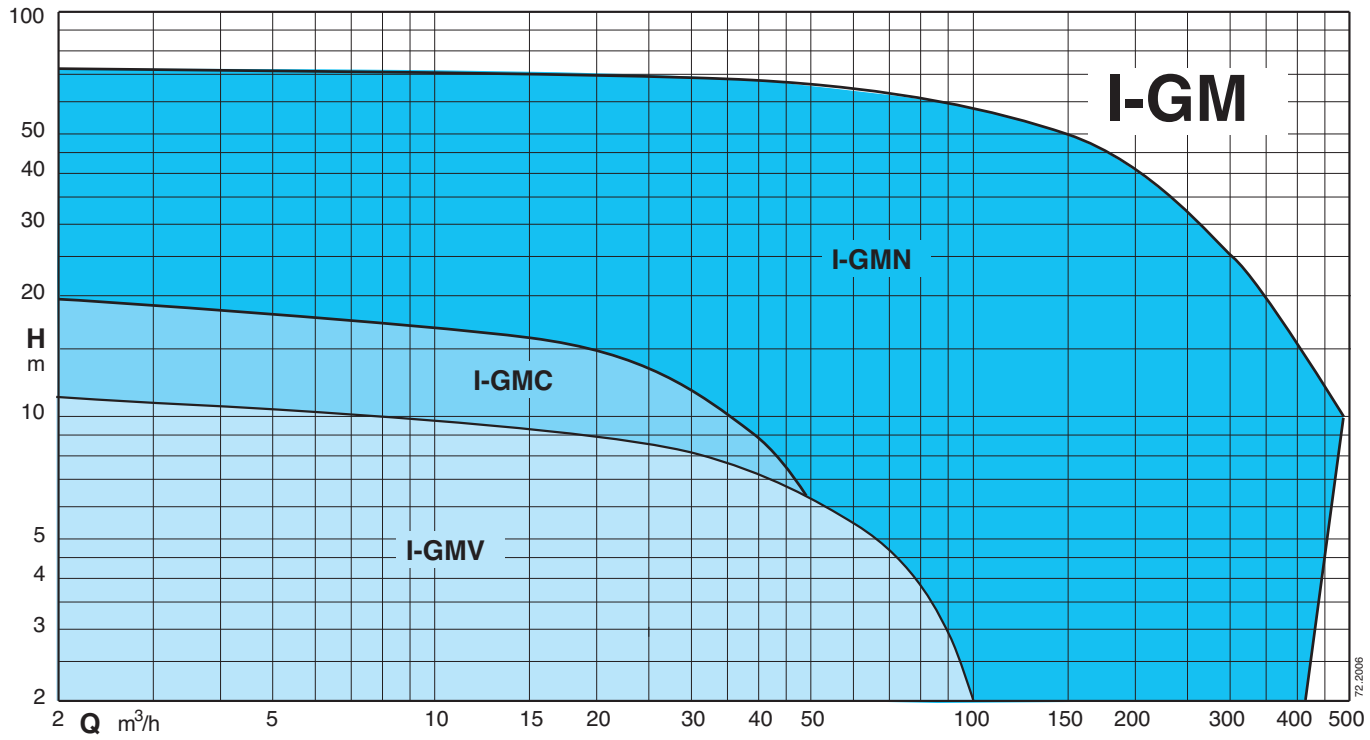

CALPEDA ROMANIA - INFINITY PUMPS SRL
Tel: 0268.33.47.47 / 0722.244.944
vanzari@calpeda.ro | www.calpeda.ro

I-GM Submersible pumps AISI 316

calpeda

Technical data

TYPE	P_2 kW	I_N A	Power Supply	r.p.m.	Starting	DN mm	Free passage Ø mm	Thermal protector	Humidity probe	ATEX Eex
I-GMV 50-50C/A	1,8	3,5	3~ 400V	2850	D.O.L.	50	50	NO	NO	✔
I-GMV 50-50B/B	1,6	3,1	3~ 400V	2850	D.O.L.	50	50	NO	NO	✔
I-GMV 50-50A/B	2,4	4,5	3~ 400V	2850	D.O.L.	50	50	NO	NO	✔
I-GMV4 50-65C/A	1,1	2,4	3~ 400V	1450	D.O.L.	65	50	NO	NO	✔
I-GMV4 50-65B/A	1,4	2,7	3~ 400V	1450	D.O.L.	65	50	NO	NO	✔
I-GMV4 50-65A/A	1,6	3,1	3~ 400V	1450	D.O.L.	65	50	NO	NO	✔
I-GMV4 50-80B/A	2,3	4,4	3~ 400V	1450	D.O.L.	80	50	NO	NO	✔
I-GMV4 50-80A/A	2,8	5,4	3~ 400V	1450	D.O.L.	80	50	NO	NO	✔
I-GMC 40-65B/A	2,1	3,9	3~ 400V	2850	D.O.L.	65	40	NO	NO	✔
I-GMC 40-65A/A	2,8	6	3~ 400V	2850	D.O.L.	65	40	NO	NO	✔
I-GMN 30-65B/A	3,1	5,8	3~ 400V	2850	D.O.L.	65	30	NO	NO	✔
I-GMN 30-65A/A	3,6	6,6	3~ 400V	2850	D.O.L.	65	30	NO	NO	✔
I-GMN 30-80B/A	5	9,1	3~ 400/690V	2850	Y/Δ	80	30	●	●	✔
I-GMN 30-80A/A	6,5	11,8	3~ 400/690V	2850	Y/Δ	80	30	●	●	✔
I-GMN 30-80S/A	7,5	13,5	3~ 400/690V	2850	Y/Δ	80	30	●	●	
I-GMN 40-100D/A	12	21,7	3~ 400/690V	2850	Y/Δ	100	40	●	●	✔
I-GMN 40-100C/A	13,8	24,8	3~ 400/690V	2850	Y/Δ	100	40	●	●	✔
I-GMN 40-100B/A	16,6	29,8	3~ 400/690V	2850	Y/Δ	100	40	●	●	✔
I-GMN 40-100S/A	20	35,8	3~ 400/690V	2850	Y/Δ	100	40	●	●	✔
I-GMN4 60-100B/A	6	11,5	3~ 400/690V	1450	Y/Δ	100	60	●	●	✔
I-GMN4 60-100A/A	7,1	13,5	3~ 400/690V	1450	Y/Δ	100	60	●	●	✔
I-GMN4 80-100B/A	10	19	3~ 400/690V	1450	Y/Δ	100	80	●	●	✔
I-GMN4 80-100A/A	10	19	3~ 400/690V	1450	Y/Δ	100	80	●	●	✔
I-GMN4 100-150B/A	23,6	43,3	3~ 400/690V	1450	Y/Δ	150	100	●	●	
I-GMN4 100-150A/A	30	54,3	3~ 400/690V	1450	Y/Δ	150	100	●	●	

P_2 Rated power output I_N Rated current ● Standard ✔ ATEX Eex Version on demand

CALPEDA ROMANIA - INFINITY PUMPS SRL
Tel: 0268.33.47.47 / 0722.244.944
vanzari@calpeda.ro | www.calpeda.ro

I-GM Submersible pumps AISI 316

Characteristic curves

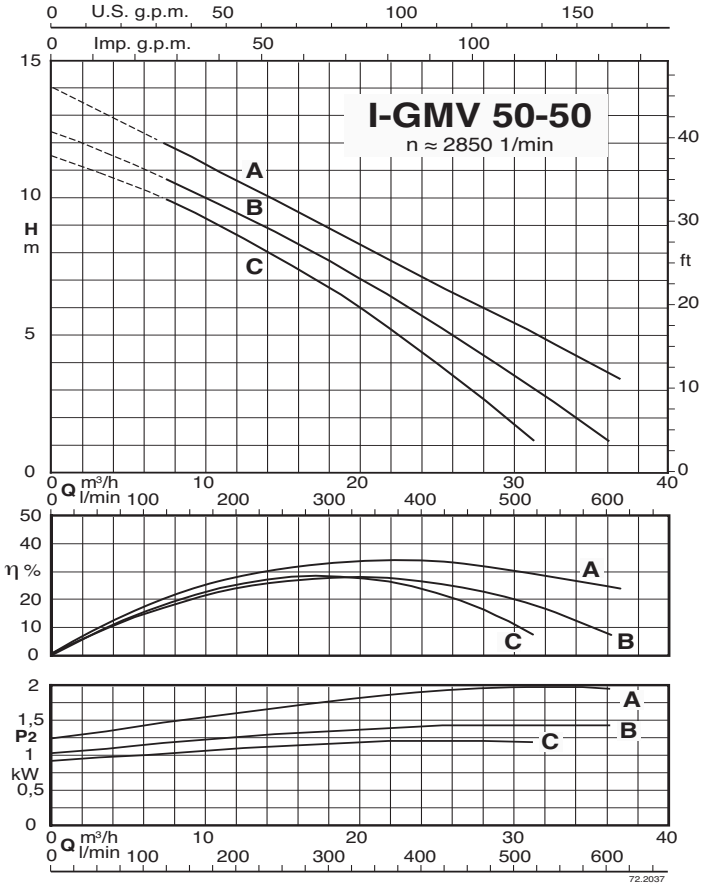

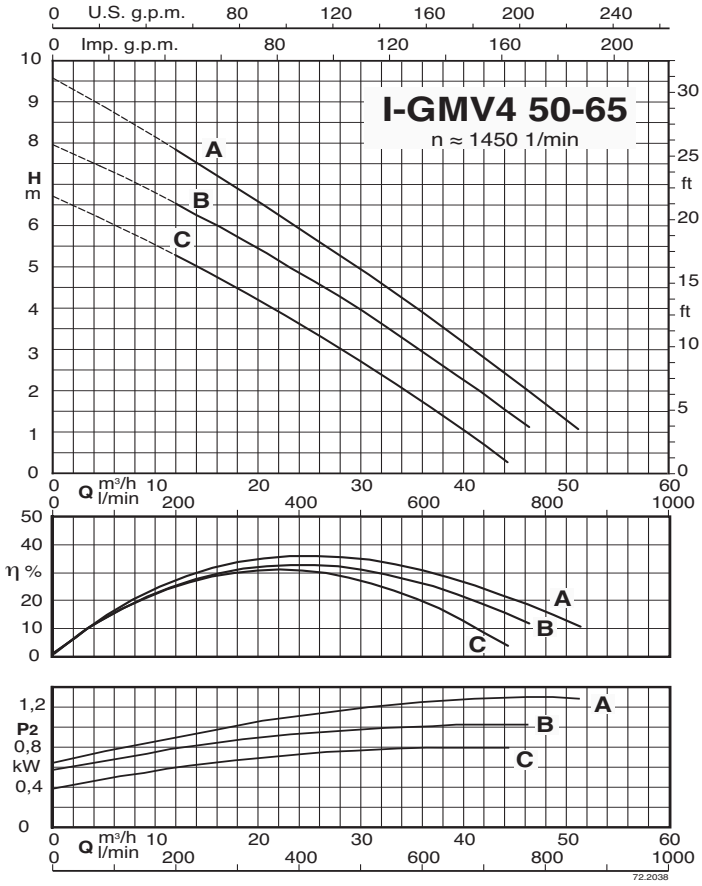

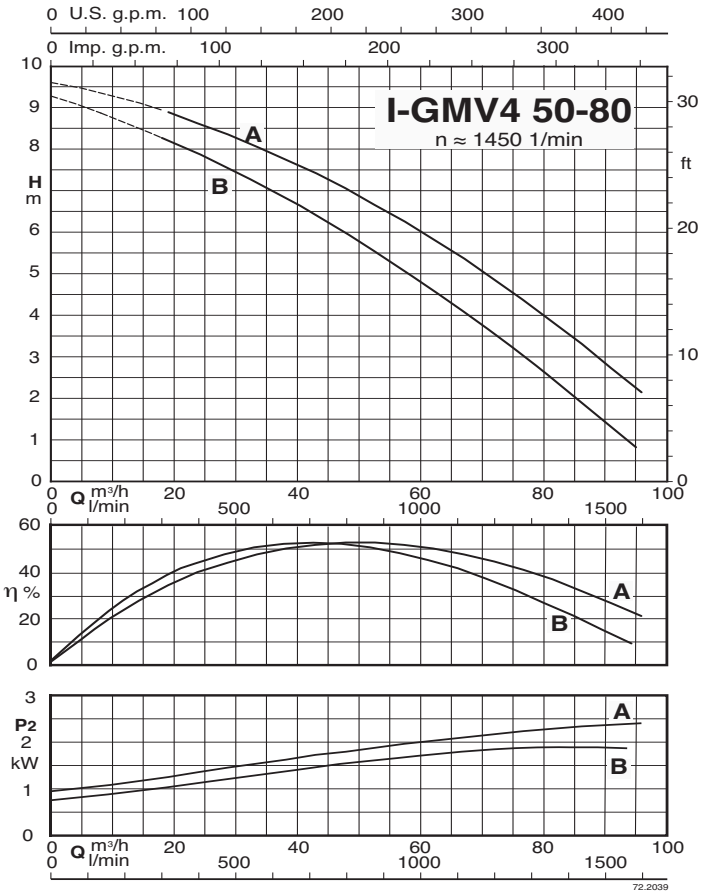

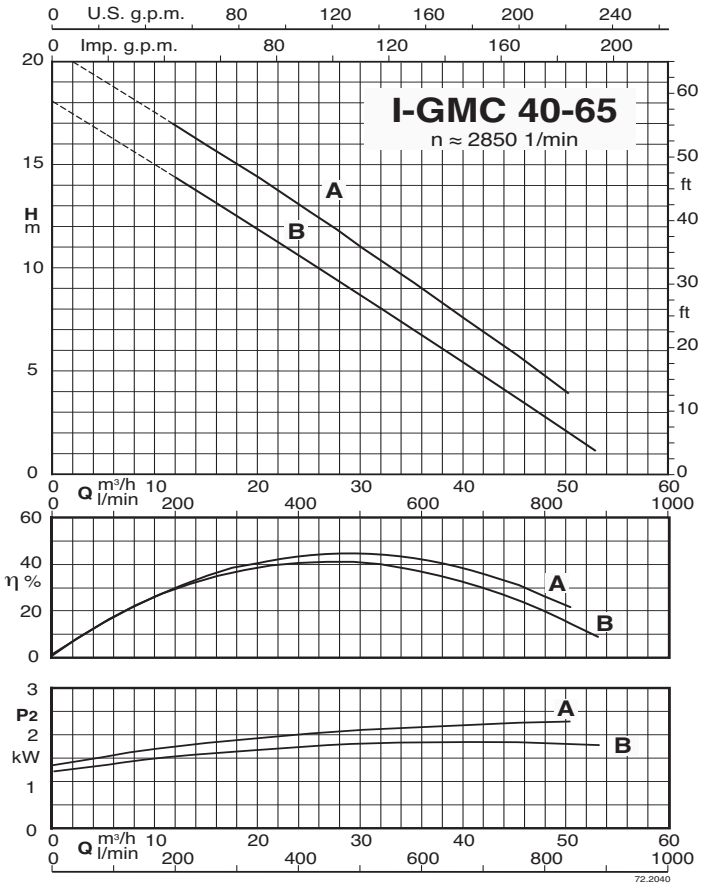

CALPEDA ROMANIA - INFINITY PUMPS SRL
Tel: 0268.33.47.47 / 0722.244.944
vanzari@calpeda.ro | www.calpeda.ro

I-GM Submersible pumps AISI 316

Characteristic curves

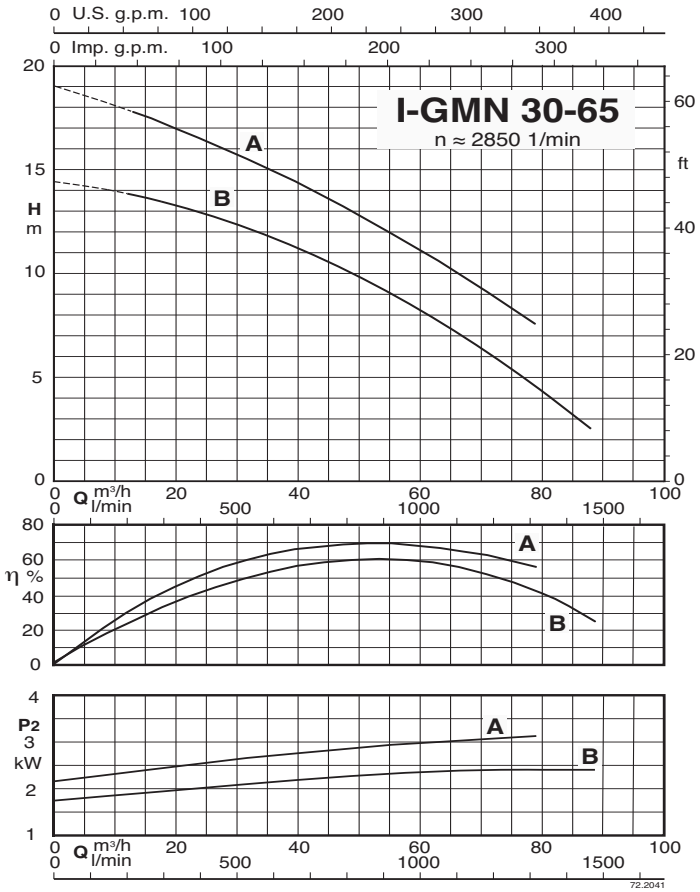

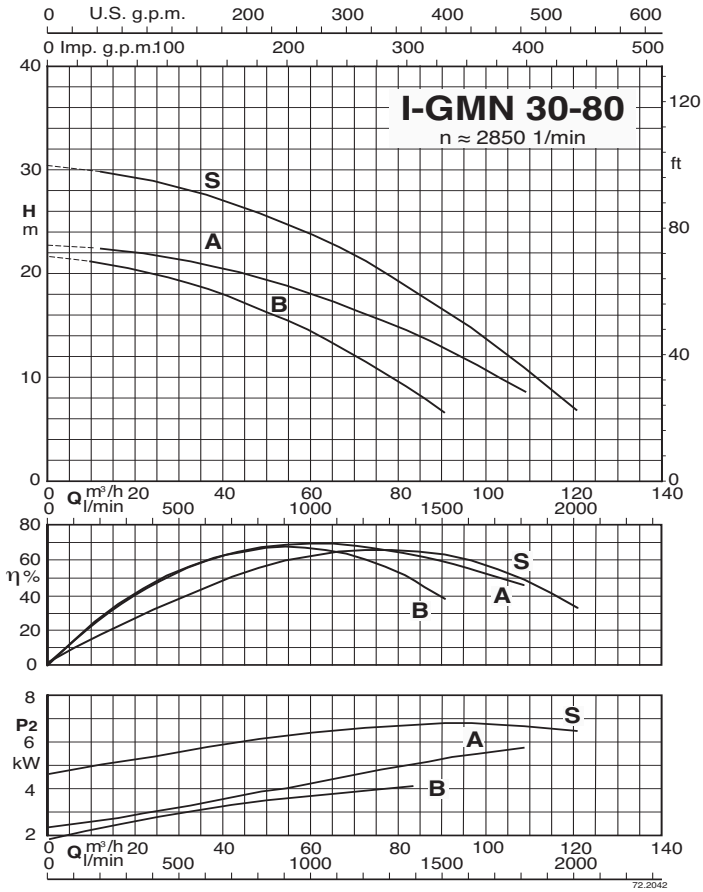

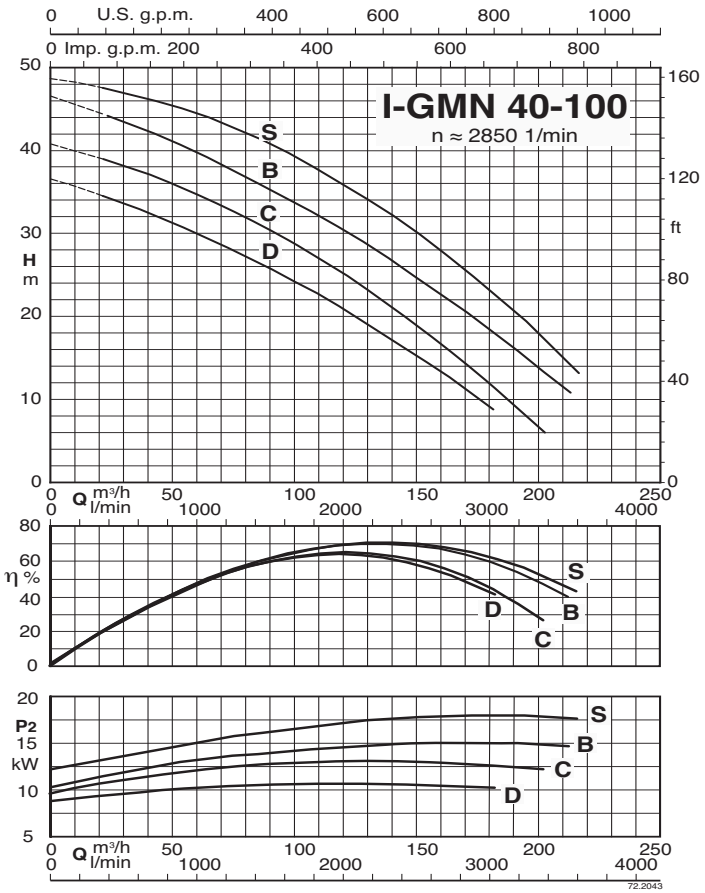

CALPEDA ROMANIA - INFINITY PUMPS SRL
Tel: 0268.33.47.47 / 0722.244.944
vanzari@calpeda.ro | www.calpeda.ro

I-GM Submersible pumps AISI 316

Characteristic curves

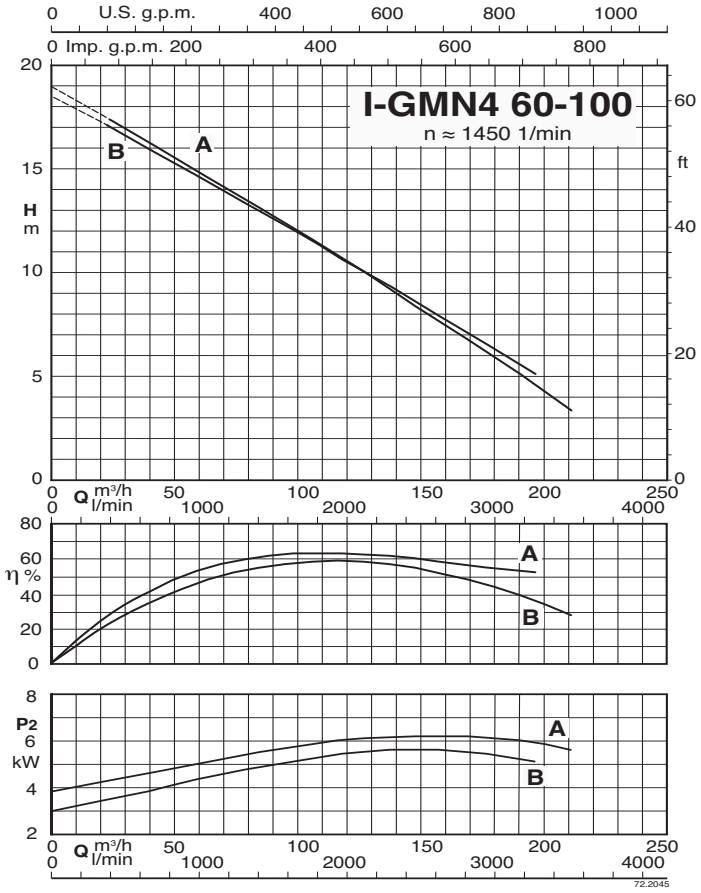

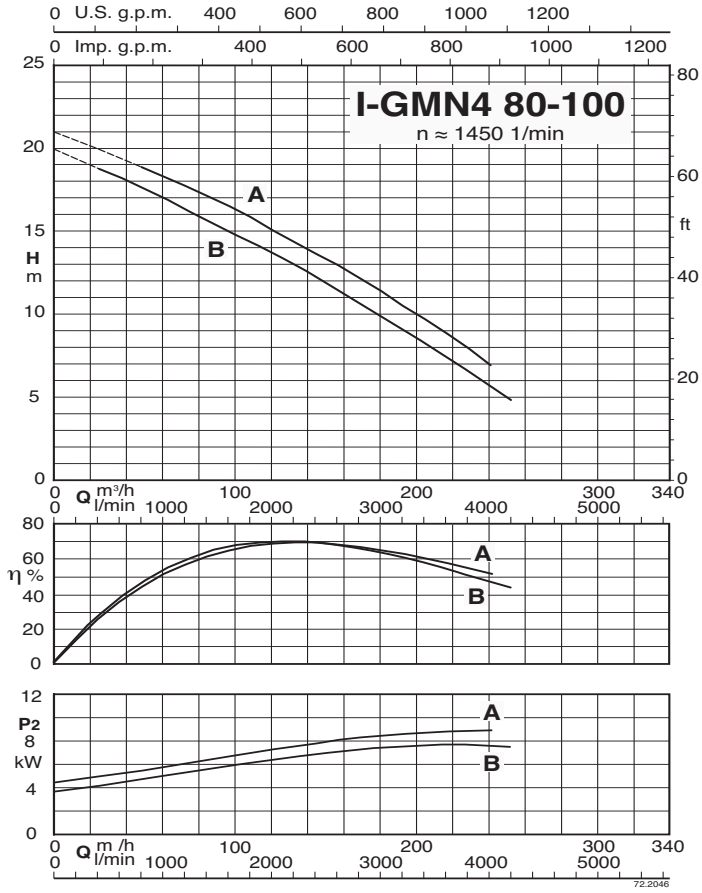

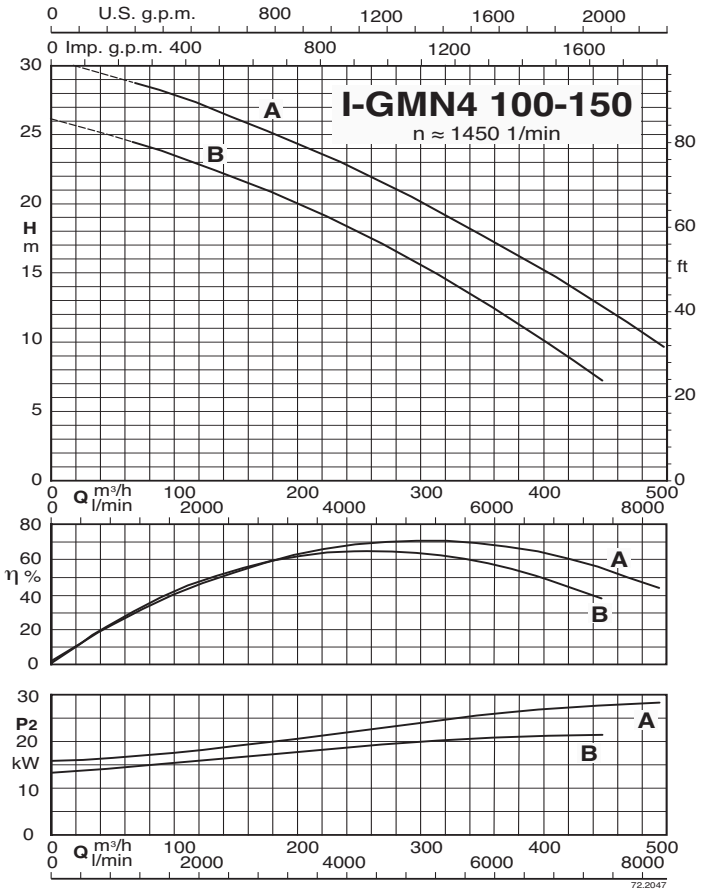

CALPEDA ROMANIA - INFINITY PUMPS SRL
Tel: 0268.33.47.47 / 0722.244.944
vanzari@calpeda.ro | www.calpeda.ro

Dimensions and weights

I-GMV 50-50

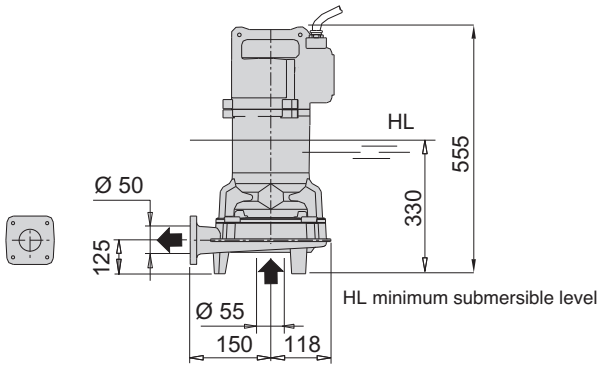

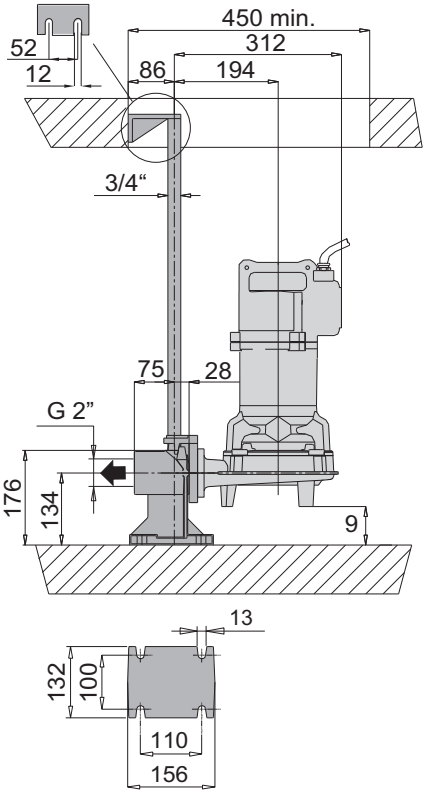

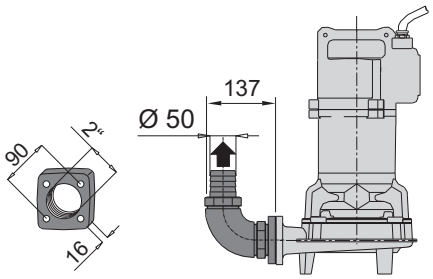

Version with threaded flange and 90° elbow

Version with duck foot coupling

TYPE	Weight kg
I-GMV 50-50C/A	46
I-GMV 50-50B/B	
I-GMV 50-50A/B	

CALPEDA ROMANIA - INFINITY PUMPS SRL
Tel: 0268.33.47.47 / 0722.244.944
vanzari@calpeda.ro | www.calpeda.ro

Dimensions and weights

I-GMV4 50-65
I-GMC 40-65

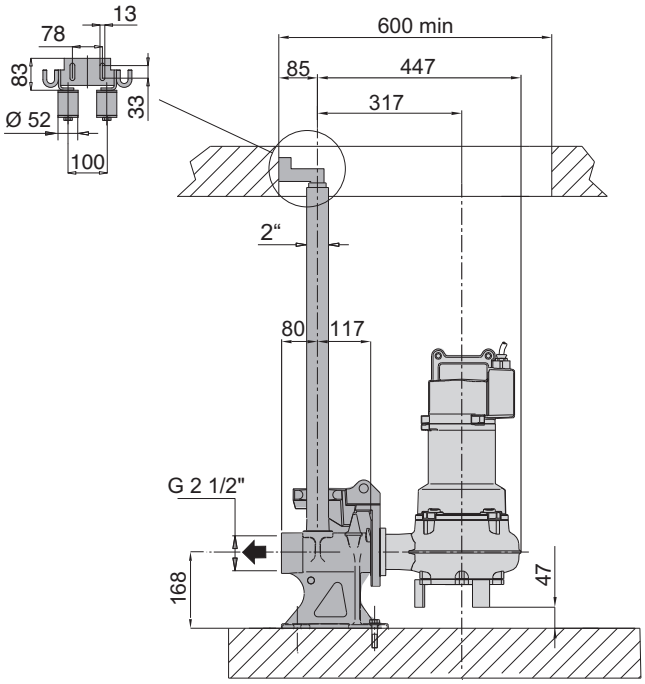

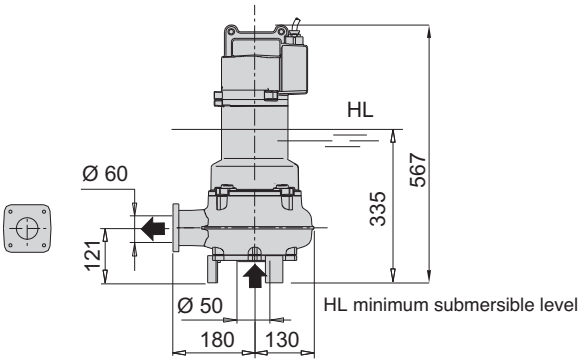

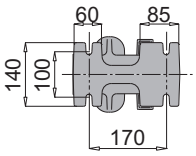

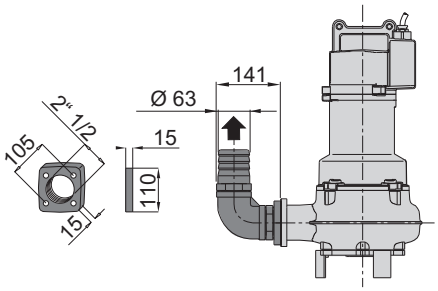

Version with threaded flange and 90° elbow

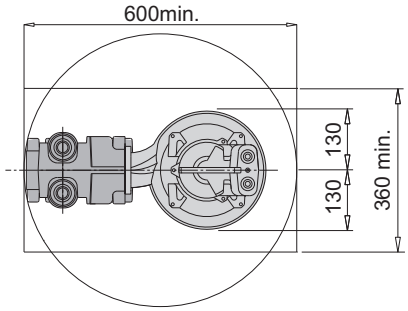

Version with duck foot coupling

TYPE	Weight kg
I-GMV4 50-65C/A	47
I-GMV4 50-65B/A	
I-GMV4 50-65A/A	
I-GMC 40-65B/A	49
I-GMC 40-65A/A	

CALPEDA ROMANIA - INFINITY PUMPS SRL
Tel: 0268.33.47.47 / 0722.244.944
vanzari@calpeda.ro | www.calpeda.ro

Dimensions and weights

I-GMN 30-65

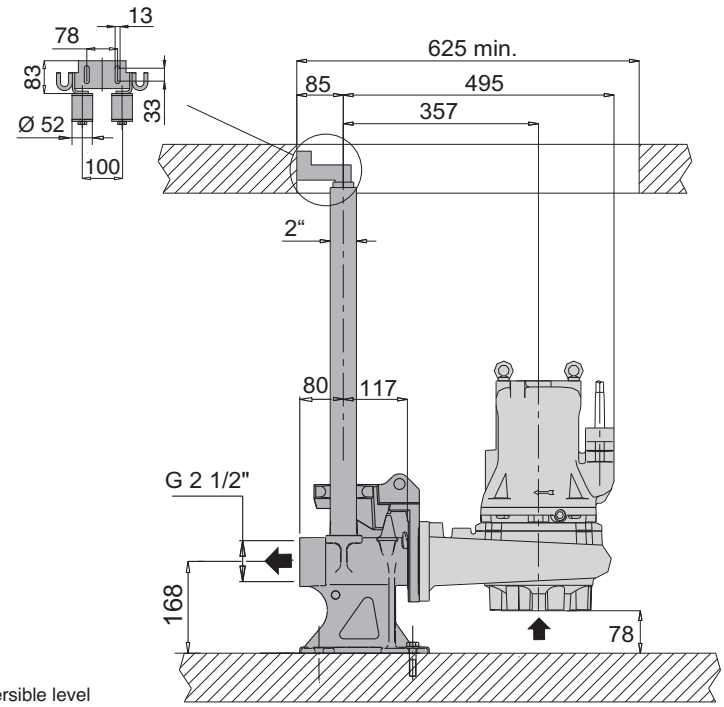

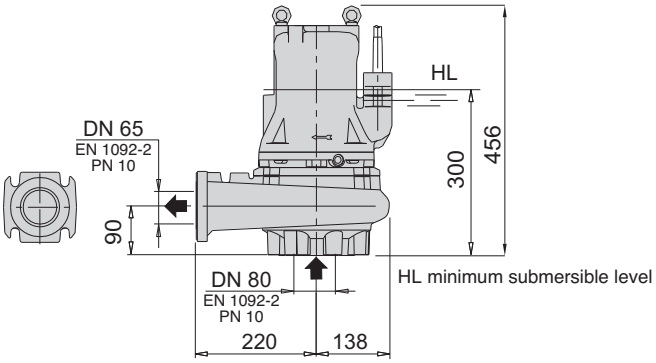

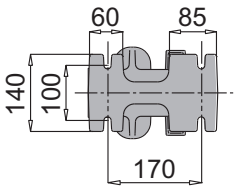

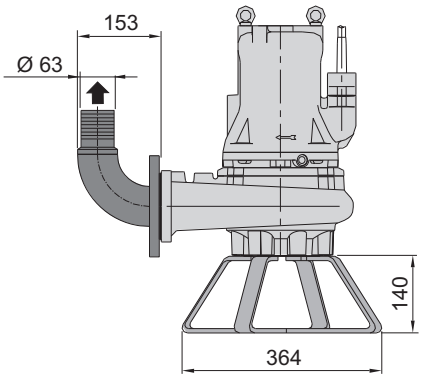

Version with foot and 90° elbow

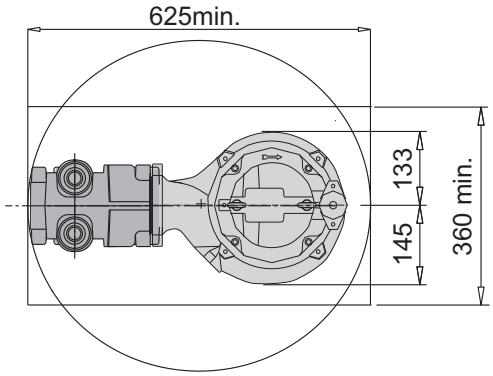

Version with duck foot coupling

TYPE	Weight kg
I-GMN 30-65B/A	62
I-GMN 30-65A/A	

CALPEDA ROMANIA - INFINITY PUMPS SRL
Tel: 0268.33.47.47 / 0722.244.944
vanzari@calpeda.ro | www.calpeda.ro

Dimensions and weights

I-GMV4 50-80
I-GMN 30-80

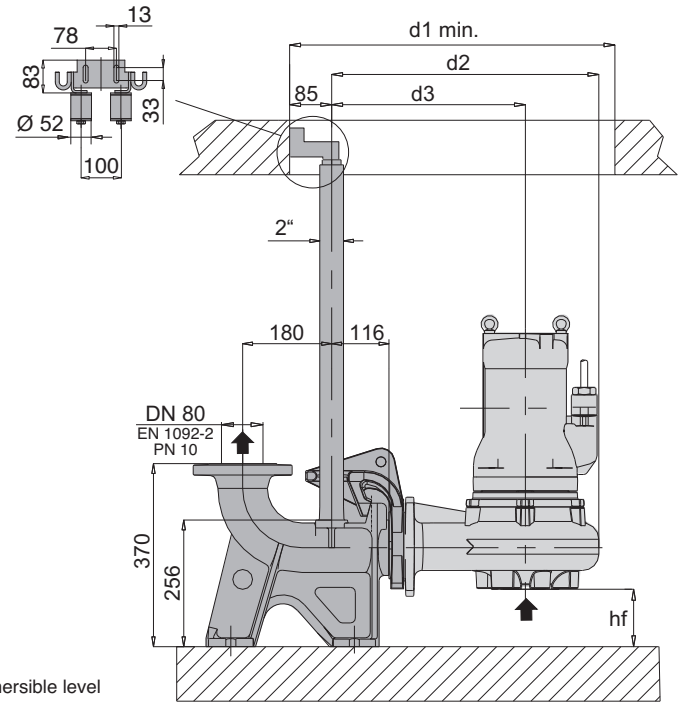

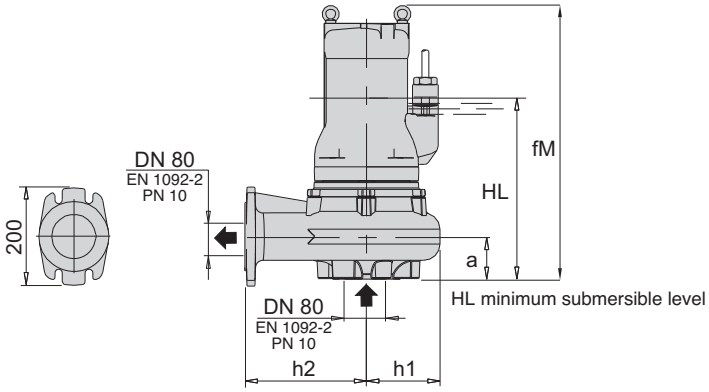

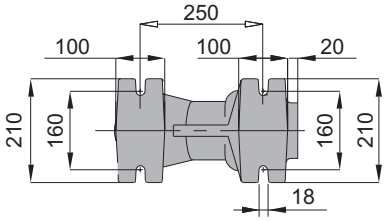

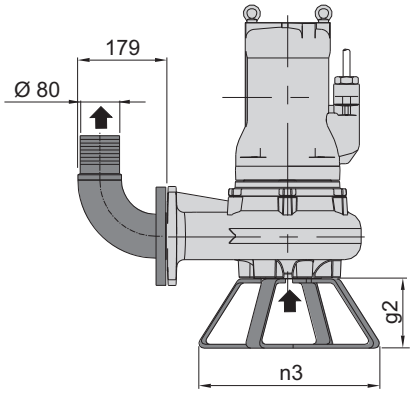

Version with foot and 90° elbow

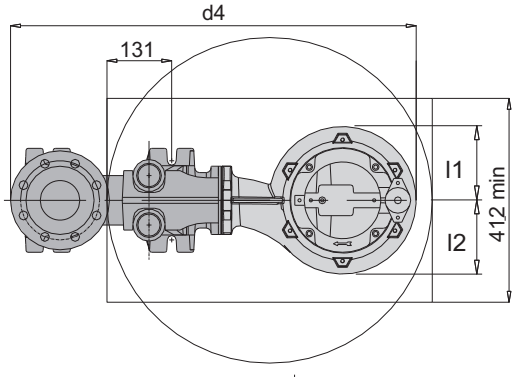

Version with duck foot coupling

TYPE	EN 1092-2 PN 10		Dimensions mm														Weight kg
	DN1	DN2	fM	HL	hf	a	l1	l2	d1	d2	d3	d4	h1	h2	n3	g2	
I-GMV4 50-80B/A I-GMV4 50-80A/A	80	80	519	363	84	116	136	157	658	511	366	791	145	220	370	140	67
I-GMN 30-80B/A I-GMN 30-80A/A	80	80	515	330	110	90	133	145	700	511	366	791	145	220	370	140	83
I-GMN 30-80S/A	100	80	767	438	132	68	165	165	700	571	386	851	185	220	476	150	170

CALPEDA ROMANIA - INFINITY PUMPS SRL
Tel: 0268.33.47.47 / 0722.244.944
vanzari@calpeda.ro | www.calpeda.ro

I-GM Submersible pumps AISI 316

Dimensions and weights

I-GMN 40-100
I-GMN4 60-100
I-GMN4 80-100

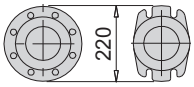

I-GMN 40-100 I-GMN4 60-100 80-100

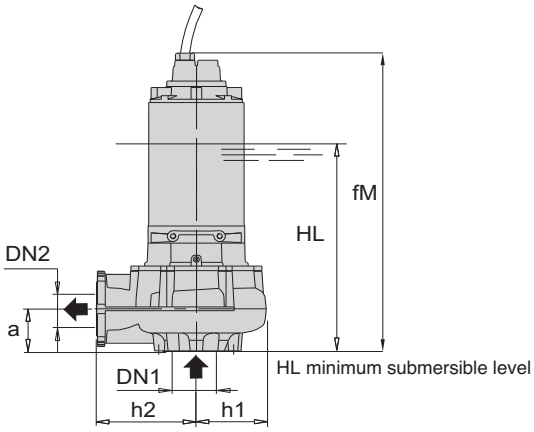

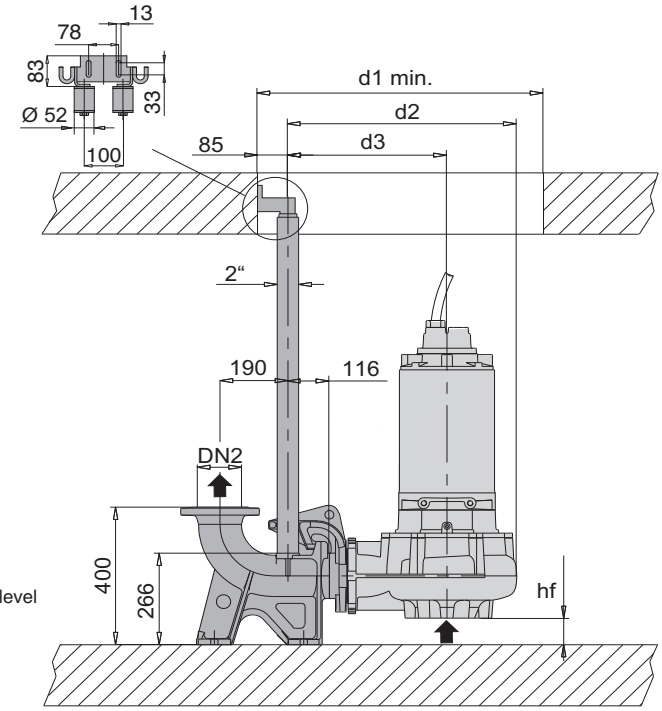

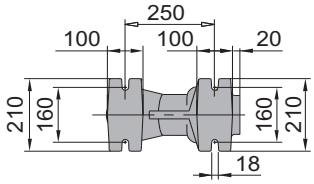

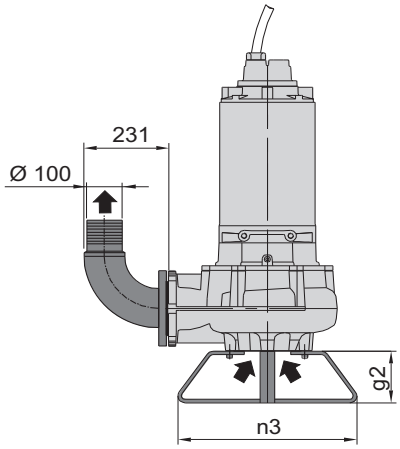

Version with foot and 90° elbow

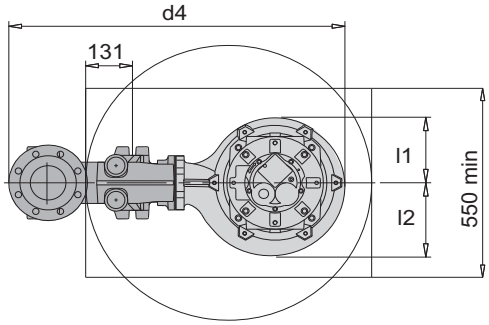

Version with duck foot coupling

TYPE	EN 1092-2 PN 10		Dimensions mm														Weight kg
	DN1	DN2	fM	HL	hf	a	l1	l2	d1	d2	d3	d4	h1	h2	n3	g2	
I-GMN 40-100D/A	125	100	845	478	127	73	168	184	750	628	441	928	187	275	500	150	222
I-GMN 40-100C/A																	
I-GMN 40-100B/A																	
I-GMN 40-100S/A	125	100	1269	570	127	73	193	193	800	628	441	928	187	275	500	150	360
I-GMN4 60-100B/A	125	100	852	526	54	147	189	212	800	640	445	940	195	279	500	150	170
I-GMN4 60-100A/A																	
I-GMN4 80-100B/A	125	100	921	570	53	147	189	212	800	640	445	940	195	279	500	150	220
I-GMN4 80-100A/A																	

CALPEDA ROMANIA - INFINITY PUMPS SRL
Tel: 0268.33.47.47 / 0722.244.944
vanzari@calpeda.ro | www.calpeda.ro

Dimensions and weights

I-GMN4 100-150

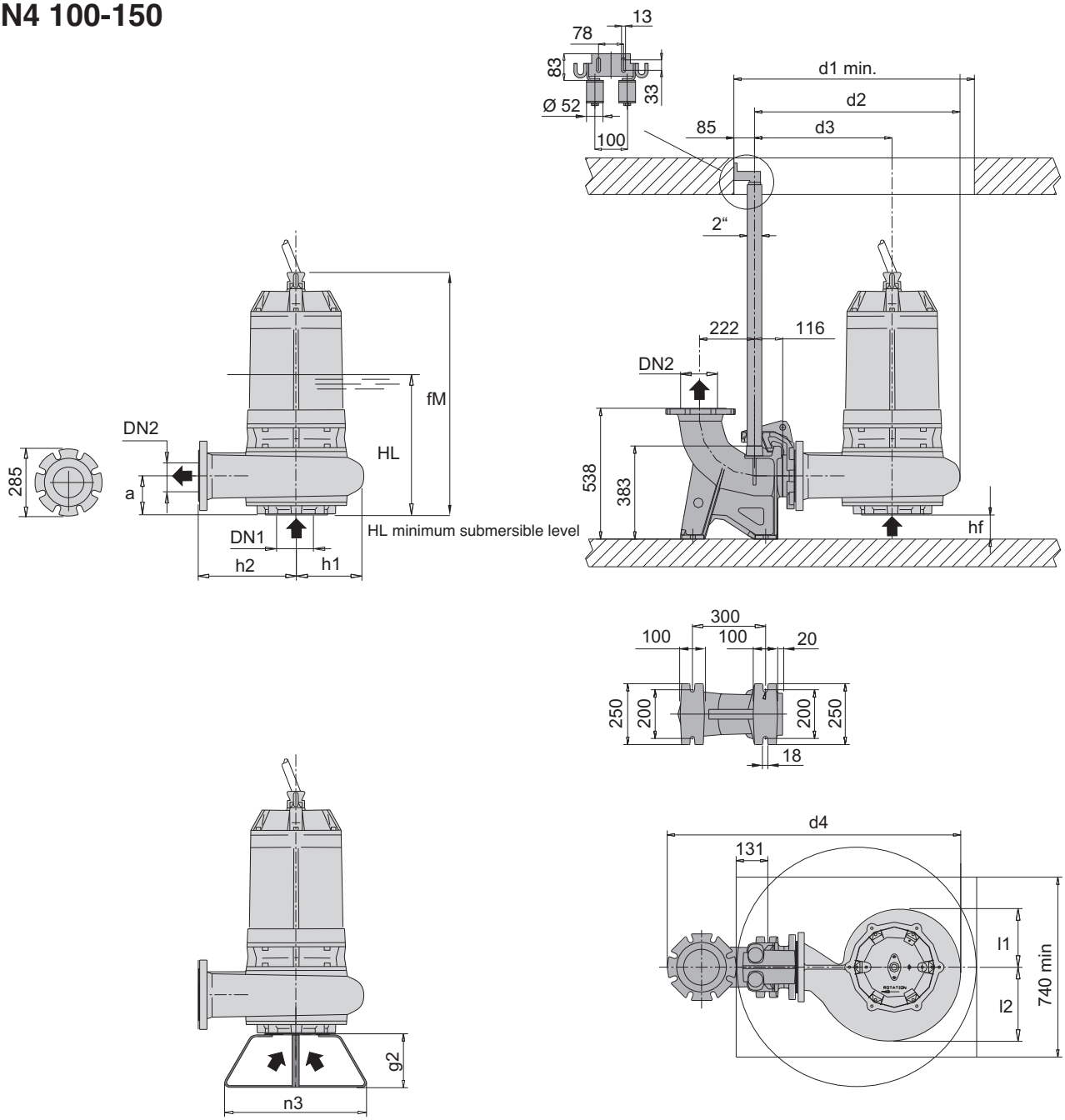

Version with foot

Version with duck foot coupling

TYPE	EN 1092-2 PN 10		Dimensions mm														Weight kg
	DN1	DN2	fM	HL	hf	a	l1	l2	d1	d2	d3	d4	h1	h2	n3	g2	
GMN4 100-150B/A	150	150	991	576	100	160	235	305	990	931	566	1208	280	400	600	225	370
GMN4 100-150A/A			1055	600													405

CALPEDA ROMANIA - INFINITY PUMPS SRL
Tel: 0268.33.47.47 / 0722.244.944
vanzari@calpeda.ro | www.calpeda.ro

B-GM Submersible pumps B 10

Construction

Submersible pumps, **B 10 bronze marine** version.
B-GMV with free-flow (vortex) impeller
B-GMC with single-channel impeller
B-GMN with channels impeller
Twin mechanical seal with oil chamber (lip-seal motor side up to 2,4 kW 2 poles).
Delivery connection DN 50-65-80

Applications

Suitable to pump industrial waste water in chemical, and process industries, agricultural and marine areas.
Solid passage from 30 to 50 mm

Operating conditions

Liquid temperature up to 40 °C.
Maximum immersion depth: 20 m (with suitable cable length).
Continuous duty (with pump immerged at minimum level).

Main materials

Pump casing, Motor casing, Motor cover: B 10 bronze marine
Impeller: stainless steel AISI 316
Motor shaft: stainless steel AISI 316L
Screws: stainless steel AISI 316
Mechanical seal motor side: graphite/ceramic/FPM (lip-seal made of nitrile up to 2,4 kW 2 poles).
Mechanical seal pump side: silicon carbide/silicon carbide/FPM

Motor

2 or 4 poles induction, 50Hz
Three-phase version: 400V ± 10%,
400/690V ± 10%
Insulation class: H
Protection degree: IP 68
N° of starting x hour: max 15 with regular intervals
Cable: H07RN-F, length 10 m
Other models: contact our sale office
Classification scheme IE3.

Coverage chart

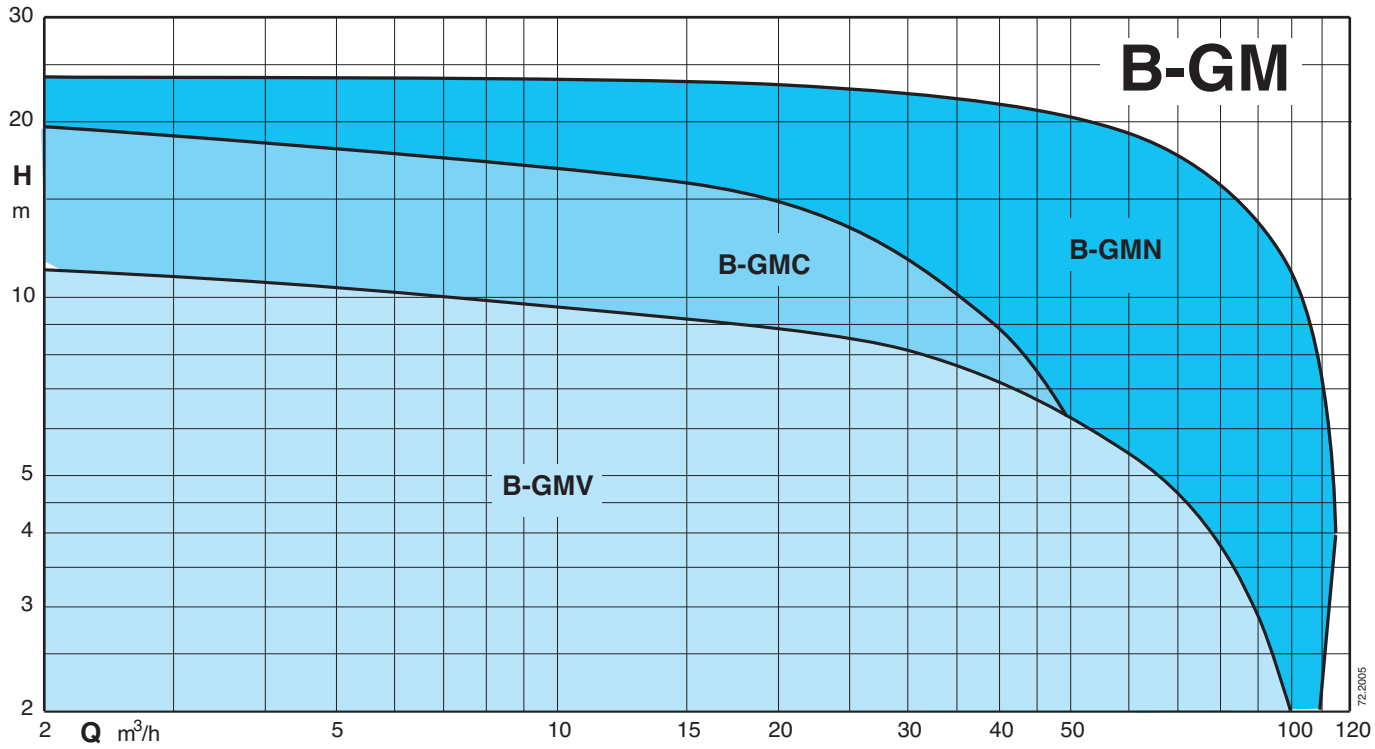

CALPEDA ROMANIA - INFINITY PUMPS SRL
Tel: 0268.33.47.47 / 0722.244.944
vanzari@calpeda.ro | www.calpeda.ro

B-GM Submersible pumps B 10

Technical data

TYPE	P_2 kW	I_N A	Power Supply	r.p.m.	Starting	DN mm	Free passage Ø mm	Thermal protector	Humidity probe	ATEX Eex
B-GMV 50-50C/A	1,8	3,5	3~ 400V	2850	D.O.L.	50	50	NO	NO	✔
B-GMV 50-50B/B	1,6	3,1	3~ 400V	2850	D.O.L.	50	50	NO	NO	✔
B-GMV 50-50A/B	2,4	4,5	3~ 400V	2850	D.O.L.	50	50	NO	NO	✔
B-GMV4 50-65C/A	1,1	2,4	3~ 400V	1450	D.O.L.	65	50	NO	NO	✔
B-GMV4 50-65B/A	1,4	2,7	3~ 400V	1450	D.O.L.	65	50	NO	NO	✔
B-GMV4 50-65A/A	1,6	3,1	3~ 400V	1450	D.O.L.	65	50	NO	NO	✔
B-GMV4 50-80B/A	2,3	4,4	3~ 400V	1450	D.O.L.	80	50	NO	NO	✔
B-GMV4 50-80A/A	2,8	3,4	3~ 400V	1450	D.O.L.	80	50	NO	NO	✔
B-GMC 40-65B/A	2,1	3,9	3~ 400V	2850	D.O.L.	65	40	NO	NO	✔
B-GMC 40-65A/A	2,8	5,2	3~ 400V	2850	D.O.L.	65	40	NO	NO	✔
B-GMN 30-65B/A	3,1	5,8	3~ 400V	2850	D.O.L.	65	30	NO	NO	✔
B-GMN 30-65A/A	3,6	6,6	3~ 400V	2850	D.O.L.	65	30	NO	NO	✔
B-GMN 30-80B/A	5	9,1	3~ 400/690V	2850	Y/Δ	80	30	●	●	✔
B-GMN 30-80A/A	6,5	11,8	3~ 400/690V	2850	Y/Δ	80	30	●	●	✔

P_2 Rated power output I_N Rated current ● Standard ✔ ATEX Eex Version on demand

CALPEDA ROMANIA - INFINITY PUMPS SRL
Tel: 0268.33.47.47 / 0722.244.944
vanzari@calpeda.ro | www.calpeda.ro

B-GM Submersible pumps B 10

Characteristic curves

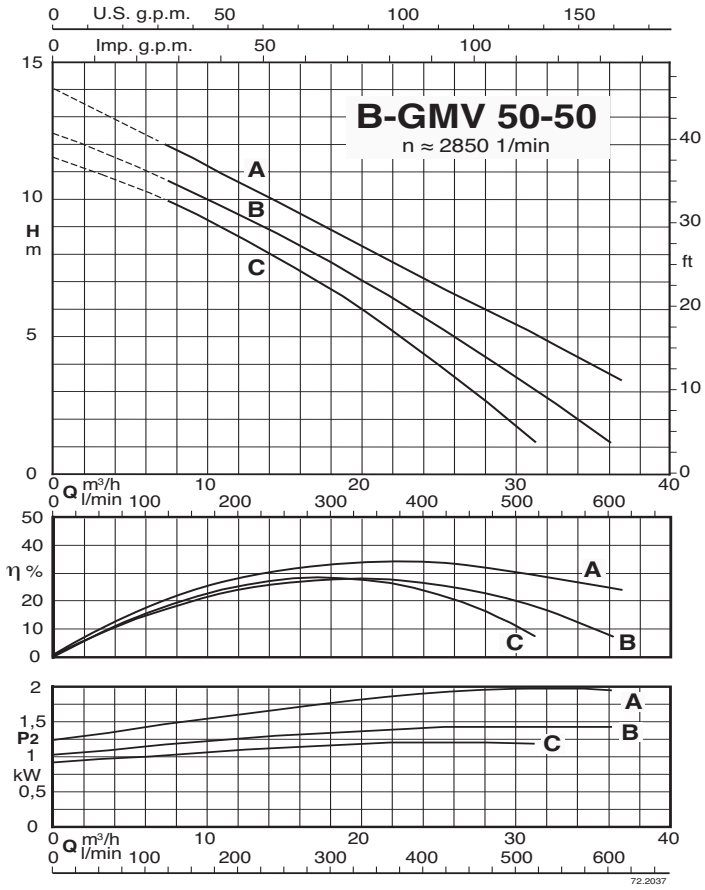

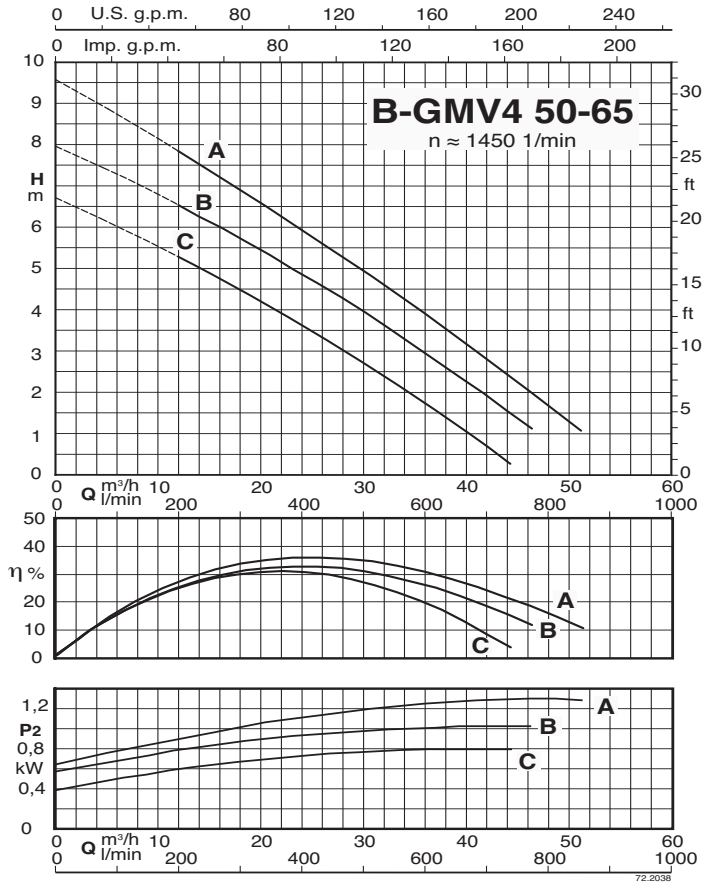

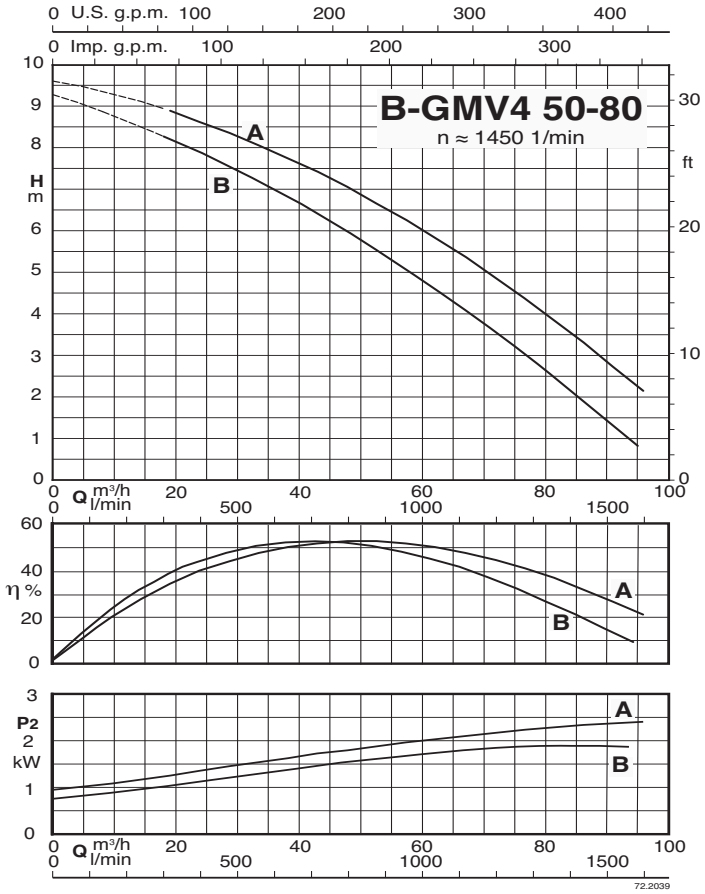

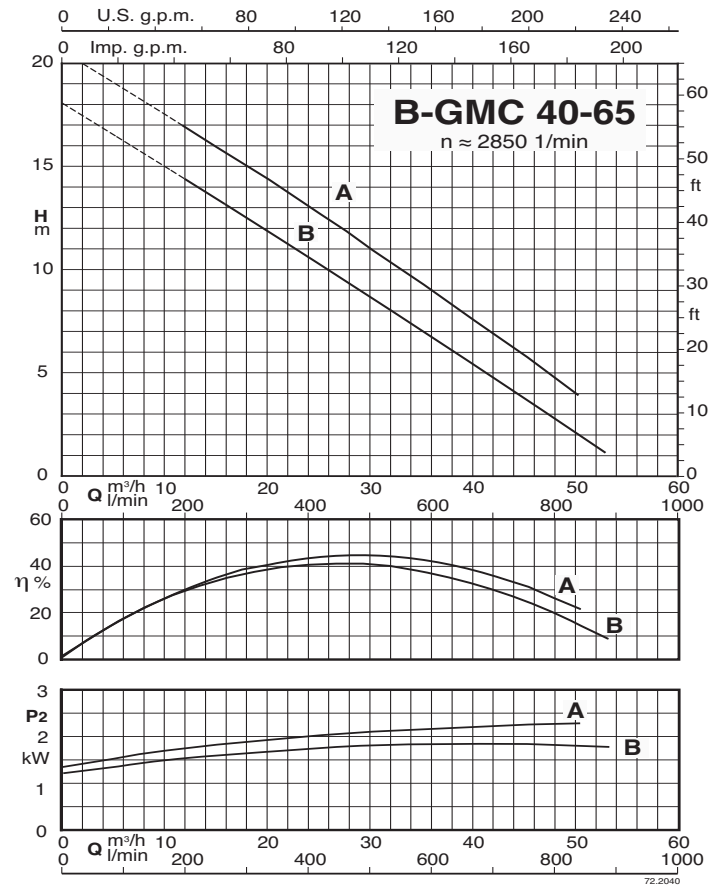

CALPEDA ROMANIA - INFINITY PUMPS SRL
Tel: 0268.33.47.47 / 0722.244.944
vanzari@calpeda.ro | www.calpeda.ro

B-GM Submersible pumps B 10

Characteristic curves

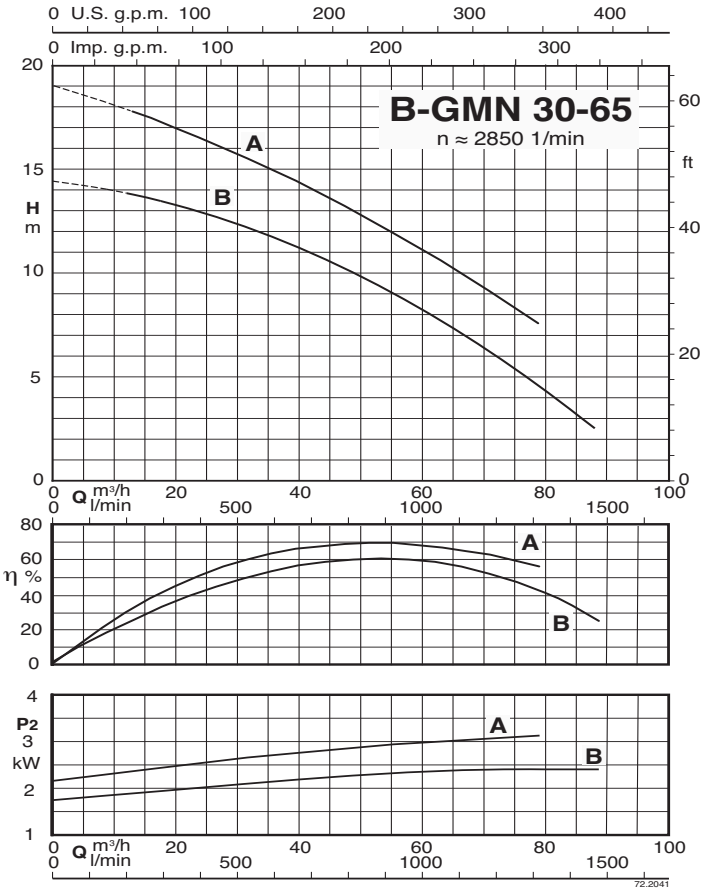

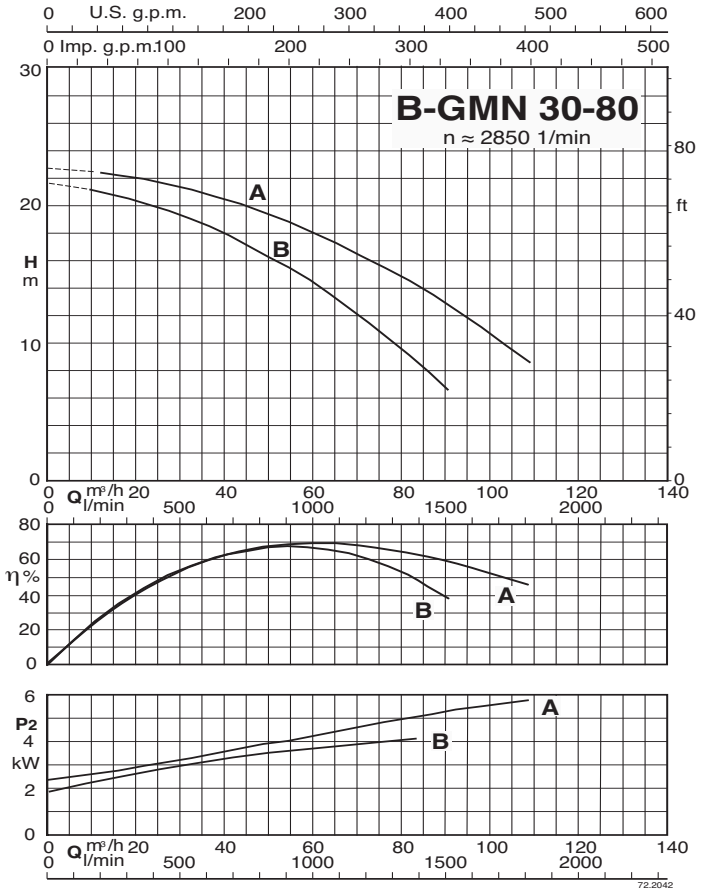

CALPEDA ROMANIA - INFINITY PUMPS SRL
Tel: 0268.33.47.47 / 0722.244.944
vanzari@calpeda.ro | www.calpeda.ro

Dimensions and weights

B-GMV 50-50

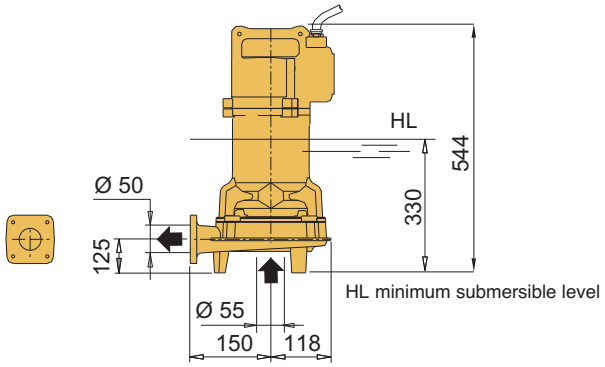

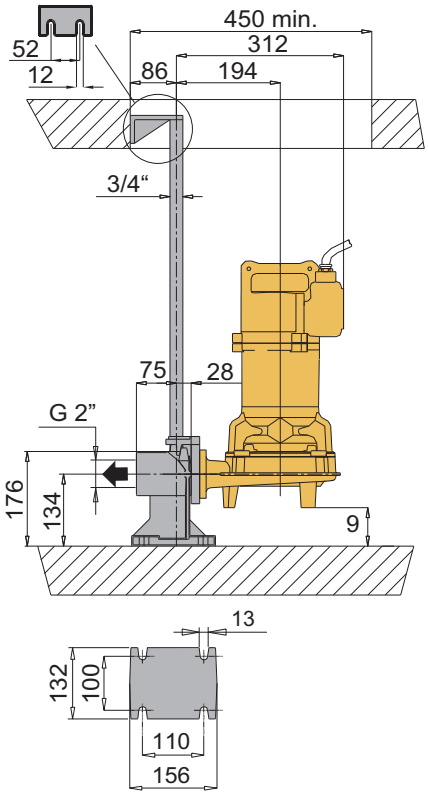

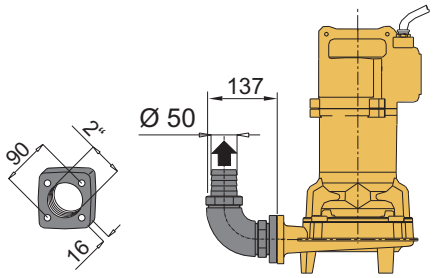

Version with threaded flange and 90° elbow

Version with duck foot coupling

TYPE	Weight kg
B-GMV 50-50C/A	48
B-GMV 50-50B/B	
B-GMV 50-50A/B	

CALPEDA ROMANIA - INFINITY PUMPS SRL
Tel: 0268.33.47.47 / 0722.244.944
vanzari@calpeda.ro | www.calpeda.ro

Dimensions and weights

B-GMV4 50-65
B-GMC 40-65

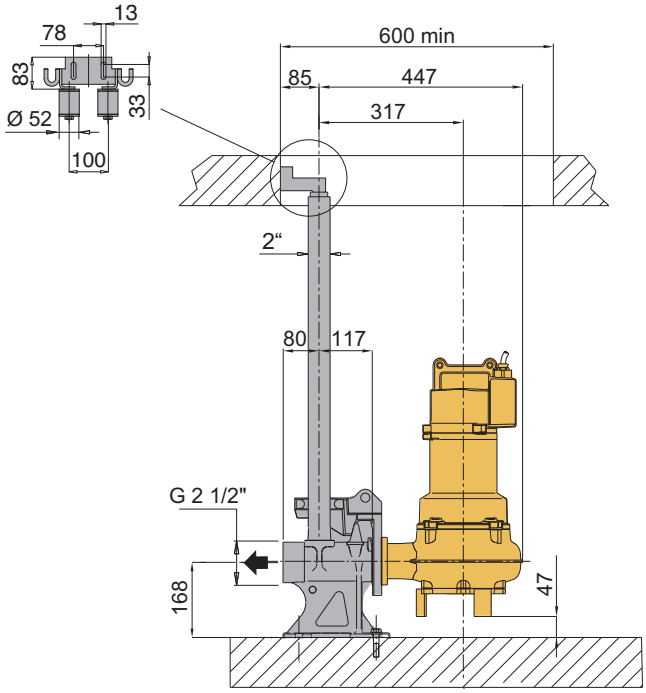

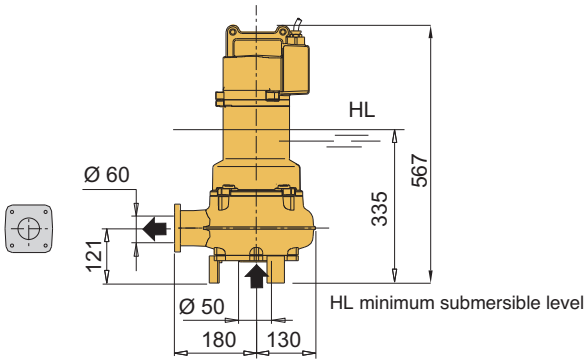

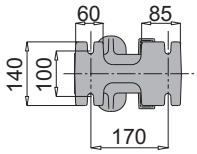

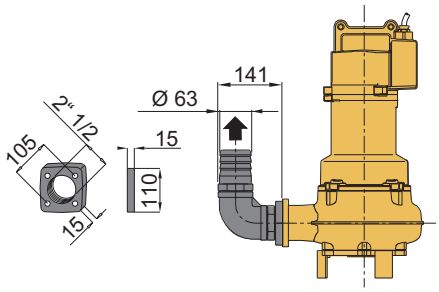

Version with threaded flange and 90° elbow

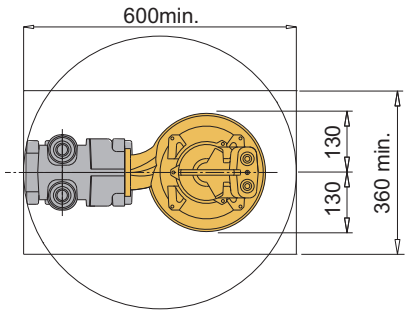

Version with duck foot coupling

TYPE	Weight kg
B-GMV4 50-65C/A	48
B-GMV4 50-65B/A	
B-GMV4 50-65A/A	
B-GMC 40-65B/A	50
B-GMC 40-65A/A	

CALPEDA ROMANIA - INFINITY PUMPS SRL
Tel: 0268.33.47.47 / 0722.244.944
vanzari@calpeda.ro | www.calpeda.ro

Dimensions and weights

B-GMN 30-65

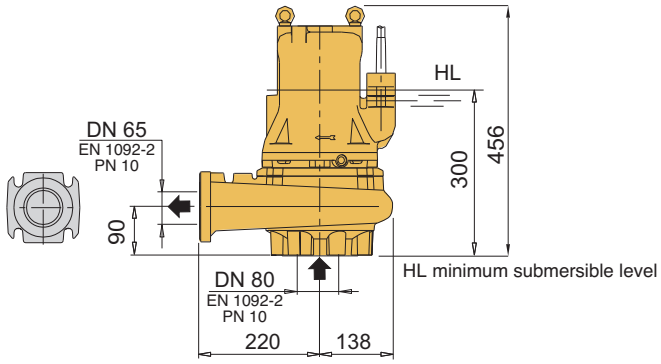

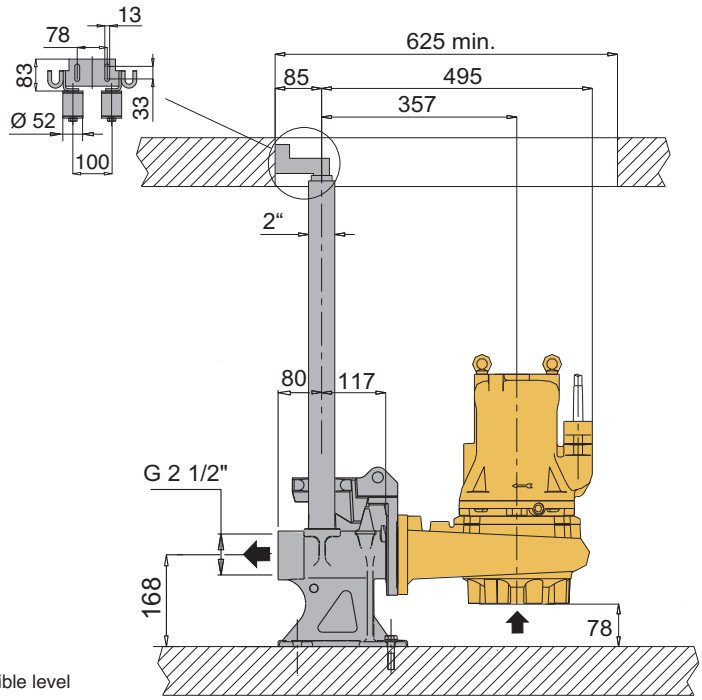

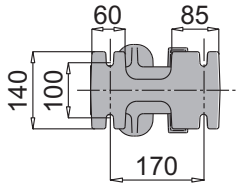

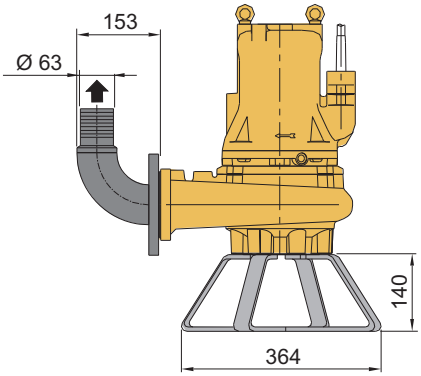

Version with foot and 90° elbow

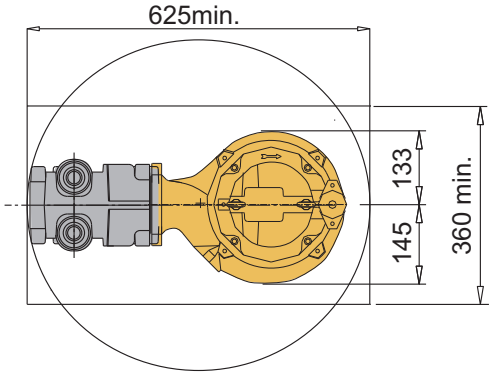

Version with duck foot coupling

TYPE	Weight kg
B-GMN 30-65B/A	65
B-GMN 30-65A/A	

CALPEDA ROMANIA - INFINITY PUMPS SRL
Tel: 0268.33.47.47 / 0722.244.944
vanzari@calpeda.ro | www.calpeda.ro

Dimensions and weights

B-GMV4 50-80
B-GMN 30-80

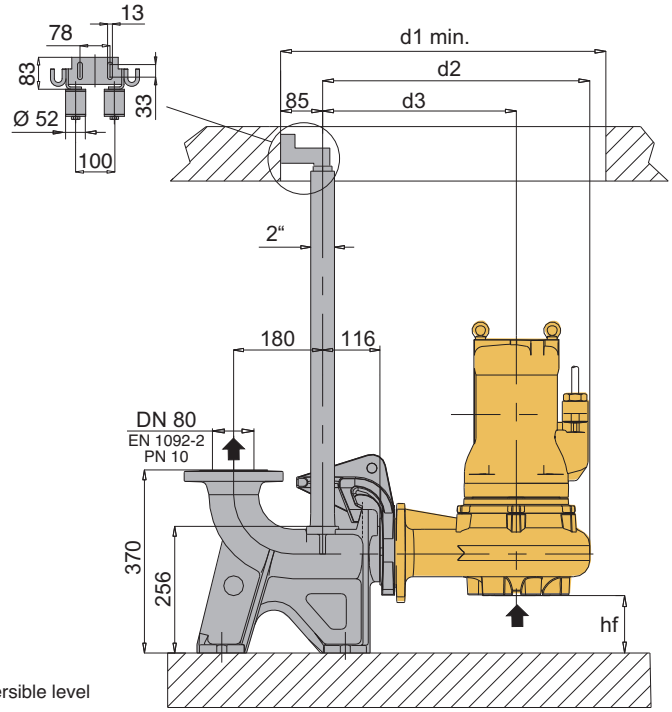

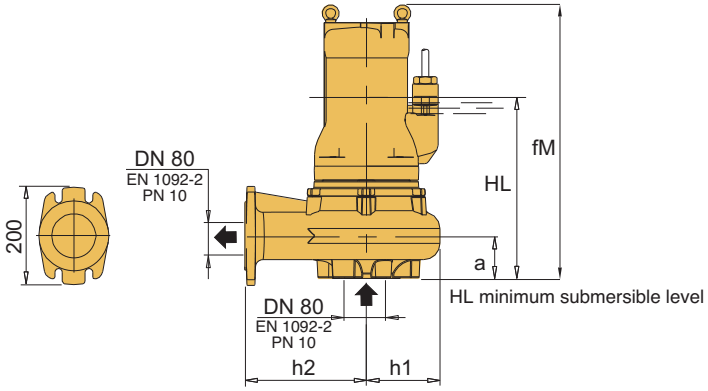

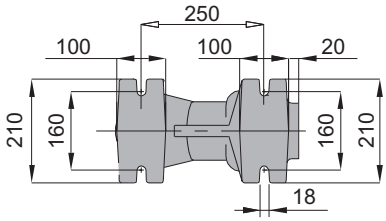

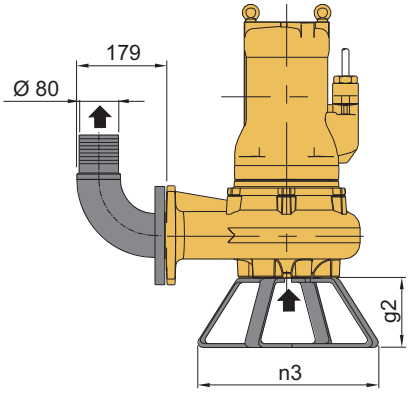

Version with foot and 90° elbow

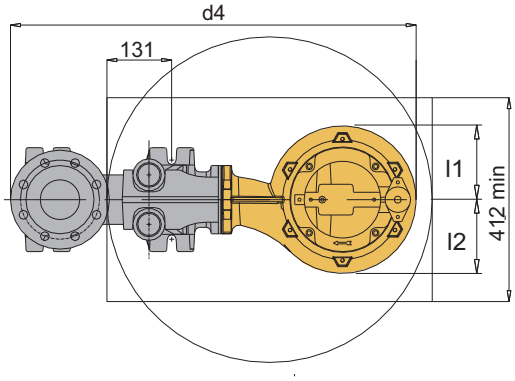

Version with duck foot coupling

TYPE	EN 1092-2 PN 10		Dimensions mm														Weight kg
	DN1	DN2	fM	HL	hf	a	l1	l2	d1	d2	d3	d4	h1	h2	n3	g2	
B-GMV4 50-80B/A B-GMV4 50-80A/A	80	80	519	363	84	116	136	157	658	511	366	791	145	220	370	140	73
B-GMN 30-80B/A B-GMN 30-80A/A	80	80	515	330	110	90	133	145	700	511	366	791	145	220	370	140	90

CALPEDA ROMANIA - INFINITY PUMPS SRL
Tel: 0268.33.47.47 / 0722.244.944
vanzari@calpeda.ro | www.calpeda.ro

Features

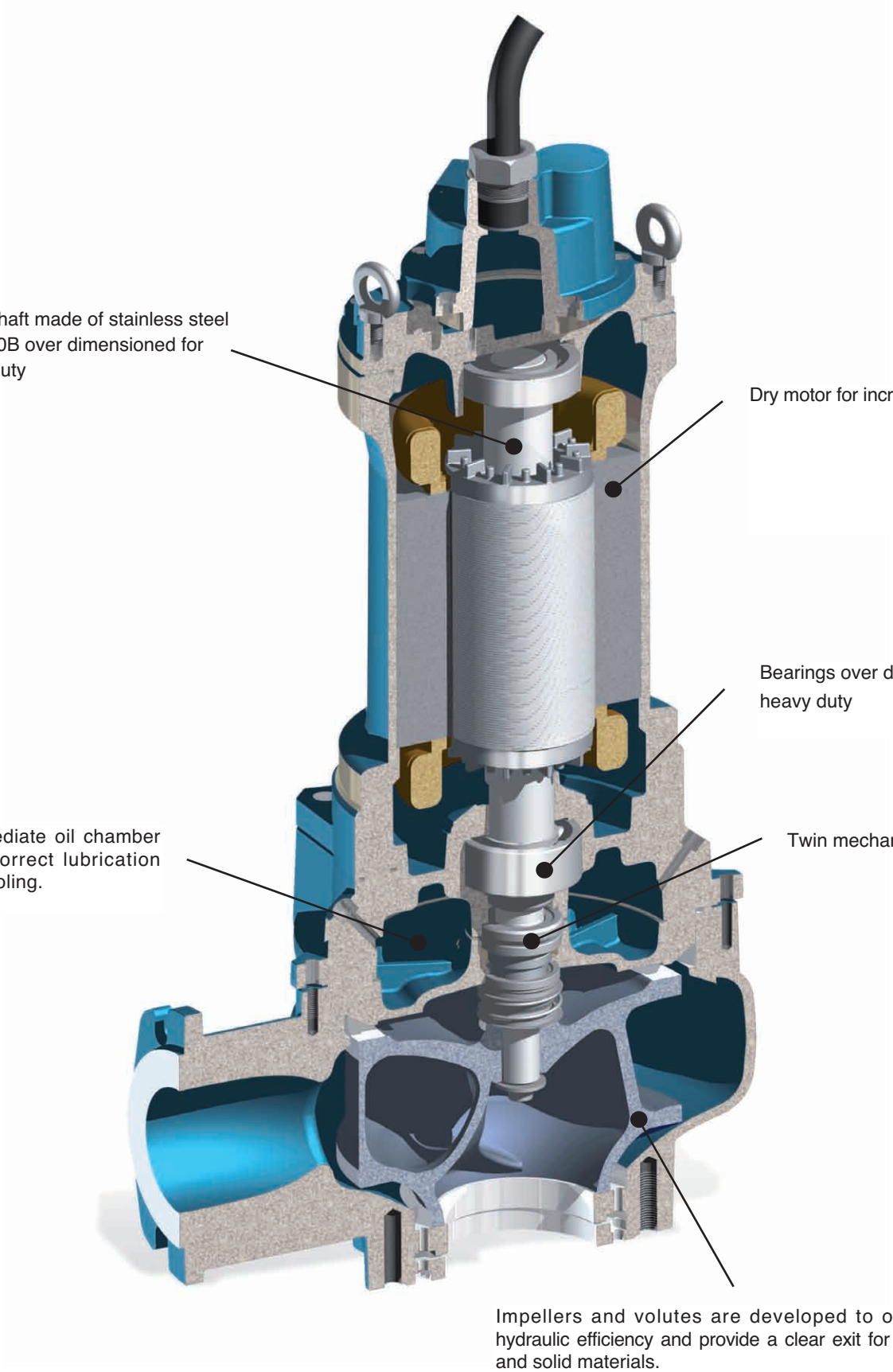

CALPEDA ROMANIA - INFINITY PUMPS SRL
Tel: 0268.33.47.47 / 0722.244.944
vanzari@calpeda.ro | www.calpeda.ro

GM

Submersible Pumps

THE IMPELLERS

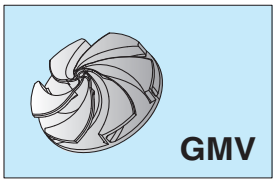

Vortex impeller suitable for pumping liquids containing large solids and/or fibrous materials.
Applications: urban sewerage systems, animal breeding plants.

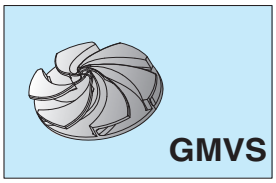

Sand Vortex Water Impeller in Polyurethane with a stainless steel core.
Applications: in plants with an high sand presence, in marble work companies, in the ceramic industry, crystals machining or industrial processes where there's presence of abrasives liquids.

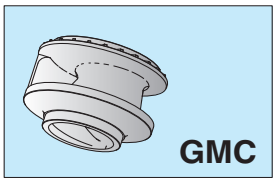

Single channel impeller, for liquids containing fibrous materials and/or suspended solids.
Applications: purification plants, tanneries, animal breeding plants.

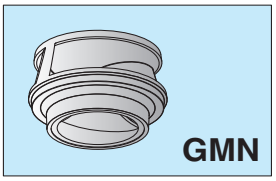

Closed multi-channel impeller, for clean liquids or light solids without filamentous materials.
Applications: large drainage systems, purification plants.

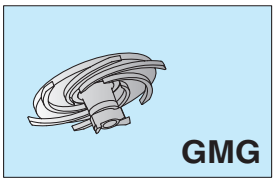

Multi-blade suction impeller with grinder constructed in stainless steel AISI 440, particularly suitable as a grinder for paper or textile materials.
Applications: clearance of waste waters originating from service stations, residential communities, camping sites, etc..

THE STANDARD INSTALLATIONS

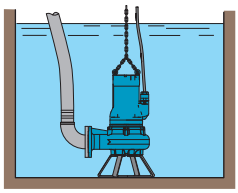

A Mobile and emergency installation with x-foot support

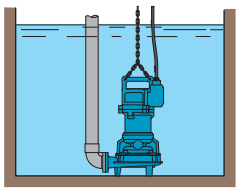

B Free installation and threated elbow

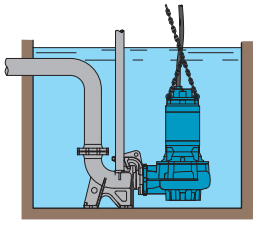

C Fixed installation with automatic coupling feet and guide rails.

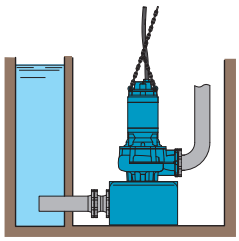

D Dry pit installation, with x-foot rest and suction bend.
Pump equipped with cooling jacket.

CALPEDA ROMANIA - INFINITY PUMPS SRL
Tel: 0268.33.47.47 / 0722.244.944
vanzari@calpeda.ro | www.calpeda.ro

Installation with duck foot coupling

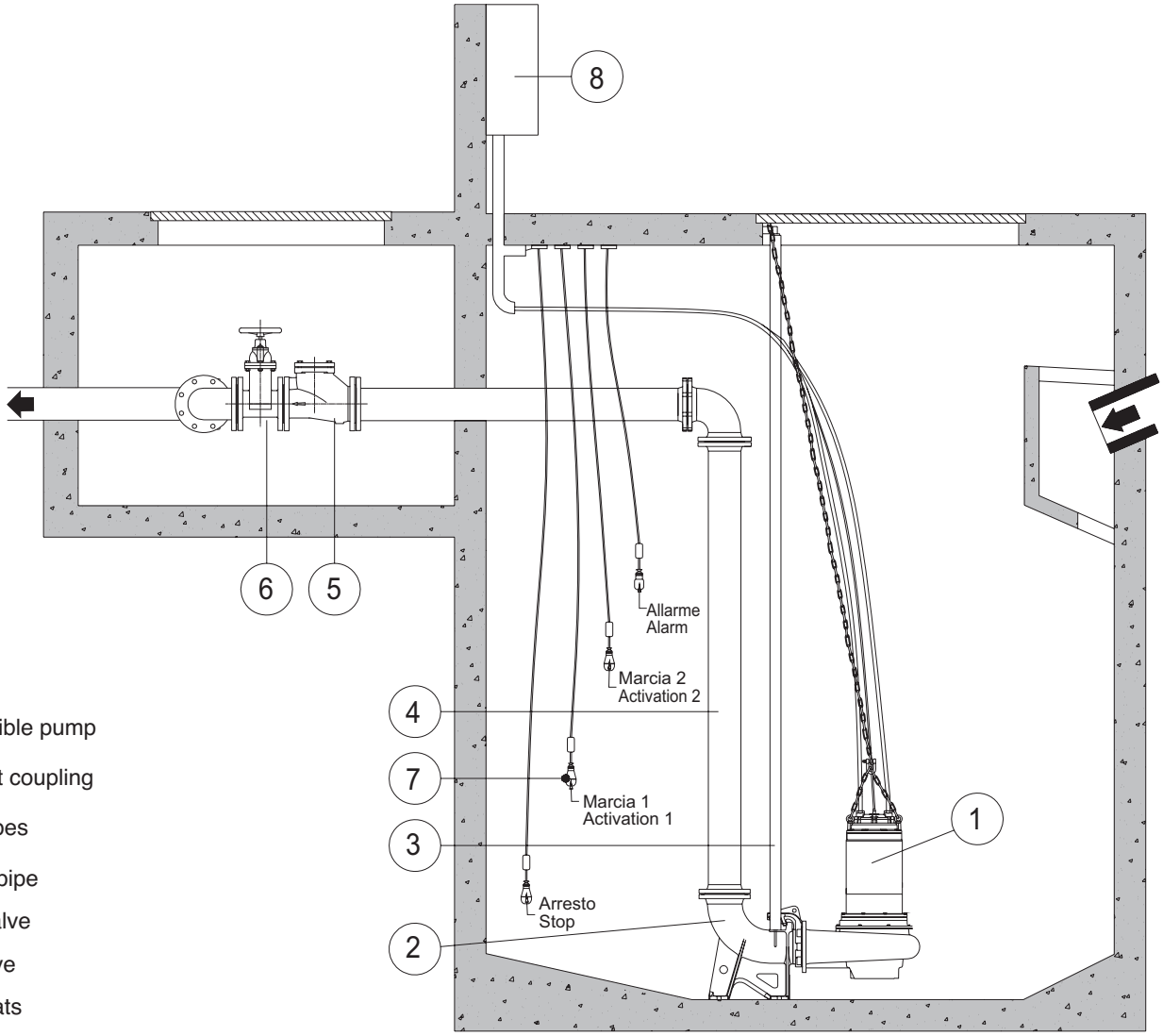

1 Submersible pump
2 Duck foot coupling
3 Guide pipes
4 Delivery pipe
5 Check valve
6 Gate valve
7 Level floats
8 Control box

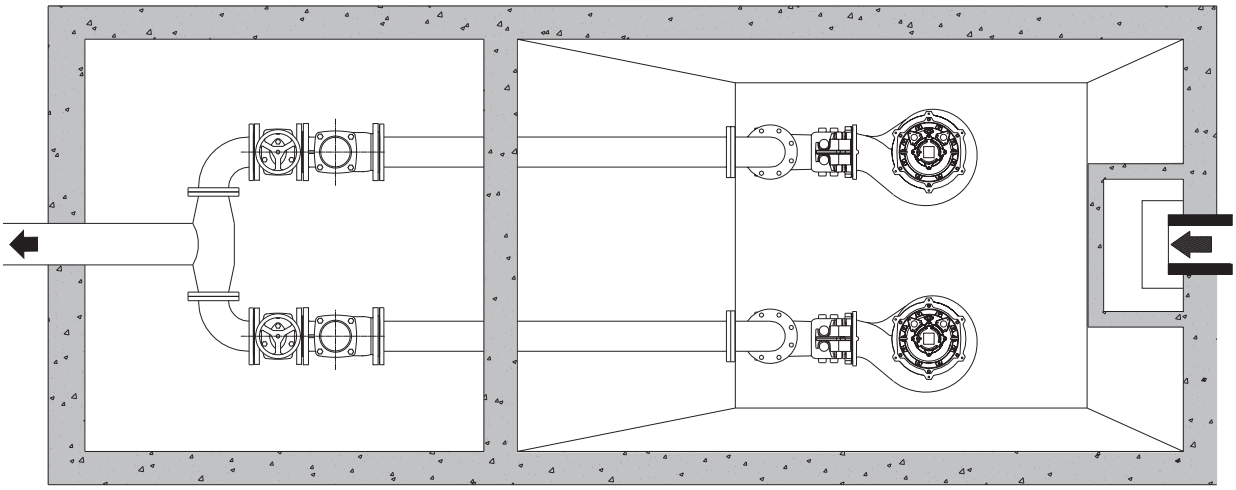

CALPEDA ROMANIA - INFINITY PUMPS SRL
Tel: 0268.33.47.47 / 0722.244.944
vanzari@calpeda.ro | www.calpeda.ro

Accessories

Non-return ball valves

Construction

Non-return self-cleaning ball valves, suitable for dirty and viscous liquids, sewage water.

Operating conditions

Working temperature from -10°C up to +80°C
Rated pressure: 10 bar
Vertical or horizontal installation

Materials

Valve body: Cast iron EN-GJL-250
Cover: Cast iron EN-GJL-250
Ball: Resin for threaded VNRP
Resin + nitril for VNRP DN 50-100
Cast iron + nitril for VNRP DN 125-250
Screws: SS AISI 304
Joint: nitril

Dimensions

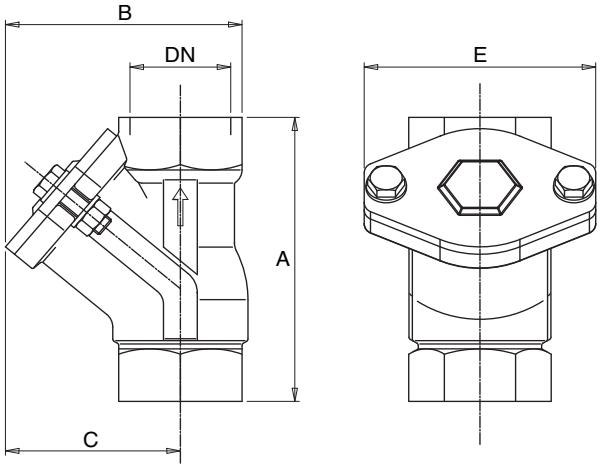

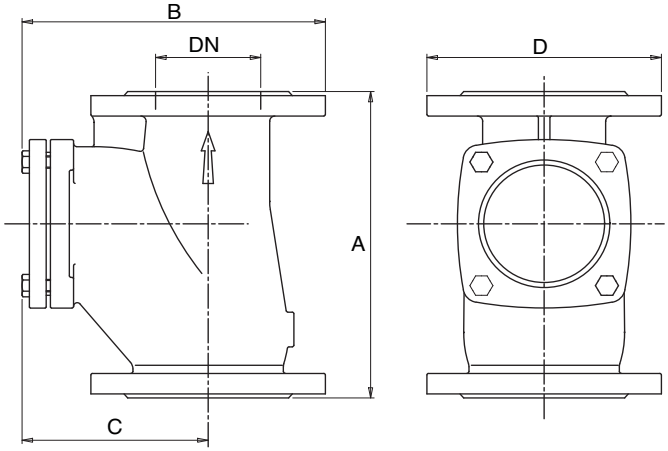

TYPE	DN mm	mm				Weight kg
		A	B	C	E	
VNRP 1 1/4	1“ 1/4	132	111	83	108	1,9
VNRP 1 1/2	1“ 1/2	145	122	90	120	2,4
VNRP 2	2”	173	145	110	135	3,6
VNRP 2 1/2	2“ 1/2	200	175	130	155	6,5

TYPE	DN mm	mm				Weight kg
		A	B	C	D	
VNRP 50	50	182	192	120	165	9,5
VNRP 65	65	204	215	124	185	14
VNRP 80	80	260	250	150	200	19,5
VNRP 100	100	300	290	180	220	23,5
VNRP 125	125	350	340	215	250	36
VNRP 150	150	400	388	245	285	38,5
VNRP 200	200	500	480	310	340	69

CALPEDA ROMANIA - INFINITY PUMPS SRL
Tel: 0268.33.47.47 / 0722.244.944
vanzari@calpeda.ro | www.calpeda.ro

GEOTRIT

Macerating pumping system

Construction

This macerating pumping system has been designed to pump away the waste water from a WC and a washbasin.
It is possibile to use it to add a new cloakroom, washroom or toilet, in a basement or loft conversion or anywhere conventional large bore pipework is impractical.
The GEOTRIT macerating system is installed in a case specifically designed for horizontal outlet spigots.
Installed and used correctly, this unit will give consistent and reliable service.
The system has a grinder pump, clapet valve and carbon filter.
GEOTRIT is provided with flexible sleeves, elbow, metal hose clips.

Operating conditions

Voltage: 220-240 V
Frequency: 50 Hz
Degree of protection: IP44
Maximum power rating: 400 W
Maximum current consumption: 1,9 A
Vertical pumping: max. 4 m
Liquid temperature up to 35 °C

Application

GEOTRIT takes waste from :

WC

Washbasin

Characteristic curve

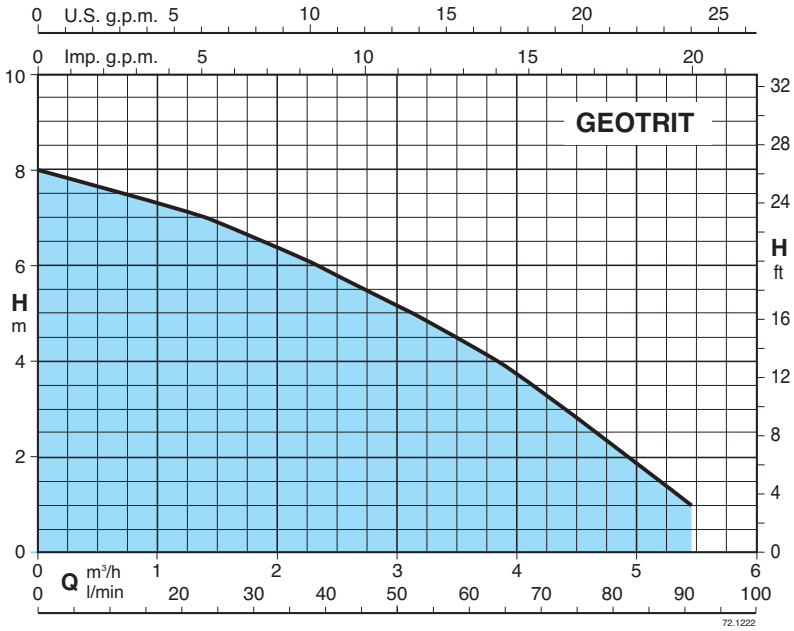

Q m³/h	0	1,2	2,4	3,6	4,8	5,4
Q l/min	0	20	40	60	80	90
H m	8	7,1	5,9	4,3	2,2	1,1

CALPEDA ROMANIA - INFINITY PUMPS SRL
Tel: 0268.33.47.47 / 0722.244.944
vanzari@calpeda.ro | www.calpeda.ro

GEOTRIT

Macerating pumping system

Installation

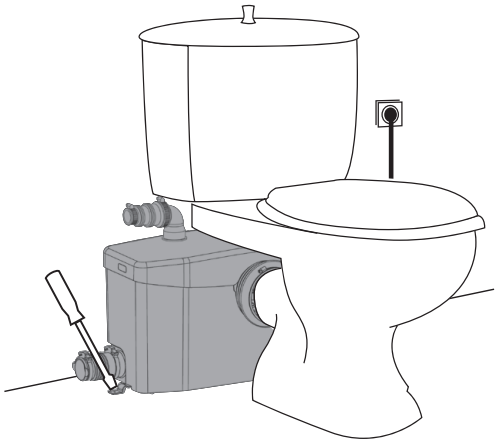

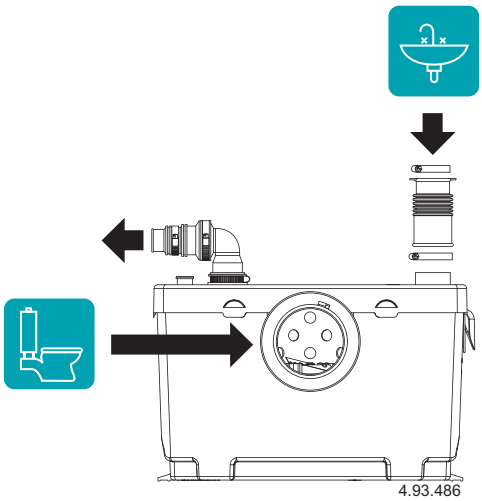

Performance

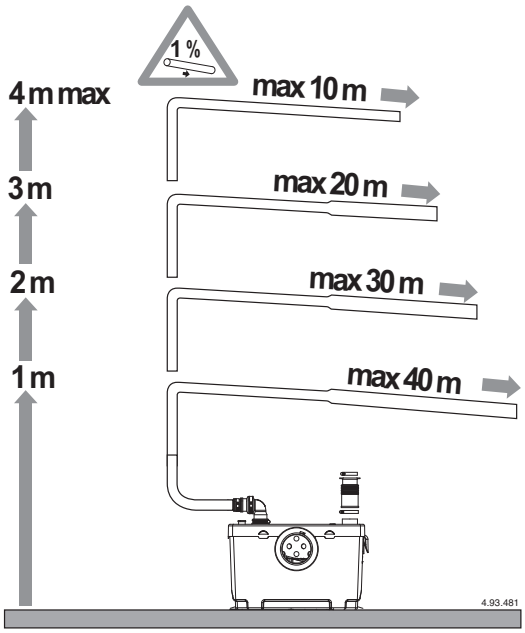

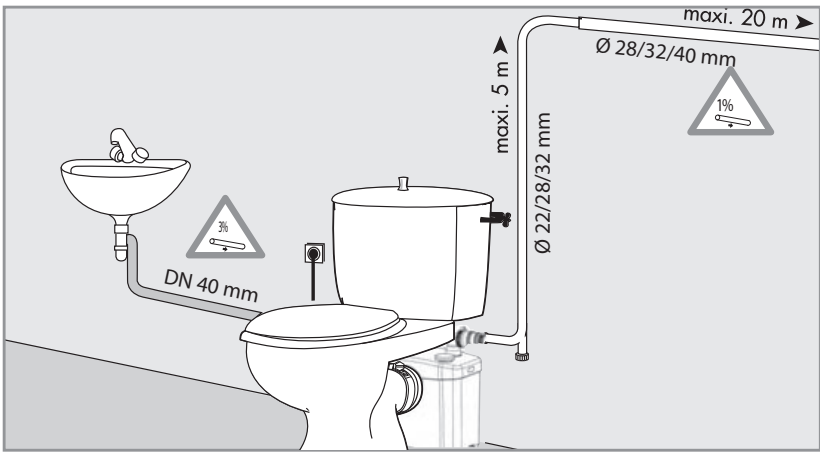

Dimensions and weights

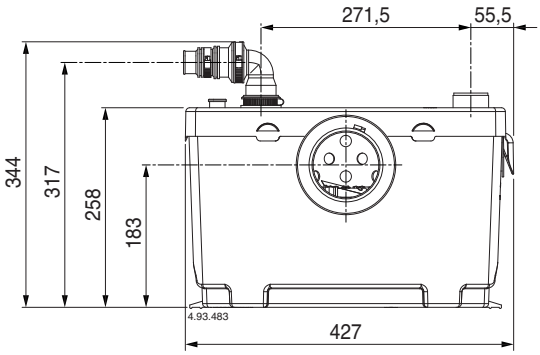

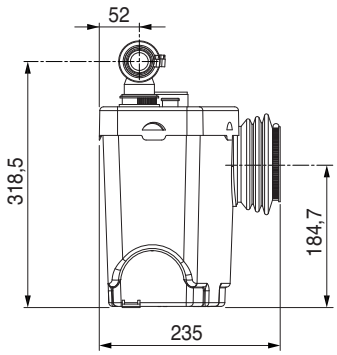

peso: kg 6,6

CALPEDA ROMANIA - INFINITY PUMPS SRL
Tel: 0268.33.47.47 / 0722.244.944
vanzari@calpeda.ro | www.calpeda.ro

GEOCOMP

Macerating pumping system

Construction

This macerating pumping system has been designed to pump away the waste water from WC, washbasin, bidet and shower.
It is possible to install a complete bathroom in a basement conversion or loft extension.
The GEOCOMP macerating system is installed in a case specifically designed for horizontal outlet spigots.
Installed and used correctly, this unit will give consistent and reliable service.
The system has a grinder pump, clapet valve and carbon filter.
GEOCOMP is provided with flexible sleeves, elbow, metal hose clips.

Operating conditions

Voltage: 220-240 V
Frequency: 50 Hz
Degree of protection: IP44
Maximum power rating: 400 W
Maximum current consumption: 1,9 A
Vertical pumping: max. 4 m
Liquid temperature up to 35 °C

Application

GEOCOMP takes waste from :

WC | Washbasin | Bidet | Tube | Shower

Characteristic curve

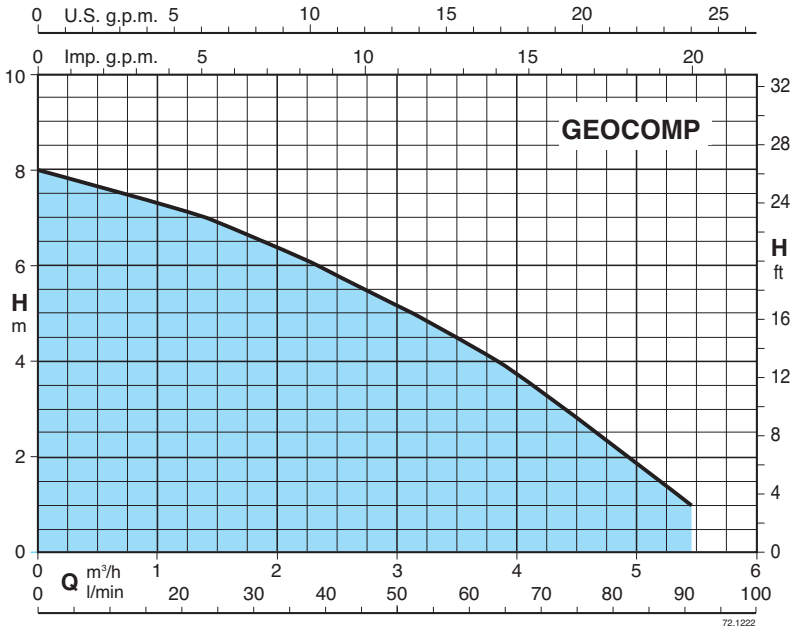

Q m³/h	0	1,2	2,4	3,6	4,8	5,4
Q l/min	0	20	40	60	80	90
H m	8	7,1	5,9	4,3	2,2	1,1

CALPEDA ROMANIA - INFINITY PUMPS SRL
Tel: 0268.33.47.47 / 0722.244.944
vanzari@calpeda.ro | www.calpeda.ro

GEOCOMP

Macerating pumping system

Installation

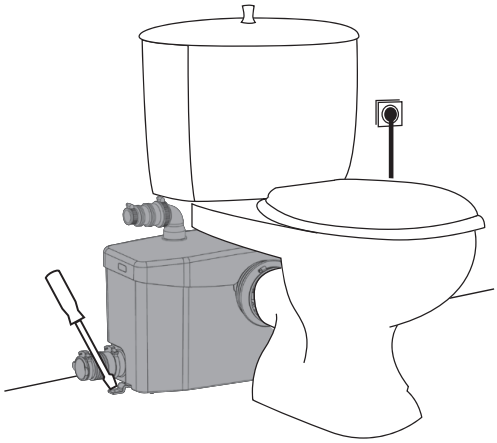

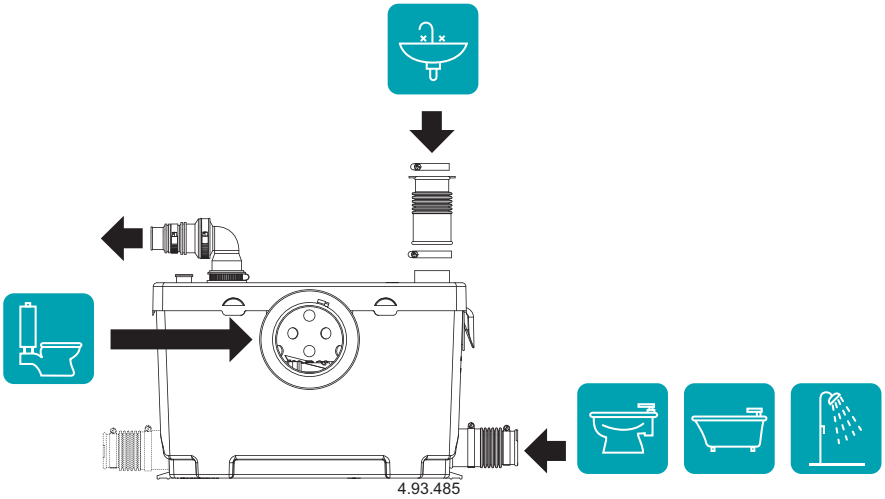

Performance

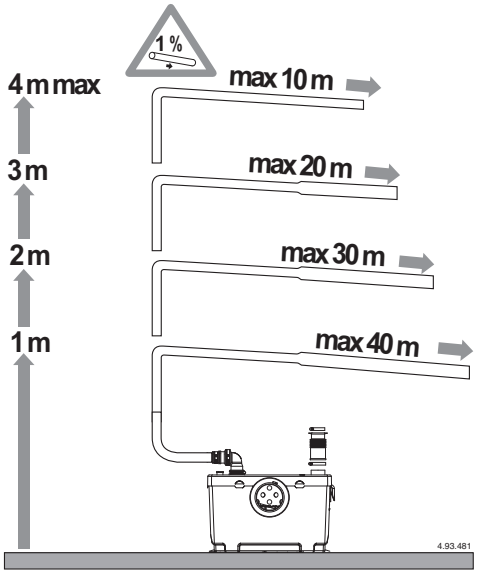

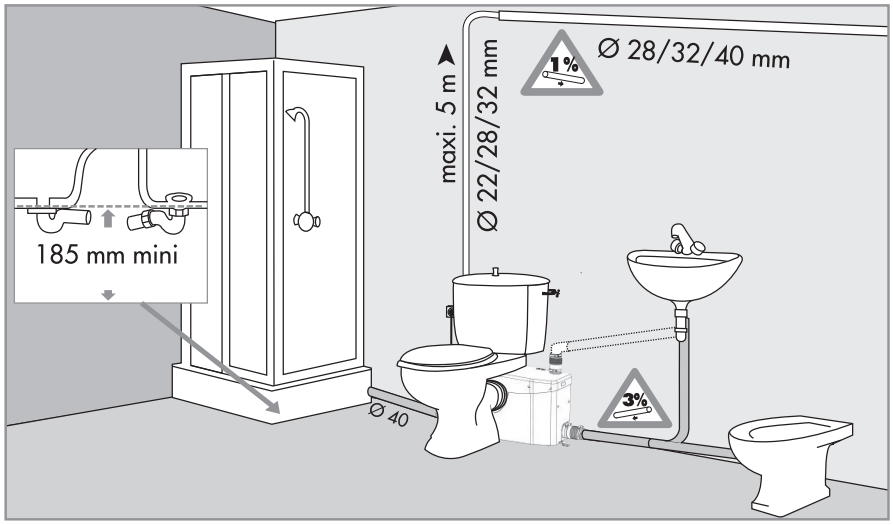

Dimensions and weight

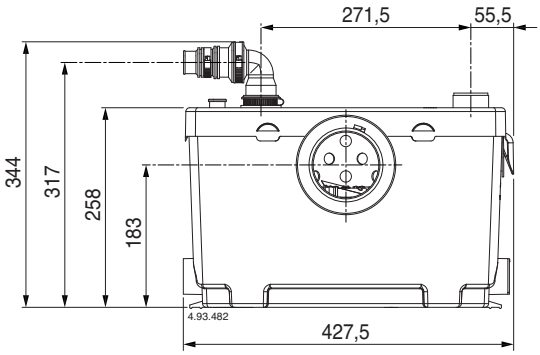

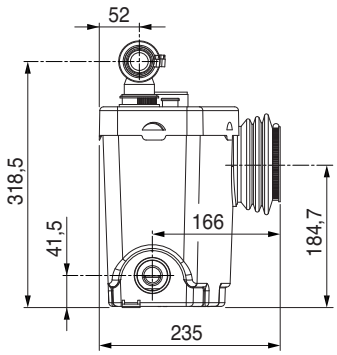

weight: kg 6,8

CALPEDA ROMANIA - INFINITY PUMPS SRL
Tel: 0268.33.47.47 / 0722.244.944
vanzari@calpeda.ro | www.calpeda.ro

GEOCLEAN

Lifting station for clear water

Construction

The system is design to handle the evacuation water from a domestic kitchen sink, dishwasher and washing machine – all working at the same time if required.
GEOCLEAN makes the addition of a domestic kitchen or utility room easy even when below or distant from a drain.
The system has a clapet valve and it cannot be used with waste waters.
GEOCLEAN is provided with flexible sleeves, elbow, metal hose clips, plugs.

Operating conditions

Voltage: 220-240 V
Frequency: 50 Hz
Degree of protection: IP44
Maximum power rating: 400 W
Maximum current consuption: 1,9 A
Vertical pumping: max. 5 m
Liquid temperature up to 60 °C

Application

GEOCLEAN takes waste from :

Washbasin | Bidet | Tube | Shower | Kitchen sink | Dishwasher | Washing machine

Characteristic curve

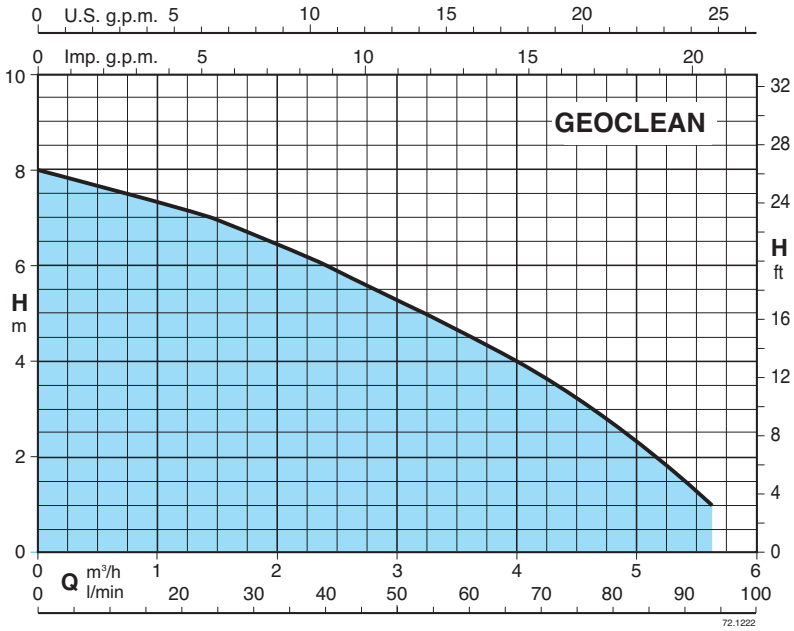

Q m³/h	0	1,2	2,4	3,6	4,8	5,6
Q l/min	0	20	40	60	80	93
H m	8	7,1	5,9	4,5	2,7	1

CALPEDA ROMANIA - INFINITY PUMPS SRL
Tel: 0268.33.47.47 / 0722.244.944
vanzari@calpeda.ro | www.calpeda.ro

GEOCLEAN

Lifting station for clear water

Installation

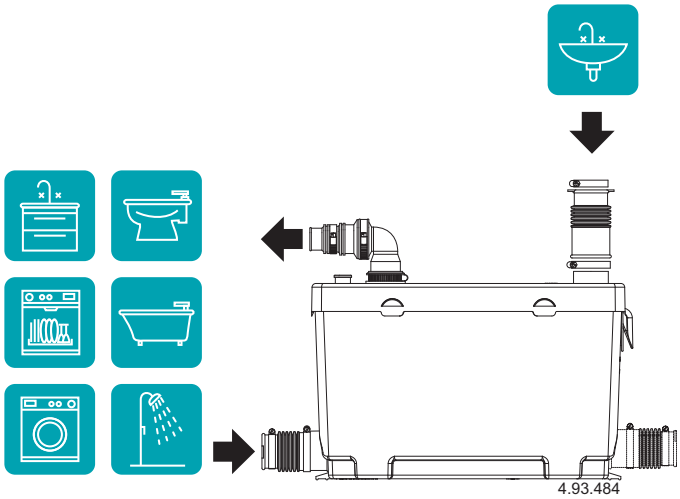

Performance

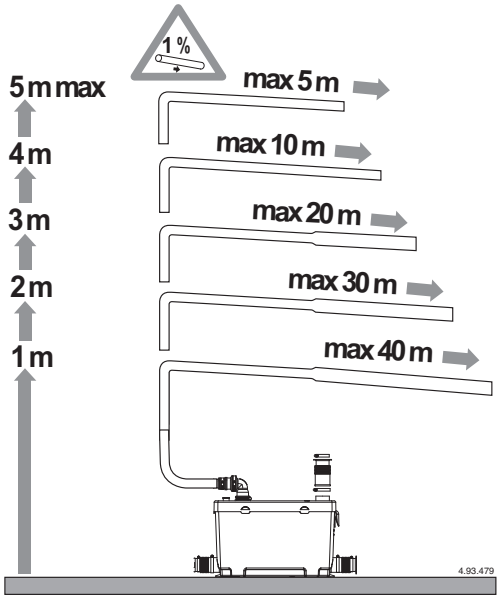

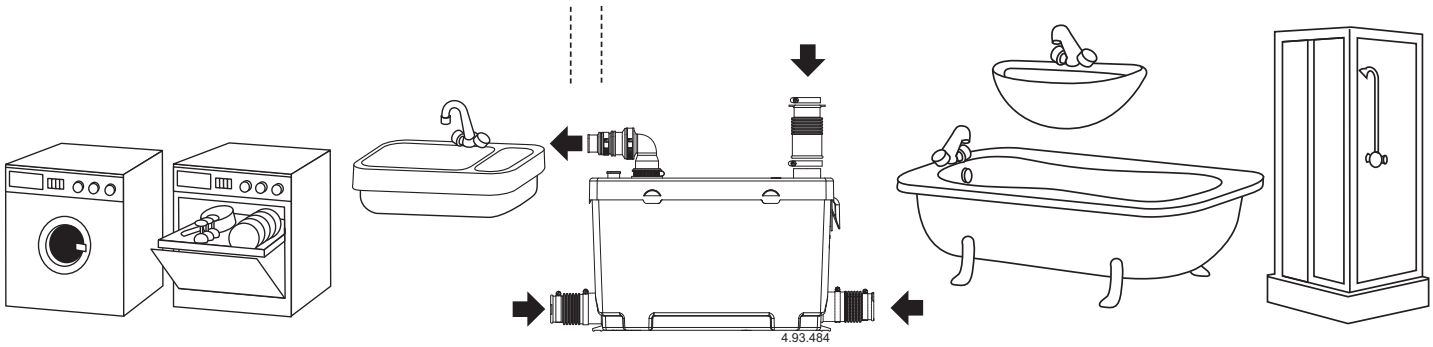

Dimensions and weight

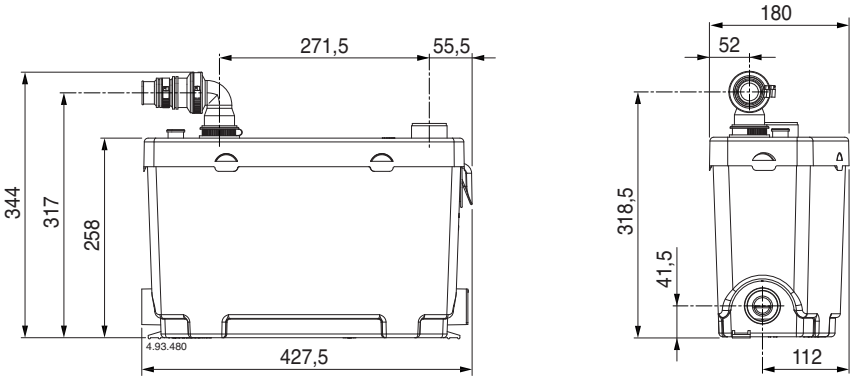

weight: kg 6,4

CALPEDA ROMANIA - INFINITY PUMPS SRL
Tel: 0268.33.47.47 / 0722.244.944
vanzari@calpeda.ro | www.calpeda.ro

GEO

Automatic waste water collecting and lifting station

Construction

Medium-density polyethylene tank, resistant to corrosion, with minimum overall dimensions.

- **GEO 40** single tank with 40 liters nominal capacity for the installation of a GXRM type.
- **GEO 230** single tank with 230 liters nominal capacity for the installation of an electropump type GM 10, GQ, GX or GM series.
- **GEO 500** double tank with 500 liters nominal capacity for the installation of two electropumps type GM 10, GQ, GX or GM series.

Pipe kit for electropump connection.
Two possible installation, at ground level or underground.
For underground installation, extentions can be used (maximum two extentions).
Easy pump access through a cover fixed with screws.

Applications

Automatic waste water collecting and lifting stations, to handle domestic, civil and industrial waste water.
For collecting and lifting clean waste water and rain water.
For flood drainage.

Designation

GEO 40-GXRM 9

Series
Nominal tank capacity
Pump type

GEO 230-GXVM 40-7

Series
Nominal tank capacity
Pump type

GEO 500-2 GXVM 40-7

Series
Nominal tank capacity
Nr of pumps
Pump type

Installation examples

GEO 40-GXR

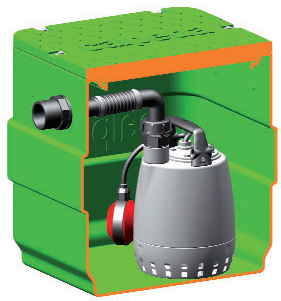

GEO 230-GX..

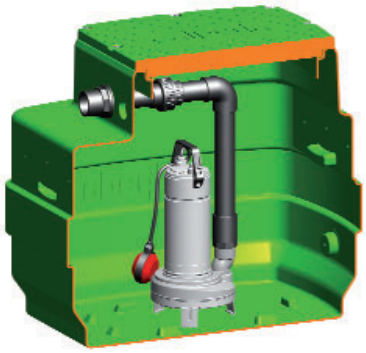

GEO 500-2GM..

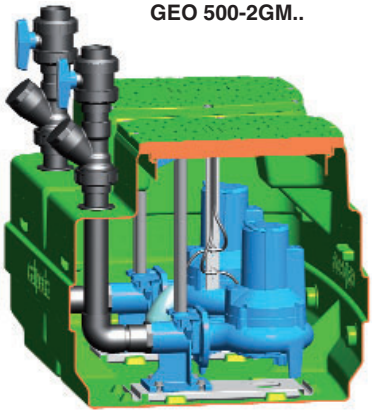

CALPEDA ROMANIA - INFINITY PUMPS SRL
Tel: 0268.33.47.47 / 0722.244.944
vanzari@calpeda.ro | www.calpeda.ro

GEO 40

Automatic clear water collecting and lifting station

Pumps characteristics

GEO 40-GXRM **GEO 40-GXRM GF**

Features
Automatic collecting and lifting station for clean water with GXRM pump type .

It includes:
1 tank capacity 40 l
1 single-phase pump with 5 m cable and float switch
1 non-return valve with clapet on the pump delivery side
1 discharge pipe kit arranged for the connection of a Ø 40 mm PVC pipe
1 PVC adapting nipple for Ø 40 mm inlet
1 connector for Ø 25 mm flexible pipe

On demand
1 pump with 10 m cable

Single-phase type	1 ~ 230 V		Q max	H max
	kW	A	m³/h	m
GEO 40-GXRM 9	0,25	2,5	10,2	8,3
GEO 40-GXRM 9 GF	0,25	2,5	10,2	8,3
GEO 40-GXRM 11 GF	0,37	3,5	12	10,4
GEO 40-GXRM 13 GF	0,45	4,5	13,2	11,7

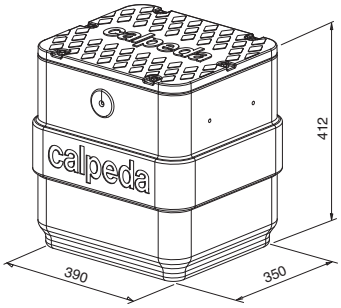

GXRM
Submersible drainage pump in chrome-nickel stainless steel, for clean water containing solids up to 10 mm grain size, with vertical delivery port.
Open impeller.
2-pole induction motor, 50Hz (n ≈ 2900 rpm),
Single-phase 230 V +/-10% with float switch and thermal protector.
- GXRM: with standard float switch.
- GXRM .. GF: with vertical magnetic float switch.
Incorporated capacitor.
Cable length 5 m, Shuko plug.
Liquid temperature up to 35 °C

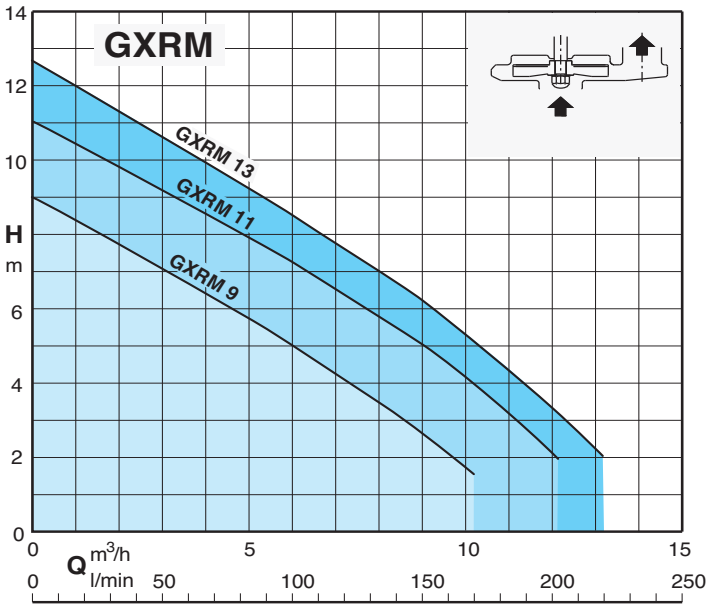

CALPEDA ROMANIA - INFINITY PUMPS SRL
Tel: 0268.33.47.47 / 0722.244.944
vanzari@calpeda.ro | www.calpeda.ro

GEO 230

Automatic clear water collecting and lifting station

Pumps characteristics

GEO 230-GM 10

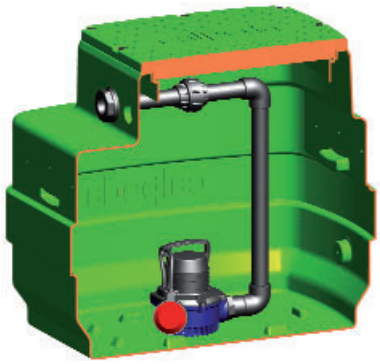

Features

Automatic clear water collecting and lifting station GM 10 pump series.

It includes:

1 tank capacity 230 l
1 single-phase pump with 5 m cable and float switch
1 control box QM 6,3 type with capacitor
1 discharge pipe kit Ø 40 mm in PVC

On demand

1 pump with 10 m cable
1 discharge pipe kit Ø 40 mm in PVC with a ball valve and non-return ball valve
1 support kit with safety float switch and auto-supplied control panel for remote alarm with horn and flashing light
- extention 300 mm

Single-phase type	1 ~ 230 V		Q max	H max
	kW	A	m³/h	m
GEO 230-GM 10	0,3	1,75	12	6,5

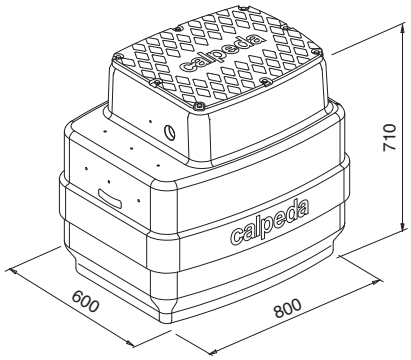

GM 10

Submersible drainage pump constructed from composite polymers.
Shaft of chrome steel AISI 430.
2-pole induction motor, 50Hz (n ≈ 2900 rpm).
Single-phase 230 V +/-10% with thermal protector.
Float switch for automatic operation.
5 m cable and control box QM 6,3 with capacitor.
Liquid temperature up to 35 °C

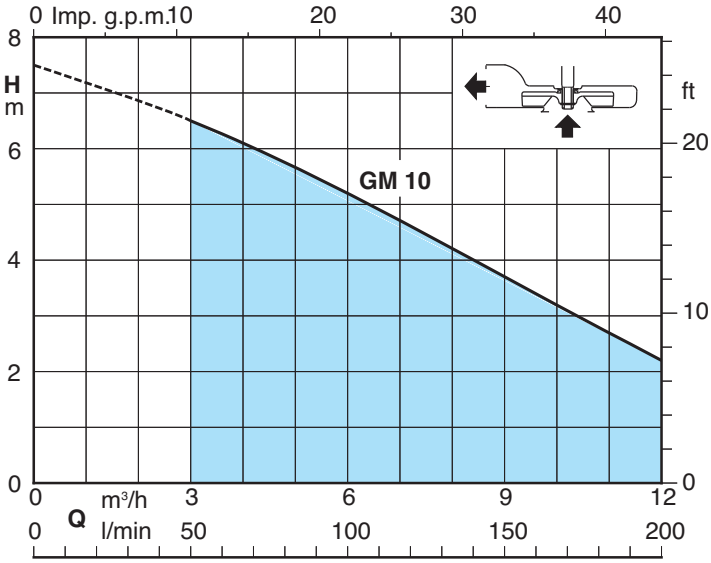

CALPEDA ROMANIA - INFINITY PUMPS SRL
Tel: 0268.33.47.47 / 0722.244.944
vanzari@calpeda.ro | www.calpeda.ro

GEO 230

Automatic waste water collecting and lifting station

Pumps characteristics

GEO 230-GX..

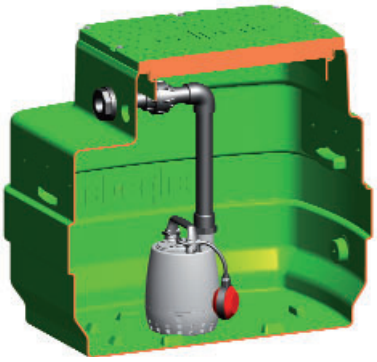

Features

Automatic collecting and lifting station - for clean water **GXR** pump series.
- for waste water **GXV** pump series.

It includes:

1 tank capacity 230 l
1 single-phase pump with 5 m cable and float switch
1 discharge pipe kit Ø 40 mm in PVC

On demand

1 pump with 10 m cable
1 discharge pipe kit Ø 40 mm in PVC with a ball valve and non-return ball valve
1 support kit with safety float switch and auto-supplied control panel for remote alarm with horn and flashing light
- extention 300 mm

Single-phase type	1 ~ 230 V		Q max	H max
	kW	A	m³/h	m
GEO 230-GXVM 25-6	0,25	2,5	10,2	5,7
GEO 230-GXVM 25-8	0,37	3,5	12	7,8
GEO 230-GXVM 25-10	0,45	4,5	13,2	9,5
GEO 230-GXRM 9	0,25	2,5	10,2	8,3
GEO 230-GXRM 11	0,37	3,5	12	10,4
GEO 230-GXRM 13	0,45	4,5	13,2	11,7

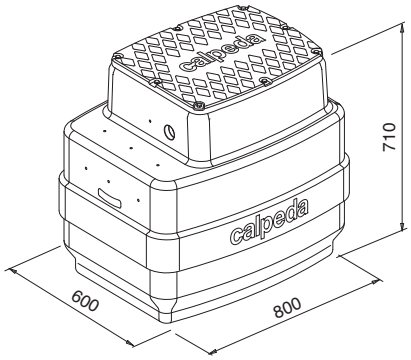

GXVM **GXRM**

GXRM, GXVM

Submersible drainage pump in chrome-nickel stainless steel, with vertical delivery port.
GXRM: with open impeller.
GXVM: with free-flow (vortex) impeller.
2-pole induction motor, 50Hz (n ≈ 2900 rpm),
Single-phase 230 V +/-10% with float switch and thermal protector. Incorporated capacitor.
Cable length 5 m.
Liquid temperature up to 35 °C

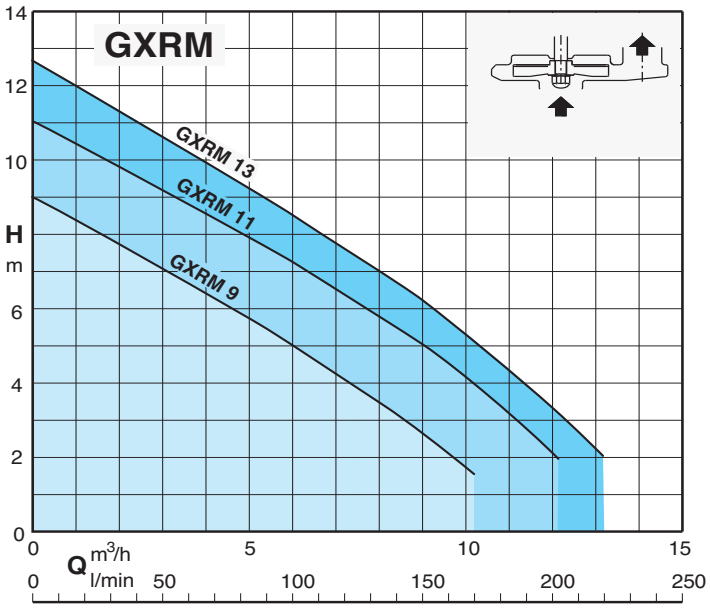

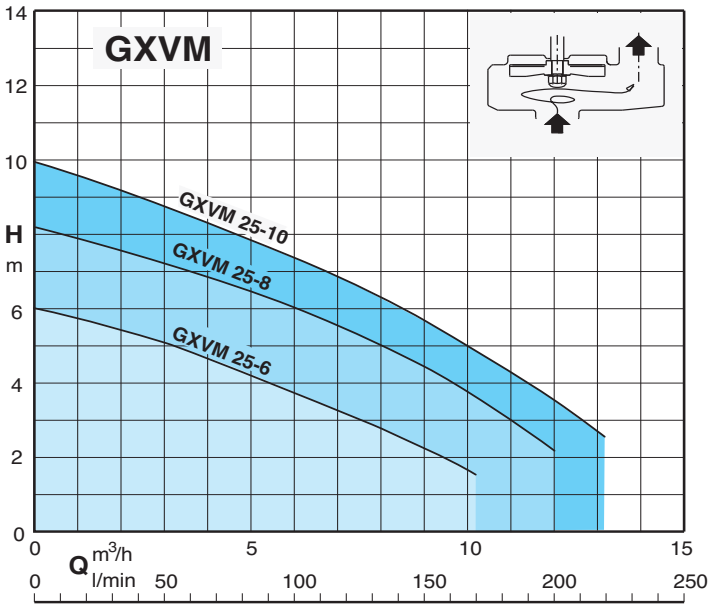

CALPEDA ROMANIA - INFINITY PUMPS SRL
Tel: 0268.33.47.47 / 0722.244.944
vanzari@calpeda.ro | www.calpeda.ro

GEO 230

Automatic clear water collecting and lifting station

Pumps characteristics

GEO 230-GQR..

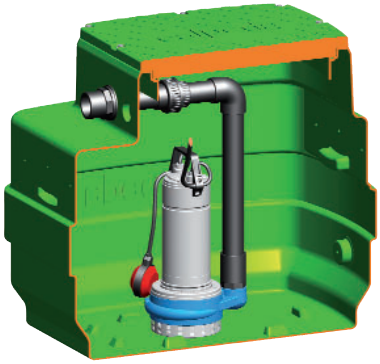

Features

Automatic collecting and lifting station for clean water with **GQR** pump series.

It includes:

1 tank capacity 230 l
1 pump - single-phase with 10 m cable and float switch
- three-phase with 10 m cable with support and float switch kit
1 control box for three-phase version
1 discharge pipe kit Ø 50 mm in PVC

On demand

1 discharge pipe kit Ø 50 mm in PVC with a ball valve and non-return ball valve
1 support kit with safety float switch and auto-supplied control panel for remote alarm with horn and flashing light
- extention 300 mm

Single-phase type	1 ~ 230 V		Q max	H max
	kW	A	m³/h	m
GEO 230-GQRM 10-10	0,45	3,1	18	9,5
GEO 230-GQRM 10-12	0,55	3,6	21	11,6
GEO 230-GQRM 10-14	0,75	4,6	24	13,5
GEO 230-GQRM 10-16	0,9	6	27	15,5
GEO 230-GQRM 10-18	1,1	8	30	17,5
GEO 230-GQRM 10-20	1,5	13	30	19,5

Three-phase type	3 ~ 400 V		Q max	H max
	kW	A	m³/h	m
GEO 230-GQR 10-10	0,45	1,2	18	9,5
GEO 230-GQR 10-12	0,55	1,4	21	11,6
GEO 230-GQR 10-14	0,75	1,6	24	13,5
GEO 230-GQR 10-16	0,9	2,3	27	15,5
GEO 230-GQR 10-18	1,1	2,8	30	17,5
GEO 230-GQR 10-20	1,5	3,8	30	19,5

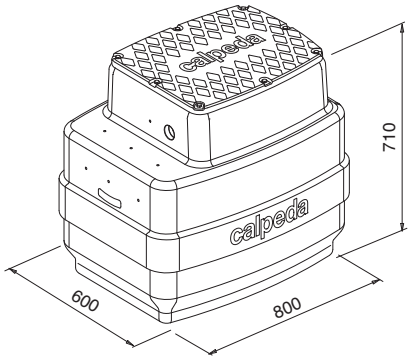

GQR

Single-impeller submersible drainage pump, with vertical delivery port.
GQR: with open impeller.
2-pole induction motor, 50Hz (n ≈ 2900 rpm),
GQR: three-phase 400 V +/-10%;
GQRM: Single-phase 230 V +/-10% with float switch and thermal protector. Incorporated capacitor.
Cable length 10 m.
Liquid temperature up to 35 °C

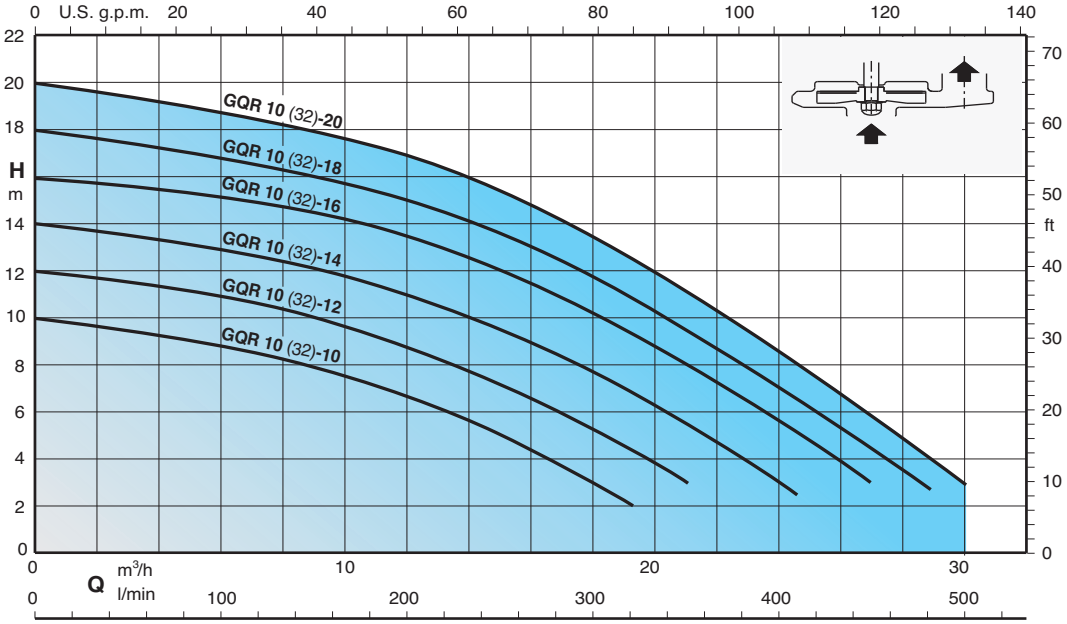

CALPEDA ROMANIA - INFINITY PUMPS SRL
Tel: 0268.33.47.47 / 0722.244.944
vanzari@calpeda.ro | www.calpeda.ro

GEO 230

Automatic waste water collecting and lifting station

Pumps characteristics

GEO 230-GQR..

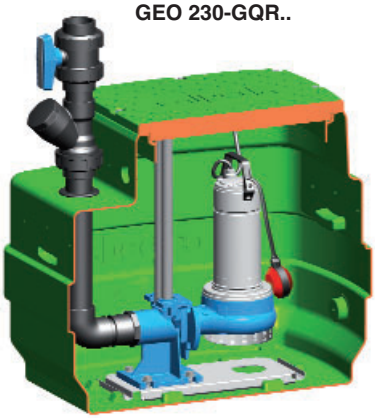

Features

Automatic collecting and lifting station for clean water with **GQR** pump series.

It includes:

1 tank capacity 230 l
1 pump - single-phase 10 m cable and float switch
- three-phase with 10 cable with support kit and float switch
1 control box for three-phase version
1 duck foot coupling kit
1 discharge pipe kit Ø 63 mm in PVC with a ball valve and non-return ball valve

On demand

1 safety float switch (with support for single-phase version) and auto-supplied control panel for remote alarm with horn and flashing light
- extention 300 mm

Single-phase type	1 ~ 230 V		Q max	H max
	kW	A	m³/h	m
GEO 230-GQRM 10 32-10	0,45	3,1	18	9,5
GEO 230-GQRM 10 32-12	0,55	3,6	21	11,6
GEO 230-GQRM 10 32-14	0,75	4,6	24	13,5
GEO 230-GQRM 10 32-16	0,9	6	27	15,5
GEO 230-GQRM 10 32-18	1,1	8	30	17,5
GEO 230-GQRM 10 32-20	1,5	13	30	19,5

Three-phase type	3 ~ 400 V		Q max	H max
	kW	A	m³/h	m
GEO 230-GQR 10 32-10	0,45	1,2	18	9,5
GEO 230-GQR 10 32-12	0,55	1,4	21	11,6
GEO 230-GQR 10 32-14	0,75	1,6	24	13,5
GEO 230-GQR 10 32-16	0,9	2,3	27	15,5
GEO 230-GQR 10 32-18	1,1	2,8	30	17,5
GEO 230-GQR 10 32-20	1,5	3,8	30	19,5

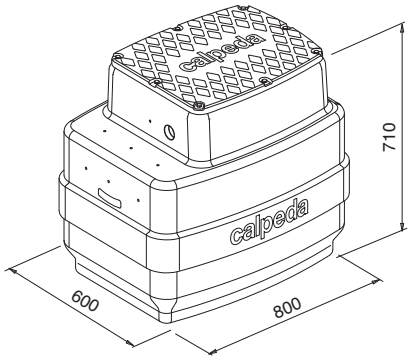

GQR

Single-impeller submersible drainage pump, with horizontal delivery port.
GQR: with open impeller.
2-pole induction motor, 50Hz (n ≈ 2900 rpm),
GQR: three-phase 400 V +/-10%;
GQRM: Single-phase 230 V +/-10% with float switch and thermal protector. Incorporated capacitor.
Cable length 10 m.
Liquid temperature up to 35 °C

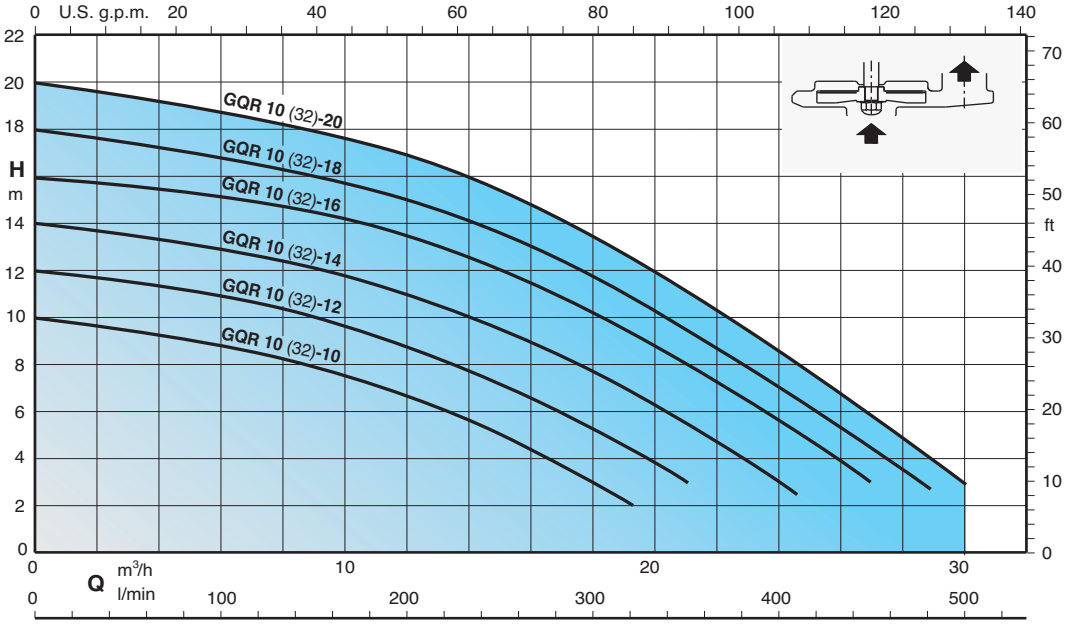

CALPEDA ROMANIA - INFINITY PUMPS SRL
Tel: 0268.33.47.47 / 0722.244.944
vanzari@calpeda.ro | www.calpeda.ro

GEO 230

Automatic waste water collecting and lifting station

Pumps characteristics

GEO 230-GX..

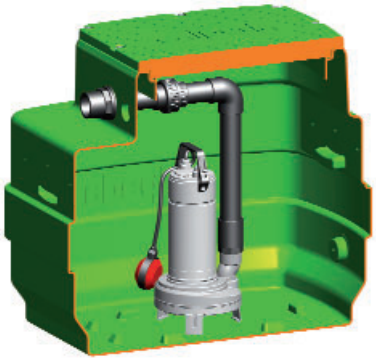

Features

Automatic waste water collecting and lifting station GX 40 pump series.

It includes:

1 tank capacity 230 l
1 pump - single-phase with 10 m cable and float switch
- three-phase with 10 m cable with support and float switch kit
1 control box for three-phase version
1 discharge pipe kit Ø 50 mm in PVC

On demand

1 discharge pipe kit Ø 50 mm in PVC with a ball valve and non-return ball valve
1 safety float switch (with support for single-phase version) and auto-supplied control panel for remote alarm with horn and flashing light
- extention 300 mm

Single-phase type	1 ~ 230 V		Q max	H max
	kW	A	m³/h	m
GEO 230-GXCM 40-10	0,55	4,6	21	9
GEO 230-GXCM 40-13	0,9	6,6	26	11,6
GEO 230-GXVM 40-7	0,55	4,6	15	6,2
GEO 230-GXVM 40-8	0,75	5,4	18	7,2
GEO 230-GXVM 40-9	0,9	6	21	8,1

Three-phase type	3 ~ 400 V		Q max	H max
	kW	A	m³/h	m
GEO 230-GXC 40-10	0,55	1,6	21	9
GEO 230-GXC 40-13	0,9	2,3	26	11,6
GEO 230-GXV 40-7	0,55	1,6	15	6,2
GEO 230-GXV 40-8	0,75	2,2	18	7,2
GEO 230-GXV 40-9	0,9	2,3	21	8,1

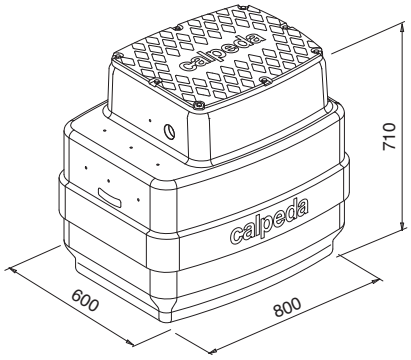

GXC, GXV

Submersible sewage and drainage pumps in chrome-nickel stainless steel, with vertical delivery port.
GXC, with two-passage impeller.
GXV: with free-flow (vortex) impeller
2-pole induction motor, 50Hz (n ≈ 2900 rpm).
GXC, GXV: three-phase 400 V; +/-10%
GXCM, GXVM: single-phase 230 V +/-10%, with float switch and thermal protector. Incorporated capacitor.
Cable length 10 m.
Liquid temperature up to 35 °C

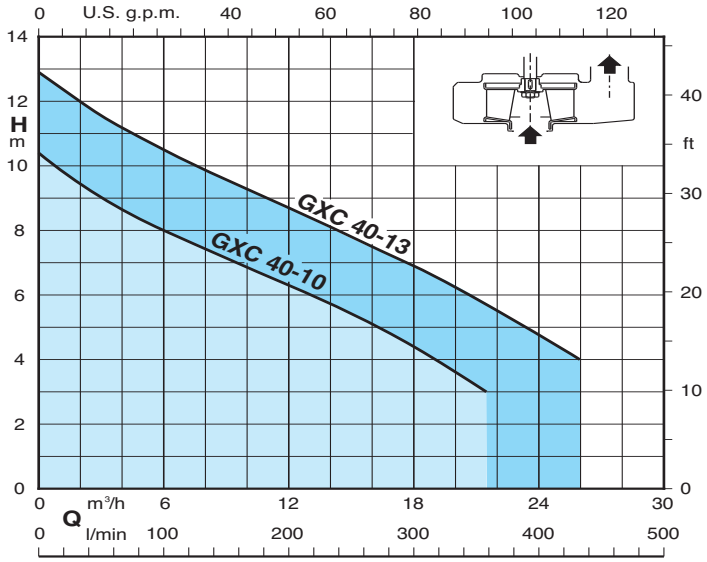

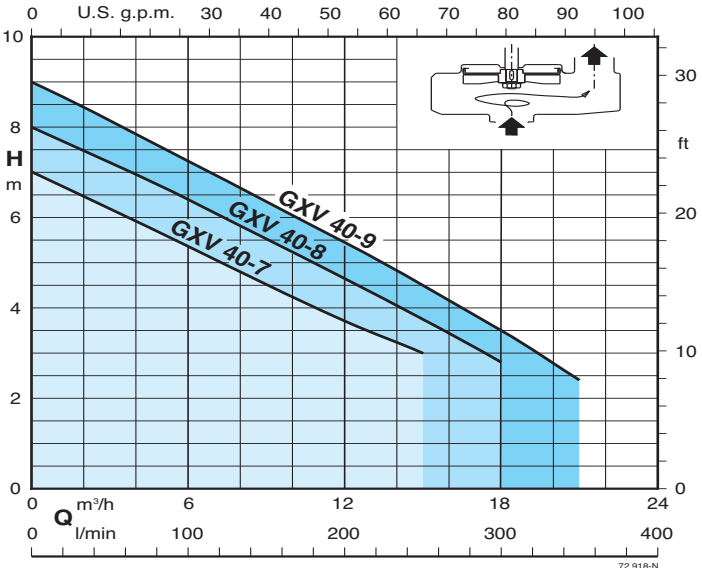

CALPEDA ROMANIA - INFINITY PUMPS SRL
Tel: 0268.33.47.47 / 0722.244.944
vanzari@calpeda.ro | www.calpeda.ro

GEO 230

Automatic waste water collecting and lifting station

Pumps characteristics

GEO 230-GQG

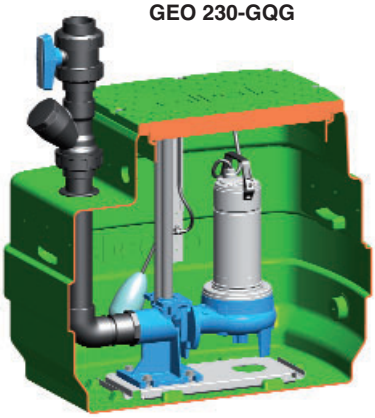

Features
Automatic sewage water collecting and lifting station with grinder pumps GQG series.

It includes:
1 tank capacity 230 l
1 pump - single-phase with 10 m cable without float switch
- three-phase with 10 m cable
1 support kit with float switch
1 control box (with capacitor for single-phase motors)
1 duck foot coupling kit
1 discharge pipe kit Ø 63 mm in PVC with a ball valve and non-return ball valve

On demand
1 safety float switch and auto-supplied control panel for remote alarm with horn and flashing light
- extention 300 mm

Single-phase type	1 ~ 230 V		Q max	H max
	kW	A	m³/h	m
GEO 230-GQGM 6-18	0,9	7	13,2	16,5
GEO 230-GQGM 6-21	1,1	7,5	15	19,2
GEO 230-GQGM 6-25	1,5	9,5	16,8	23

Three-phase type	3 ~ 400 V		Q max	H max
	kW	A	m³/h	m
GEO 230-GQG 6-18	0,9	2,3	13,2	16,5
GEO 230-GQG 6-21	1,1	2,8	15	19,2
GEO 230-GQG 6-25	1,5	3,8	16,8	23

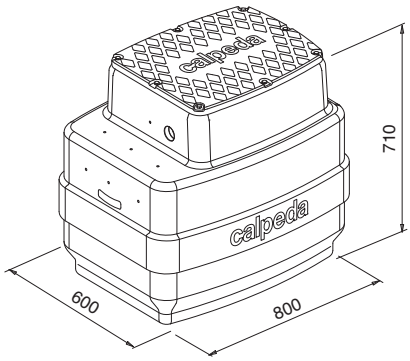

GQG
Submersible pumps with high power grinder, with horizontal delivery port.
2-pole induction motor, 50Hz (n ≈ 2900 rpm)
GQG: three-phase 400 V +/-10%;
GQGM: Single-phase 230 V +/-10% complete control box with thermal protector and capacitors (without float switch).
10 m cable.
Liquid temperature up to 35 °C.

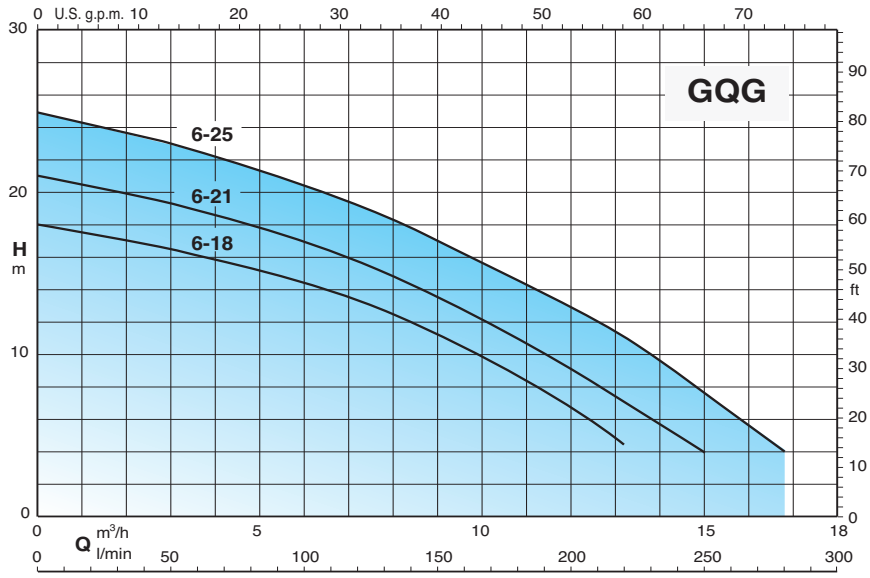

CALPEDA ROMANIA - INFINITY PUMPS SRL
Tel: 0268.33.47.47 / 0722.244.944
vanzari@calpeda.ro | www.calpeda.ro

GEO 230

Automatic waste water collecting and lifting station

Pumps characteristics

GEO 230-GQS

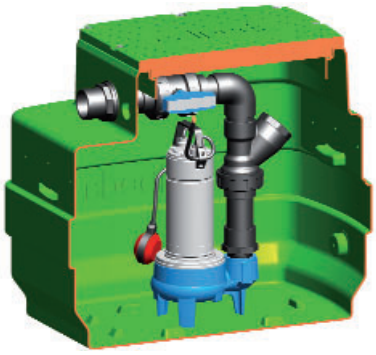

Features
Automatic waste water collecting and lifting station GQS series.

It includes:
1 tank capacity 230 l
1 pump - single-phase 10 m cable and float switch
- three-phase with 10 cable with support kit and float switch
1 control box for three-phase version
1 discharge pipe kit Ø 63 mm in PVC with a ball valve and non-return ball valve

On demand
1 safety float switch (with support for single-phase version) and auto-supplied control panel for remote alarm with horn and flashing light
- extention 300 mm

Single-phase type	1 ~ 230 V		Q max	H max
	kW	A	m³/h	m
GEO 230-GQSM 50-8	0,55	4,3	24	7,4
GEO 230-GQSM 50-9	0,75	4,8	27	8,8
GEO 230-GQSM 50-11	0,9	6,6	33	10,5
GEO 230-GQSM 50-13	1,1	8,4	36	12,5
GEO 230-GQSM 50-15	1,5	13	36	14,4

Three-phase type	3 ~ 400 V		Q max	H max
	kW	A	m³/h	m
GEO 230-GQS 50-8	0,55	1,5	24	7,4
GEO 230-GQS 50-9	0,75	1,8	27	8,8
GEO 230-GQS 50-11	0,9	2,3	33	10,5
GEO 230-GQS 50-13	1,1	3	36	12,5
GEO 230-GQS 50-15	1,5	4	36	14,4

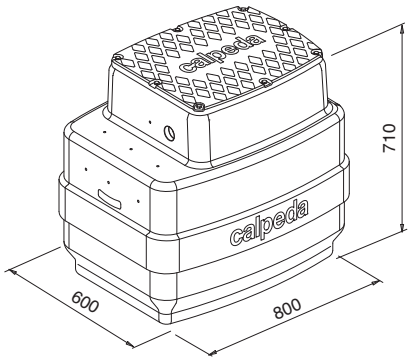

GQS
Single-impeller submersible pumps, with vertical delivery port.
GQS: with free-flow (vortex) impeller
2-pole induction motor, 50Hz (n ≈ 2900 rpm)
GQS: three-phase 400 V +/-10%;
GQSM: single-phase 230 V +/-10%, with float switch and thermal protector. Incorporated capacitor.
Cable length 10 m.
Liquid temperature up to 35 °C

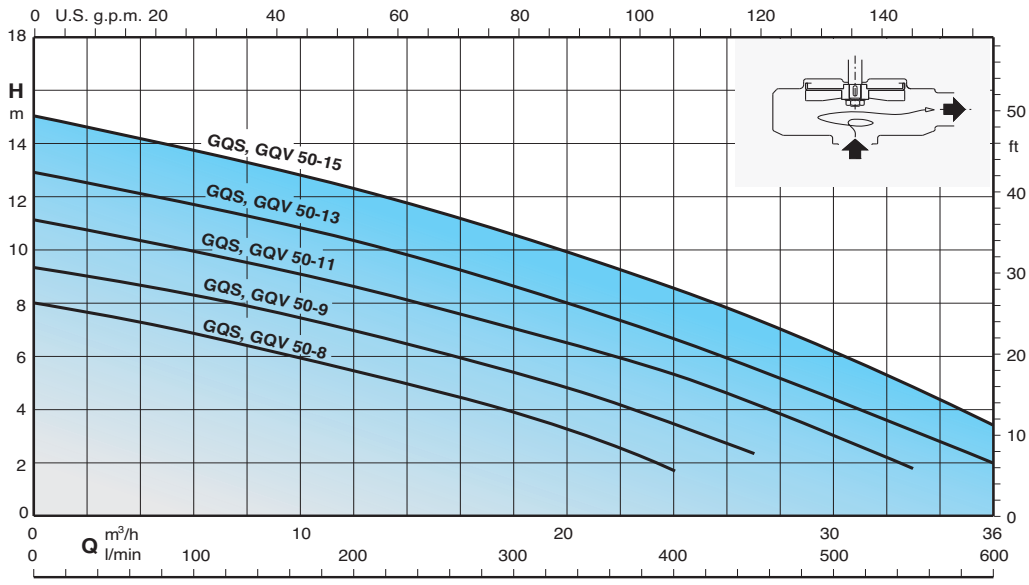

CALPEDA ROMANIA - INFINITY PUMPS SRL
Tel: 0268.33.47.47 / 0722.244.944
vanzari@calpeda.ro | www.calpeda.ro

GEO 230

Automatic waste water collecting and lifting station

Pumps characteristics

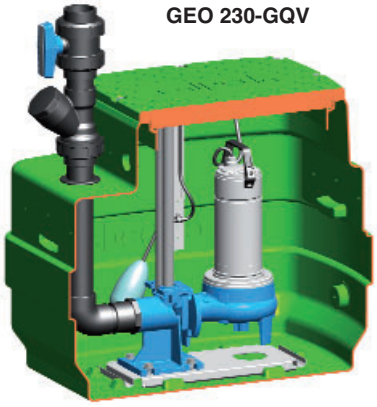

GEO 230-GQV

Features
Automatic waste water collecting and lifting station GQV series.

It includes:
1 tank capacity 230 l
1 pump - single-phase with 10 m cable, without float switch
- three-phase with 10 cable, without float switch
1 support kit with float switch
1 control box
1 duck foot coupling kit
1 discharge pipe kit Ø 63 mm in PVC/inox with a ball valve and non-return ball valve

On demand
1 safety float switch and auto-supplied control panel for remote alarm with horn and flashing light
- extention 300 mm

Single-phase type	1 ~ 230 V		Q max	H max
	kW	A	m³/h	m
GEO 230-GQVM 50-8	0,55	4,3	24	7,4
GEO 230-GQVM 50-9	0,75	4,8	27	8,8
GEO 230-GQVM 50-11	0,9	6,6	33	10,5
GEO 230-GQVM 50-13	1,1	8,4	36	12,5
GEO 230-GQVM 50-15	1,5	13	36	14,4

Three-phase type	3 ~ 400 V		Q max	H max
	kW	A	m³/h	m
GEO 230-GQV 50-8	0,55	1,5	24	7,4
GEO 230-GQV 50-9	0,75	1,8	27	8,8
GEO 230-GQV 50-11	0,9	2,3	33	10,5
GEO 230-GQV 50-13	1,1	3	36	12,5
GEO 230-GQV 50-15	1,5	4	36	14,4

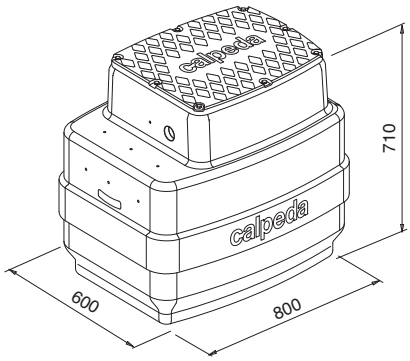

GQV
Single-impeller submersible pumps, with horizontal delivery port.
GQV: with free-flow (vortex) impeller
2-pole induction motor, 50Hz (n ≈ 2900 rpm)
GQV: three-phase 400 V +/-10%;
GQVM: single-phase 230 V +/-10%, with thermal protector, with built-in capacitor (without float switch).
Cable length 10 m.
Liquid temperature up to 35 °C

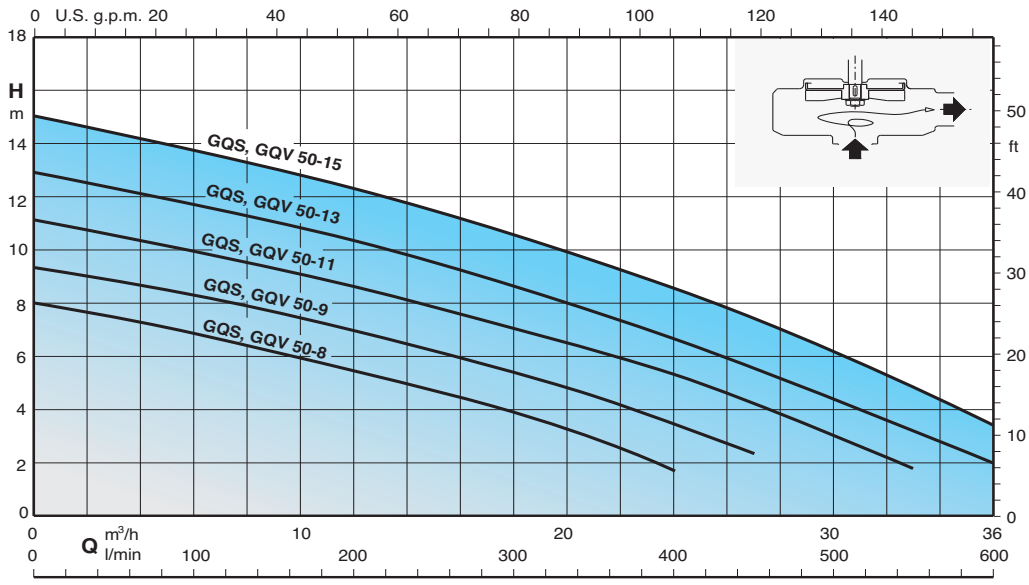

CALPEDA ROMANIA - INFINITY PUMPS SRL
Tel: 0268.33.47.47 / 0722.244.944
vanzari@calpeda.ro | www.calpeda.ro

GEO 230

Automatic waste water collecting and lifting station

Pumps characteristics

GEO 230-GM..

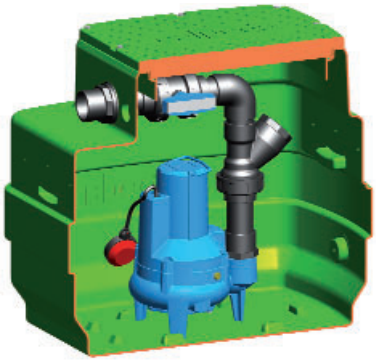

Features
Automatic waste water collecting and lifting station GMV, GMC series.

It includes:
1 tank capacity 230 l
1 pump - single-phase 10 m cable and float switch
- three-phase with 10 cable with support kit and float switch
1 control box for three-phase version
1 discharge pipe kit Ø 63 mm in PVC with a ball valve and non-return ball valve

On demand
1 safety float switch (with support for single-phase version) and auto-supplied control panel for remote alarm with horn and flashing light
- extention 300 mm

Single-phase type	1 ~ 230 V		Q max	H max
	kW	A	m³/h	m
GEO 230-GMCM 50CE	0,75	4,5	36	9,5
GEO 230-GMCM 50BE	1,1	6,5	42	12,5
GEO 230-GMVM 50CE	0,75	4,5	31	8
GEO 230-GMVM 50BE	1,1	6,5	35	9,5

Three-phase type	3 ~ 400 V		Q max	H max
	kW	A	m³/h	m
GEO 230-GMC 50CE	0,75	1,9	36	9,5
GEO 230-GMC 50BE	1,1	2,7	42	12,5
GEO 230-GMC 50AE	1,5	3,8	48	14,5
GEO 230-GMV 50CE	0,75	1,9	31	8
GEO 230-GMV 50BE	1,1	2,7	35	9,5
GEO 230-GMV 50AE	1,5	3,8	39	11,5

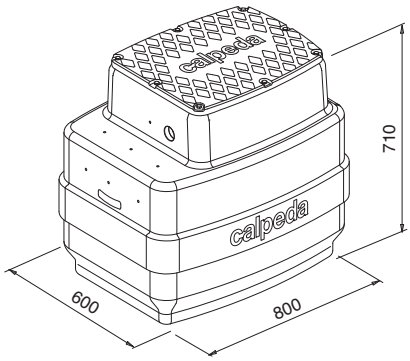

GMC, GMV
Submersible sewage and drainage pumps.
GMC, with single-channel impeller.
GMV, with free-flow (vortex) impeller.
2-pole induction motor, 50Hz (n ≈ 2900 rpm)
GMV, GMC: three-phase 400 V +/-10%;
with 2 built-in thermal protectors to be connected to the control panel.
GMVM, GMVM: single-phase 230 V ± 10%, built-in thermal protector and built-in capacitor.
Float switch for automatic operation.
Cable length 10 m.
Liquid temperature up to 35 °C.

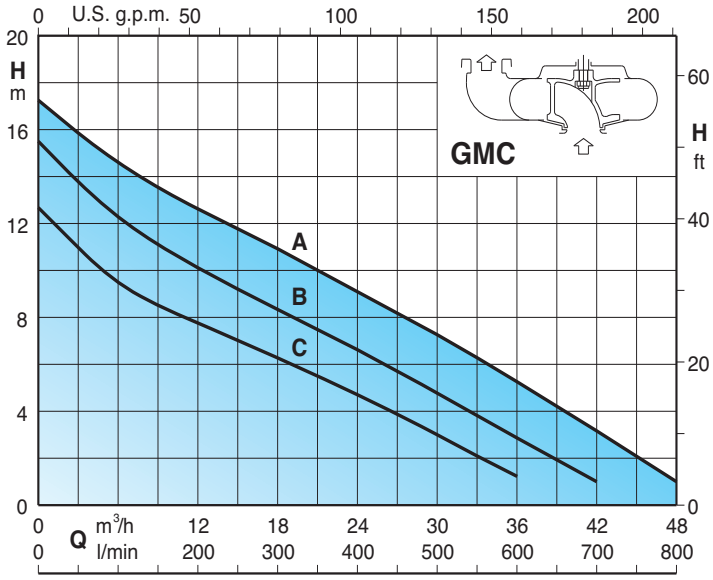

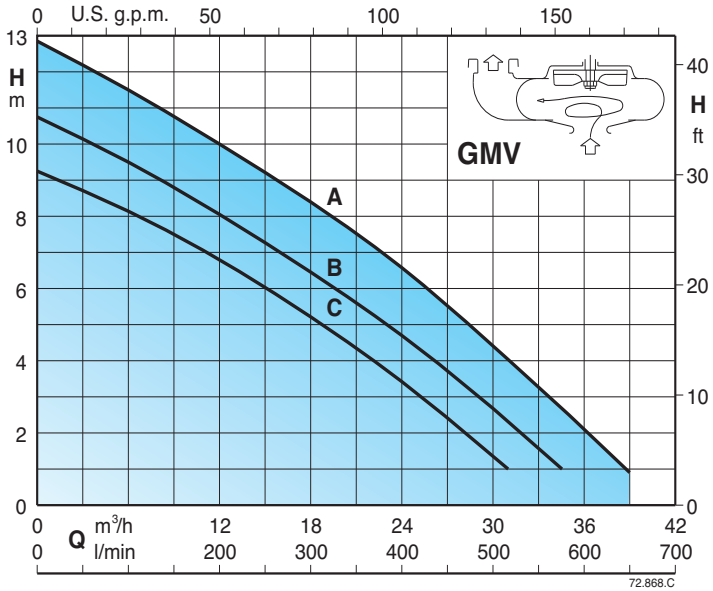

CALPEDA ROMANIA - INFINITY PUMPS SRL
Tel: 0268.33.47.47 / 0722.244.944
vanzari@calpeda.ro | www.calpeda.ro

GEO 230

Automatic waste water collecting and lifting station

Pumps characteristics

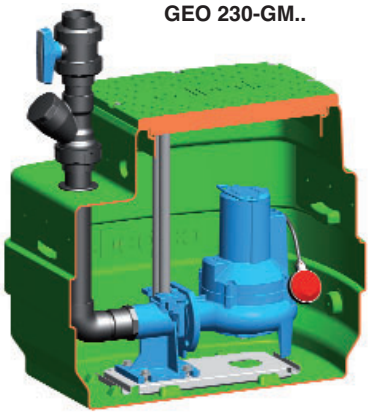

GEO 230-GM..

Features
Automatic waste water collecting and lifting station GMV, GMC series.

It includes:
1 tank capacity 230 l
1 pump - single-phase 10 m cable and float switch
- three-phase with 10 cable with support kit and float switch
1 control box for three-phase version
1 duck foot coupling kit
1 discharge pipe kit Ø 63 mm in PVC with a ball valve and non-return ball valve

On demand
1 safety float switch (with support for single-phase version) and auto-supplied control panel for remote alarm with horn and flashing light
- extention 300 mm

Single-phase type	1 ~ 230 V		Q max	H max
	kW	A	m³/h	m
GEO 230-GMCM 50-65C	0,75	4,5	36	9,5
GEO 230-GMCM 50-65B	1,1	6,5	42	12,5
GEO 230-GMVM 50-65C	0,75	4,5	31	8
GEO 230-GMVM 50-65B	1,1	6,5	35	9,5

Three-phase type	3 ~ 400 V		Q max	H max
	kW	A	m³/h	m
GEO 230-GMC 50-65C	0,75	1,9	36	9,5
GEO 230-GMC 50-65B	1,1	2,7	42	12,5
GEO 230-GMC 50-65A	1,5	3,8	48	14,5
GEO 230-GMV 50-65C	0,75	1,9	31	8
GEO 230-GMV 50-65B	1,1	2,7	35	9,5
GEO 230-GMV 50-65A	1,5	3,8	39	11,5

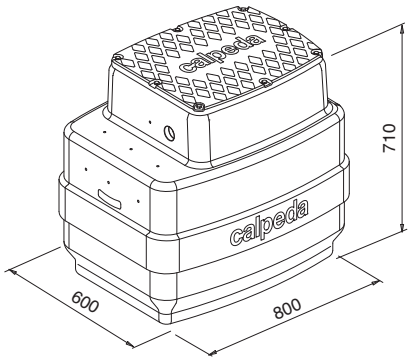

GMC, GMV
Submersible sewage and drainage pumps.
GMC, with single-channel impeller.
GMV, with free-flow (vortex) impeller.
2-pole induction motor, 50Hz (n ≈ 2900 rpm)
GMV, GMC: three-phase 400 V +/-10%;
with 2 built-in thermal protectors to be connected to the control panel.
GMVM, GMVM: single-phase 230 V ± 10%, built-in thermal protector and built-in capacitor.
Float switch for automatic operation.
Cable length 10 m.
Liquid temperature up to 35 °C.

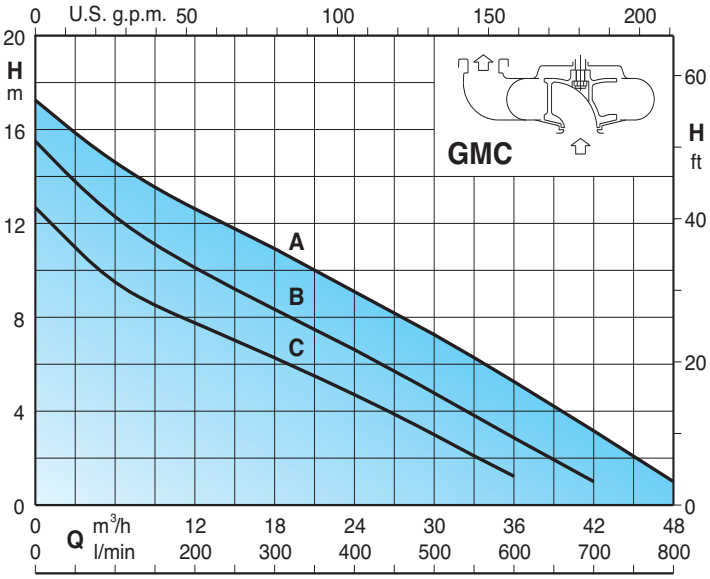

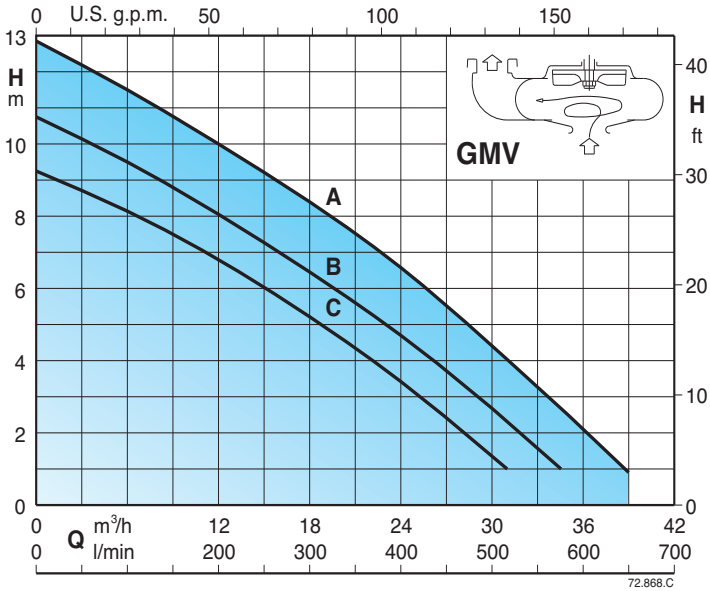

CALPEDA ROMANIA - INFINITY PUMPS SRL
Tel: 0268.33.47.47 / 0722.244.944
vanzari@calpeda.ro | www.calpeda.ro

GEO 500

Automatic clear water collecting and lifting station

Pumps characteristics

GEO 500-GM 10

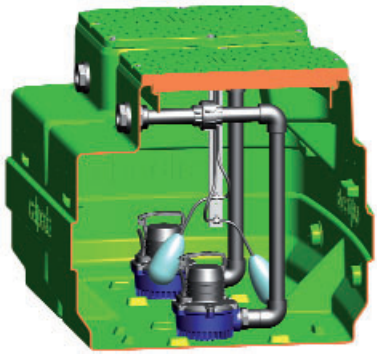

Features
Automatic clear water collecting and lifting station with GM 10 pump series.

It includes:
1 tank capacity 500 l
2 single-phase pump with 5 m cable without float switch
1 support kit with 2 float switch
1 control box
2 discharge pipe kit Ø 40 mm in PVC

On demand
2 single-phase pumps with 10 m cable, without float switch
2 discharge pipe kit Ø 40 mm in PVC with a ball valve and non-return ball valve
1 safety float switch and auto-supplied control panel for remote alarm with horn and flashing light
- extention 300 mm

Single-phase type	1 ~ 230 V		Q max	H max
	kW	A	m³/h	m
GEO 500-2GM 10	0,3x2	1,75x2	12x2	6,5

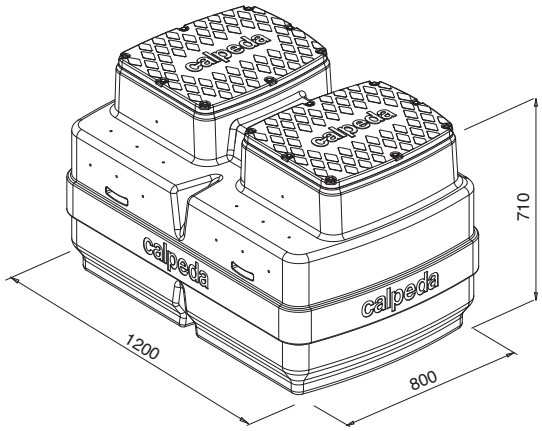

GM 10
Submersible drainage pump constructed from composite polymers.
Shaft of chrome steel AISI 430.
2-pole induction motor, 50Hz (n ≈ 2900 rpm).
Single-phase 230 V +/-10% with thermal protector (without float switch).
5 m cable and control box with capacitor.
Liquid temperature up to 35 °C

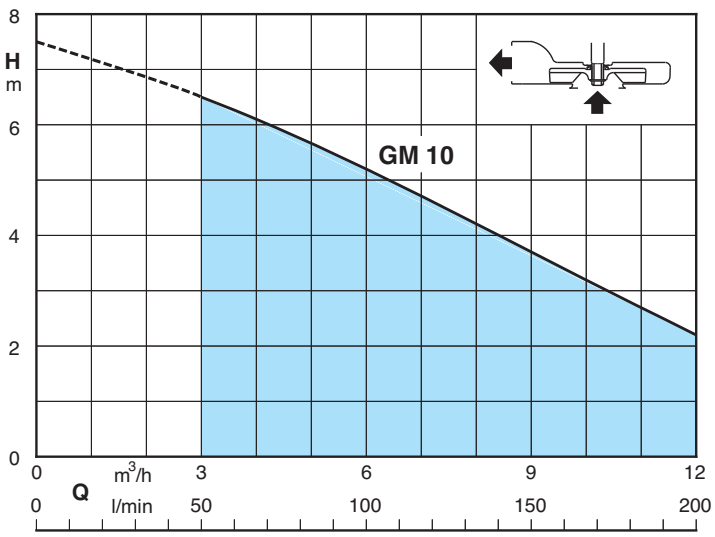

CALPEDA ROMANIA - INFINITY PUMPS SRL
Tel: 0268.33.47.47 / 0722.244.944
vanzari@calpeda.ro | www.calpeda.ro

GEO 500

Automatic waste water collecting and lifting station

Pumps characteristics

GEO 500-2GX..

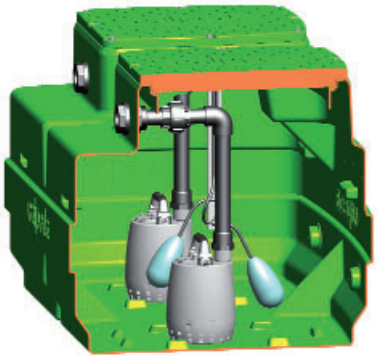

Single-phase type	1 ~ 230 V kW	A	Q max m³/h	H max m
GEO 500-2GXVM 25-6	0,25x2	2,5x2	10,2x2	5,7
GEO 500-2GXVM 25-8	0,37x2	3,5x2	12x2	7,8
GEO 500-2GXVM 25-10	0,45x2	4,5x2	13,2x2	9,5
GEO 500-2GXRM 9	0,25x2	2,5x2	10,2x2	8,3
GEO 500-2GXRM 11	0,37x2	3,5x2	12x2	10,4
GEO 500-2GXRM 13	0,45x2	4,5x2	13,2x2	11,7

Features

Automatic collecting and lifting station - for clean water with **GXR** pump series
- for waste water with **GXV** pump series.

It includes:

1 tank capacity 500 l
2 single-phase pump with 5 m cable without float switch
1 support kit with 2 float switch
1 control box
2 discharge pipe kit Ø 40 mm in PVC

On demand

2 single-phase pumps with 10 m cable, without float switch
2 discharge pipe kit Ø 40 mm in PVC with a ball valve and non-return ball valve
1 safety float switch and auto-supplied control panel for remote alarm with horn and flashing light
- extention 300 mm

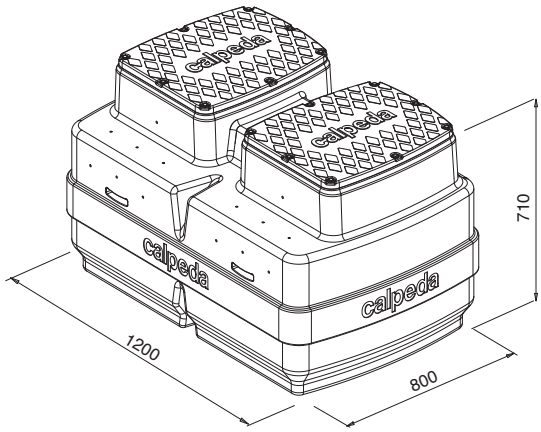

GXRM **GXVM**

GXRM, GXVM

Submersible drainage pump in chrome-nickel stainless steel, with vertical delivery port.
GXRM: with open impeller.
GXVM: with free-flow (vortex) impeller.
2-pole induction motor, 50Hz (n ≈ 2900 rpm),
Single-phase 230 V +/-10% with thermal protector. Incorporated capacitor.
Cable length 5 m.
Liquid temperature up to 35 °C

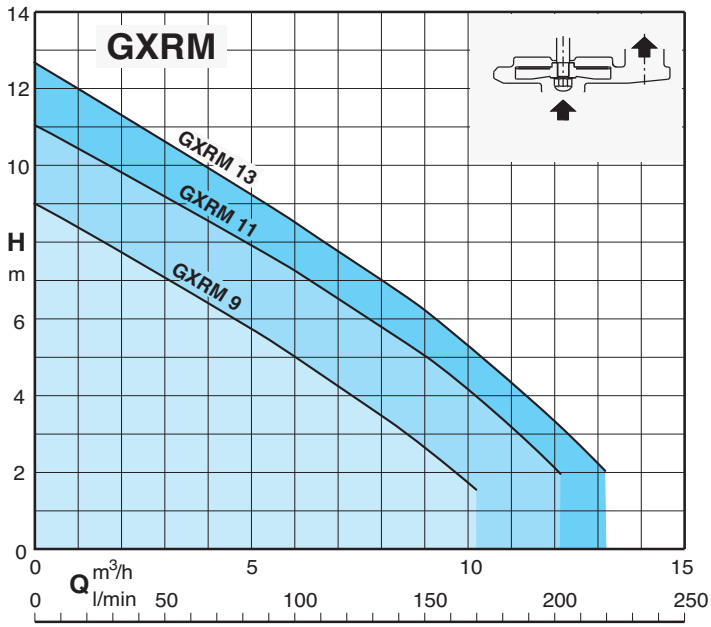

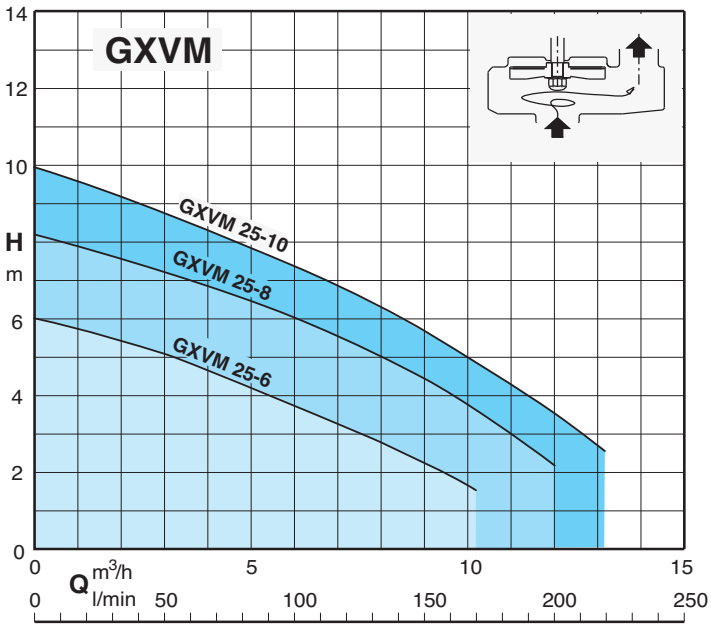

CALPEDA ROMANIA - INFINITY PUMPS SRL
Tel: 0268.33.47.47 / 0722.244.944
vanzari@calpeda.ro | www.calpeda.ro

GEO 500

Automatic clear water collecting and lifting station

Pumps characteristics

GEO 500-2GQR

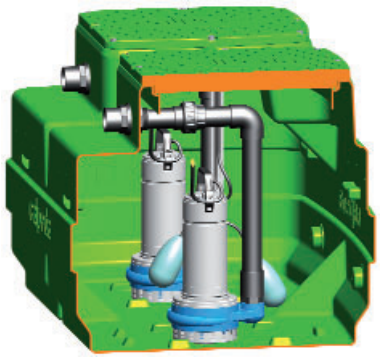

Features

Automatic collecting and lifting station for clean water with **GQR** pump series

It includes:

1 tank capacity 500 l
2 pumps - single-phase with 10 m cable without float switch
- three-phase with 10 m cable
1 support kit with 2 float switch
1 control box
2 discharge pipe kit Ø 50 mm in PVC

On demand

2 discharge pipe kit Ø 50 mm in PVC with a ball valve and non-return ball valve
1 safety float switch and auto-supplied control panel for remote alarm with horn and flashing light
- extention 300 mm

Single-phase type	1 ~ 230 V		Q max	H max
	kW	A	m³/h	m
GEO 500-2GQRM 10-10	0,45x2	3,1x2	18x2	9,5
GEO 500-2GQRM 10-12	0,55x2	3,6x2	21x2	11,6
GEO 500-2GQRM 10-14	0,75x2	4,6x2	24x2	13,5
GEO 500-2GQRM 10-16	0,9x2	6x2	27x2	15,5
GEO 500-2GQRM 10-18	1,1x2	8x2	30x2	17,5
GEO 500-2GQRM 10-20	1,5x2	13 x2	30x2	19,5

Three-phase type	3 ~ 400 V		Q max	H max
	kW	A	m³/h	m
GEO 500-2GQR 10-10	0,45x2	1,2x2	18x2	9,5
GEO 500-2GQR 10-12	0,55x2	1,4x2	21x2	11,6
GEO 500-2GQR 10-14	0,75x2	1,6x2	24x2	13,5
GEO 500-2GQR 10-16	0,9x2	2,3x2	27x2	15,5
GEO 500-2GQR 10-18	1,1x2	2,8x2	30x2	17,5
GEO 500-2GQR 10-20	1,5x2	3,8x2	30x2	19,5

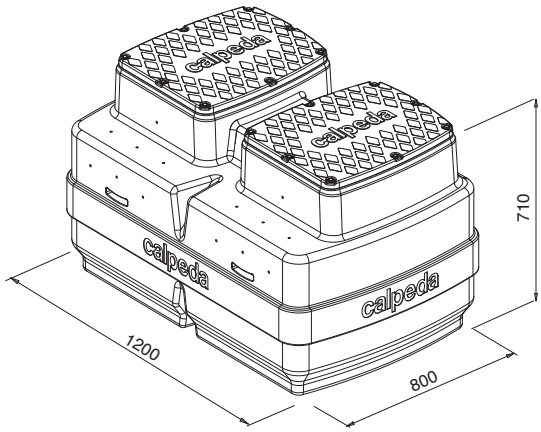

GQR

Single-impeller submersible drainage pump, with vertical delivery port.
GQR: with open impeller.
2-pole induction motor, 50Hz (n ≈ 2900 rpm),
GQR: three-phase 400 V +/-10%;
GQRM: Single-phase 230 V +/-10% with thermal protector and incorporated capacitor (without float switch).
Cable length 10 m.
Liquid temperature up to 35 °C.

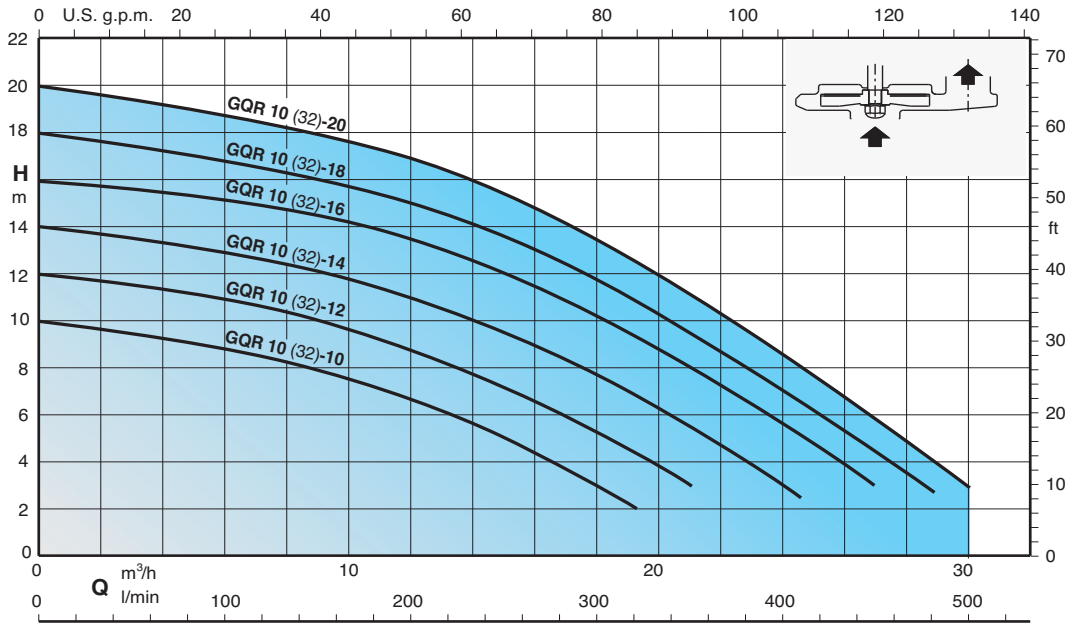

CALPEDA ROMANIA - INFINITY PUMPS SRL
Tel: 0268.33.47.47 / 0722.244.944
vanzari@calpeda.ro | www.calpeda.ro

GEO 500

Automatic waste water collecting and lifting station

Pumps characteristics

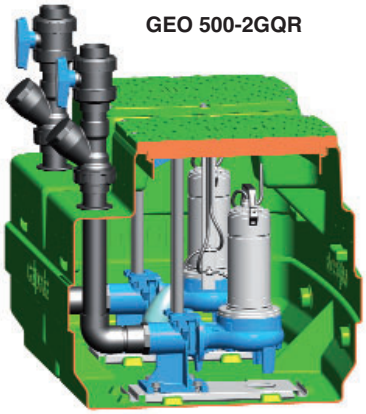

GEO 500-2GQR

Features
Automatic waste water collecting and lifting station with GQR pump series.

It includes:
1 tank capacity 500 l
2 pumps - single-phase 10 m cable without float switch
- three-phase with 10 cable
1 support kit with 2 float switch
1 control box
2 duck foot coupling kit
2 discharge pipe kit Ø 63 mm in PVC with a ball valve and non-return ball valve

On demand
1 safety float switch and auto-supplied control panel for remote alarm with horn and flashing light
- extention 300 mm

Single-phase type	1 ~ 230 V		Q max	H max
	kW	A	m³/h	m
GEO 500-2GQRM 10 32-10	0,45x2	3,1x2	18x2	9,5
GEO 500-2GQRM 10 32-12	0,55x2	3,6x2	21x2	11,6
GEO 500-2GQRM 10 32-14	0,75x2	4,6x2	24x2	13,5
GEO 500-2GQRM 10 32-16	0,9x2	6x2	27x2	15,5
GEO 500-2GQRM 10 32-18	1,1x2	8x2	30x2	17,5
GEO 500-2GQRM 10 32-20	1,5x2	13x2	30x2	19,5

Three-phase type	3 ~ 400 V		Q max	H max
	kW	A	m³/h	m
GEO 500-2GQR 10 32-10	0,45x2	1,2x2	18x2	9,5
GEO 500-2GQR 10 32-12	0,55x2	1,4x2	21x2	11,6
GEO 500-2GQR 10 32-14	0,75x2	1,6x2	24x2	13,5
GEO 500-2GQR 10 32-16	0,9x2	2,3x2	27x2	15,5
GEO 500-2GQR 10 32-18	1,1x2	2,8x2	30x2	17,5
GEO 500-2GQR 10 32-20	1,5x2	3,8x2	30x2	19,5

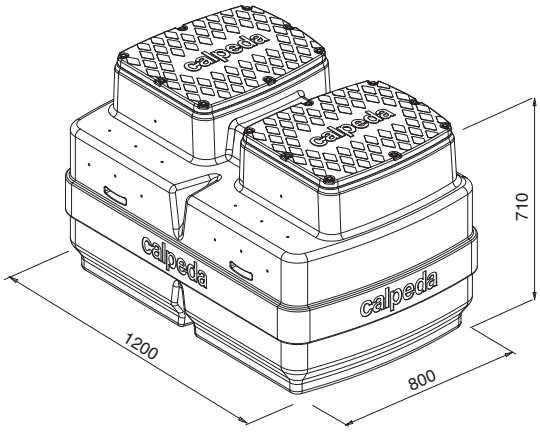

GQR
Single-impeller submersible drainage pump, with horizontal delivery port.
GQR: with open impeller.
2-pole induction motor, 50Hz (n ≈ 2900 rpm),
GQR: three-phase 400 V +/-10%;
GQRM: single-phase 230 V +/-10%, with thermal protector, with built-in capacitor (without float switch).
10 m cable.
Liquid temperature up to 35 °C

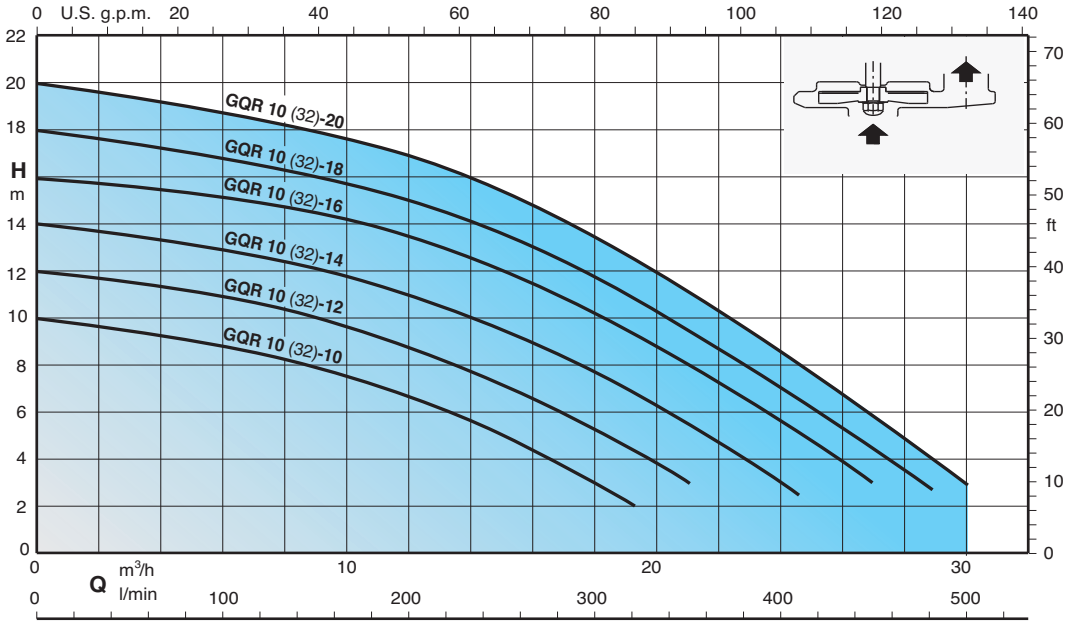

CALPEDA ROMANIA - INFINITY PUMPS SRL
Tel: 0268.33.47.47 / 0722.244.944
vanzari@calpeda.ro | www.calpeda.ro

GEO 500

Automatic waste water collecting and lifting station

Pumps characteristics

GEO 500-2GX..

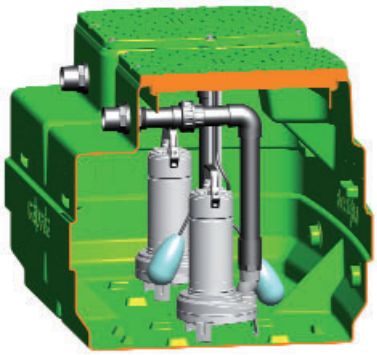

Features

Automatic waste water collecting and lifting station with GX 40 pump series.

It includes:

1 tank capacity 500 l
2 pumps - single-phase with 10 m cable without float switch
- three-phase with 10 m cable
1 support kit with 2 float switch
1 electric control box
2 discharge pipe kit Ø 50 mm in PVC

On demand

2 discharge pipe kit Ø 50 mm in PVC with a ball valve and non-return ball valve
1 safety float switch and auto-supplied control panel for remote alarm with horn and flashing light
- extention 300 mm

Single-phase type	1 ~ 230 V		Q max	H max
	kW	A	m³/h	m
GEO 500-2GXCM 40-10	0,55x2	4,6x2	21x2	9
GEO 500-2GXCM 40-13	0,9x2	6,6x2	26x2	11,6
GEO 500-2GXVM 40-7	0,55x2	4,6x2	15x2	6,2
GEO 500-2GXVM 40-8	0,75x2	5,4x2	18x2	7,2
GEO 500-2GXVM 40-8	0,9x2	6x2	21x2	8,1

Three-phase type	3 ~ 400 V		Q max	H max
	kW	A	m³/h	m
GEO 500-2GXC 40-10	0,55x2	1,6x2	21x2	9
GEO 500-2GXC 40-13	0,9x2	2,3x2	26x2	11,6
GEO 500-2GXV 40-7	0,55x2	1,6x2	15x2	6,2
GEO 500-2GXV 40-8	0,75x2	2,2x2	18x2	7,2
GEO 500-2GXV 40-9	0,9x2	2,3x2	21x2	8,1

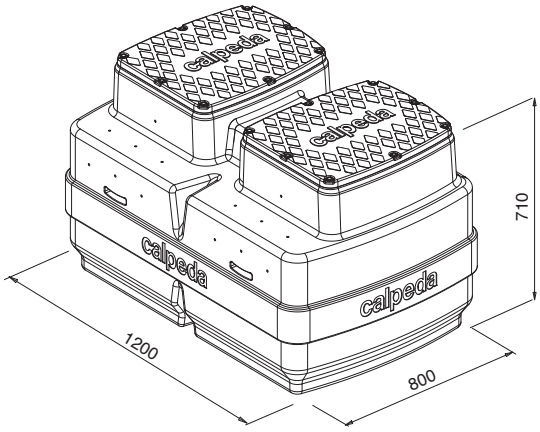

GXC, GXV

Submersible sewage and drainage pumps in chrome-nickel stainless steel, with vertical delivery port.
GXC, with single-channel impeller.
GXV: with free-flow (vortex) impeller
2-pole induction motor, 50Hz (n ≈ 2900 rpm).
GXC, GXV: three-phase 400 V +/-10%;
GXCM, GXVM: single-phase 230 V +/-10%, with thermal protector and incorporated capacitor (without float switch).
Cable length 10 m.
Liquid temperature up to 35 °C

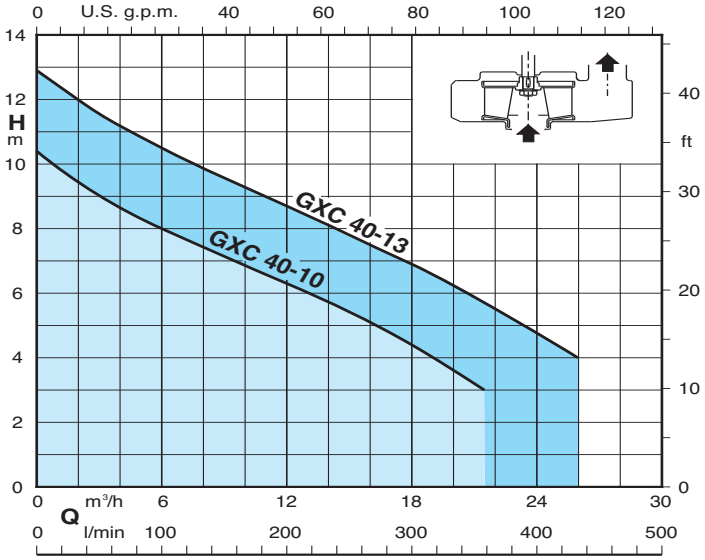

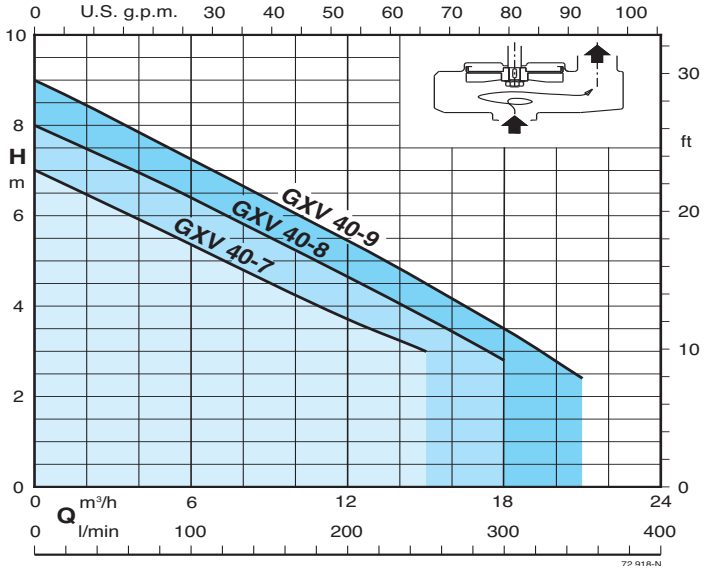

CALPEDA ROMANIA - INFINITY PUMPS SRL
Tel: 0268.33.47.47 / 0722.244.944
vanzari@calpeda.ro | www.calpeda.ro

GEO 500

Automatic waste water collecting and lifting station

Pumps characteristics

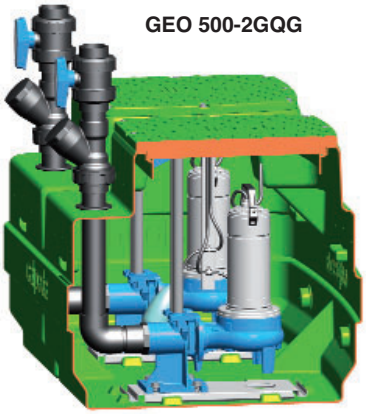

GEO 500-2GQG

Features

Automatic sewage water collecting and lifting station with grinder pumps GQG series.

It includes:

1 tank capacity 500 l
2 pumps - single-phase 10 m cable without float switch
- three-phase with 10 cable
1 support kit with 2 float switch
1 electric control box (with capacitor for single-phase motors)
2 duck foot coupling kit
2 discharge pipe kit Ø 63 mm in PVC with a ball valve and non-return ball valve

On demand

1 safety float switch and auto-supplied control panel for remote alarm with horn and flashing light
- extension 300 mm

Single-phase type	1 ~ 230 V		Q max	H max
	kW	A	m³/h	m
GEO 500-2GQGM 6-18	0,9x2	7x2	13,2x2	16,5
GEO 500-2GQGM 6-21	1,1x2	7,5x2	15x2	19,2
GEO 500-2GQGM 6-25	1,5x2	9,5x2	16,8x2	23

Three-phase type	3 ~ 400 V		Q max	H max
	kW	A	m³/h	m
GEO 500-2GQG 6-18	0,9x2	2,3x2	13,2x2	16,5
GEO 500-2GQG 6-21	1,1x2	2,8x2	15x2	19,2
GEO 500-2GQG 6-25	1,5x2	3,8x2	16,8x2	23

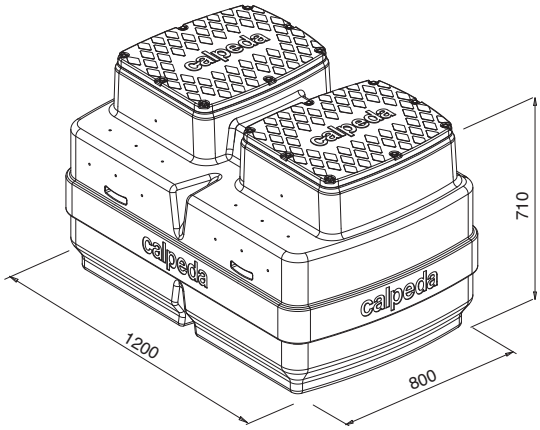

GQG

Submersible pumps with high power grinder, with horizontal delivery port.
2-pole induction motor, 50Hz (n ≈ 2900 rpm)
GQG: three-phase 400 V +/-10%;
GQGM: Single-phase 230 V +/-10% complete control box with thermal protector and capacitors (without float switch).
10 m cable.
Liquid temperature up to 35 °C.

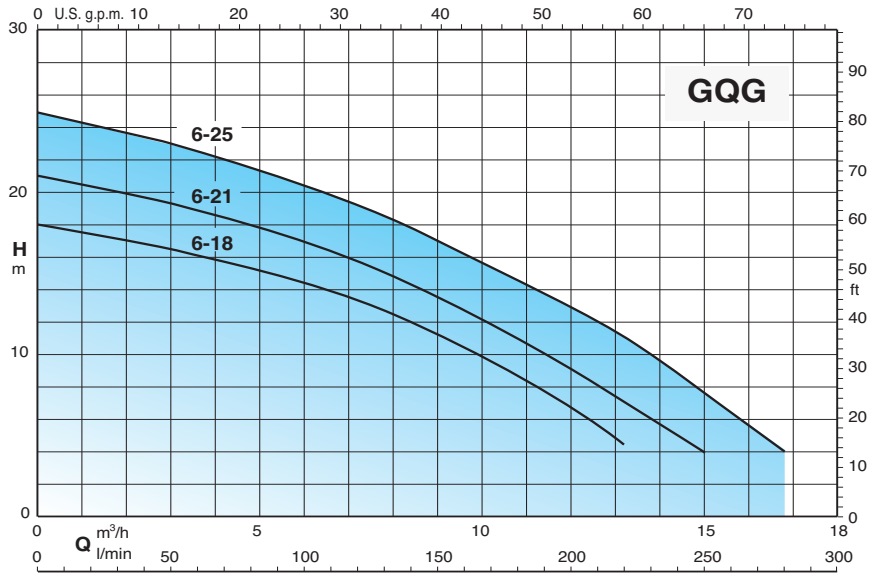

CALPEDA ROMANIA - INFINITY PUMPS SRL
Tel: 0268.33.47.47 / 0722.244.944
vanzari@calpeda.ro | www.calpeda.ro

GEO 500

Automatic waste water collecting and lifting station

Pumps characteristics

GEO 500-2GQS

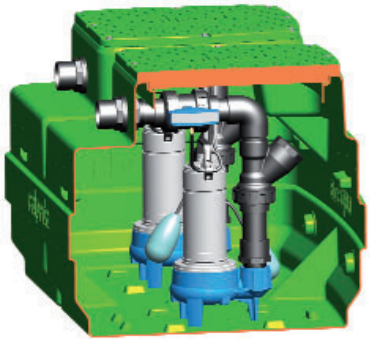

Features
Automatic waste water collecting and lifting station GQS series.

It includes:
1 tank capacity 500 l
2 pumps - single-phase 10 m cable without float switch
- three-phase with 10 cable
1 support kit with 2 float switch
1 control box for three-phase version
2 discharge pipe kit Ø 63 mm in PVC with a ball valve and non-return ball valve

On demand
1 safety float switch and auto-supplied control panel for remote alarm with horn and flashing light
- extention 300 mm

Single-phase type	1 ~ 230 V		Q max	H max
	kW	A	m³/h	m
GEO 500-2GQSM 50-8	0,55x2	4,3x2	24x2	7,4
GEO 500-2GQSM 50-9	0,75x2	4,8x2	27x2	8,8
GEO 500-2GQSM 50-11	0,9x2	6,6x2	33x2	10,5
GEO 500-2GQSM 50-13	1,1x2	8,4x2	36x2	12,5
GEO 500-2GQSM 50-15	1,5x2	13x2	36x2	14,4

Three-phase type	3 ~ 400 V		Q max	H max
	kW	A	m³/h	m
GEO 500-2GQS 50-8	0,55x2	1,5x2	24x2	7,4
GEO 500-2GQS 50-9	0,75x2	1,8x2	27x2	8,8
GEO 500-2GQS 50-11	0,9x2	2,3x2	33x2	10,5
GEO 500-2GQS 50-13	1,1x2	3x2	36x2	12,5
GEO 500-2GQS 50-15	1,5x2	4x2	36x2	14,4

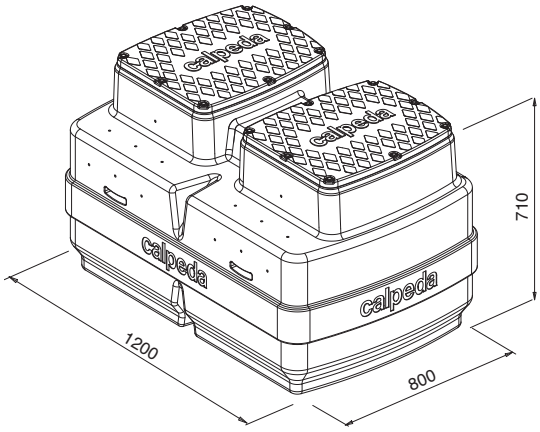

GQS
Single-impeller submersible pumps, with vertical delivery port.
GQS: with free-flow (vortex) impeller
2-pole induction motor, 50Hz (n ≈ 2900 rpm)
GQS: three-phase 400 V +/-10%;
GQSM: single-phase 230 V +/-10%, with thermal protector, with built-in capacitor (without float switch).
10 m cable.
Liquid temperature up to 35 °C

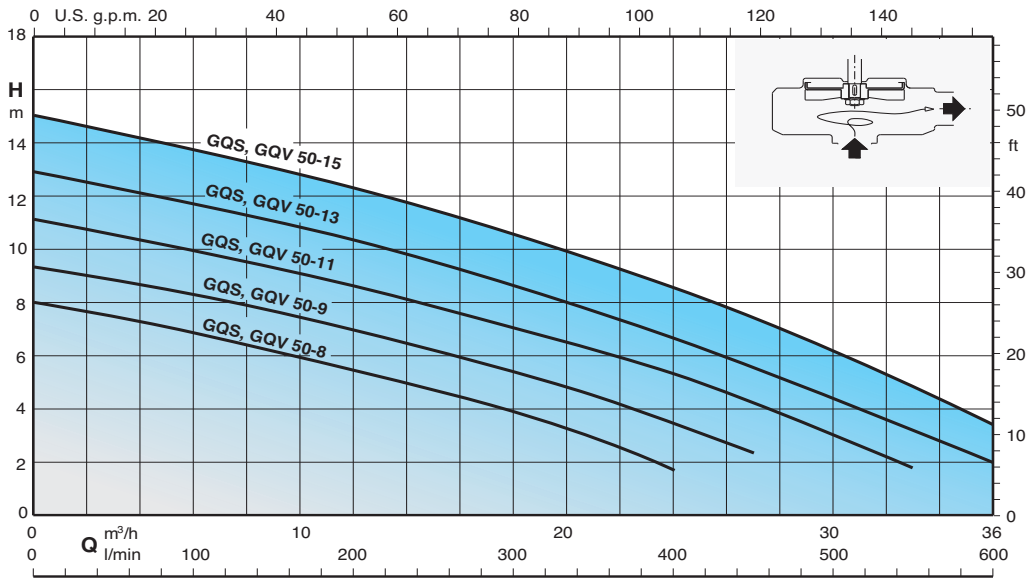

CALPEDA ROMANIA - INFINITY PUMPS SRL
Tel: 0268.33.47.47 / 0722.244.944
vanzari@calpeda.ro | www.calpeda.ro

GEO 500

Automatic waste water collecting and lifting station

Pumps characteristics

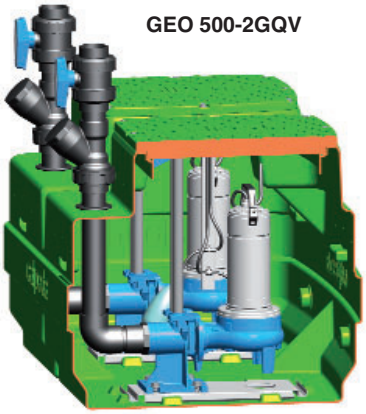

GEO 500-2GQV

Features

Automatic waste water collecting and lifting station with GQV pump series.

It includes:

1 tank capacity 500 l
2 pumps - single-phase 10 m cable without float switch
- three-phase with 10 cable
1 support kit with 2 float switch
1 control box
2 duck foot coupling kit
2 discharge pipe kit Ø 63 mm in PVC with a ball valve and non-return ball valve

On demand

1 safety float switch and auto-supplied control panel for remote alarm with horn and flashing light
- extention 300 mm

Single-phase type	1 ~ 230 V		Q max	H max
	kW	A	m³/h	m
GEO 500-2GQVM 50-8	0,55x2	4,3x2	24x2	7,4
GEO 500-2GQVM 50-9	0,75x2	4,8x2	27x2	8,8
GEO 500-2GQVM 50-11	0,9x2	6,6x2	33x2	10,5
GEO 500-2GQVM 50-13	1,1x2	8,4x2	36x2	12,5
GEO 500-2GQVM 50-15	1,1x2	13x2	36x2	12,5

Three-phase type	3 ~ 400 V		Q max	H max
	kW	A	m³/h	m
GEO 500-2GQV 50-8	0,55x2	1,5x2	24x2	7,4
GEO 500-2GQV 50-9	0,75x2	1,8x2	27x2	8,8
GEO 500-2GQV 50-11	0,9x2	2,3x2	33x2	10,5
GEO 500-2GQV 50-13	1,1x2	3x2	36x2	12,5
GEO 500-2GQV 50-15	1,5x2	4x2	36x2	14,4

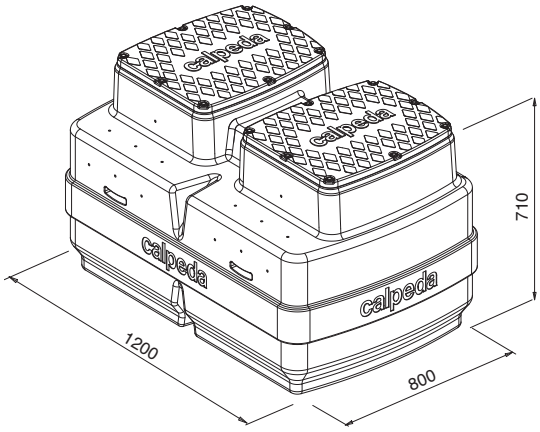

GQV

Single-impeller submersible pumps, with horizontal delivery port.
GQV: with free-flow (vortex) impeller
2-pole induction motor, 50Hz (n ≈ 2900 rpm)
GQV: three-phase 400 V +/-10%;
GQVM: single-phase 230 V +/-10%, with thermal protector, with built-in capacitor (without float switch).
10 m cable.
Liquid temperature up to 35 °C

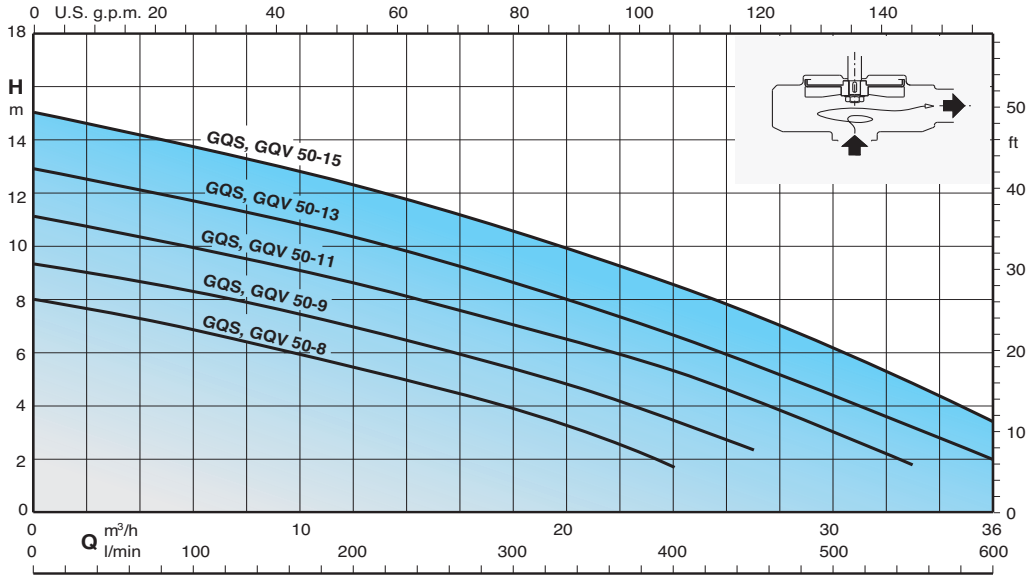

CALPEDA ROMANIA - INFINITY PUMPS SRL
Tel: 0268.33.47.47 / 0722.244.944
vanzari@calpeda.ro | www.calpeda.ro

GEO 500

Automatic waste water collecting and lifting station

Pumps characteristics

GEO 500-2GM..

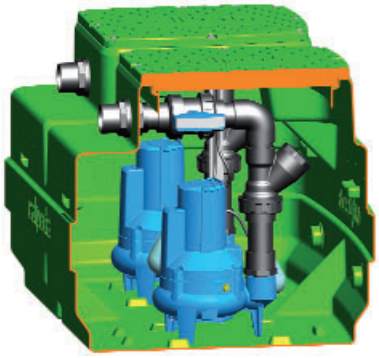

Features
Automatic waste water collecting and lifting station GMV, GMC series.

It includes:
1 tank capacity 500 l
2 pumps - single-phase 10 m cable without float switch
- three-phase with 10 cable
1 support kit with 2 float switch
1 control box for three-phase version
2 discharge pipe kit Ø 63 mm in PVC with a ball valve and non-return ball valve

On demand
1 safety float switch and auto-supplied control panel for remote alarm with horn and flashing light
- extention 300 mm

Single-phase type	1 ~ 230 V		Q max	H max
	kW	A	m³/h	m
GEO 500-2GMCM 50CE	0,75x2	4,5x2	36x2	9,5
GEO 500-2GMCM 50BE	1,1x2	6,5x2	42x2	12,5
GEO 500-2GMVM 50CE	0,75x2	4,5x2	31x2	8
GEO 500-2GMVM 50BE	1,1x2	6,5x2	35x2	9,5

Three-phase type	3 ~ 400 V		Q max	H max
	kW	A	m³/h	m
GEO 500-2GMC 50CE	0,75x2	1,9x2	36x2	9,5
GEO 500-2GMC 50BE	1,1x2	2,7x2	42x2	12,5
GEO 500-2GMC 50AE	1,5x2	3,8x2	48x2	14,5
GEO 500-2GMV 50CE	0,75x2	1,9x2	31x2	8
GEO 500-2GMV 50BE	1,1x2	2,7x2	35x2	9,5
GEO 500-2GMV 50AE	1,5x2	3,8x2	39x2	11,5

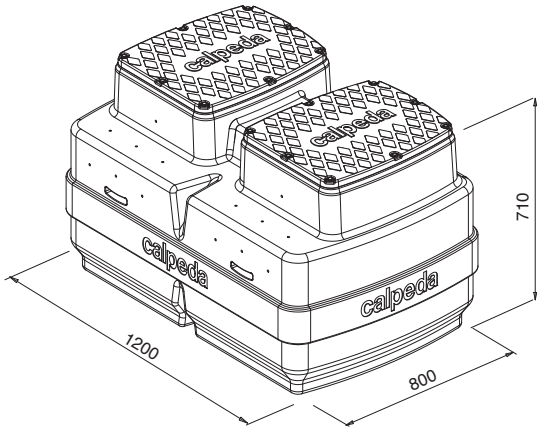

GMC, GMV
Submersible sewage and drainage pumps.
GMC, with single-channel impeller.
GMV, with free-flow (vortex) impeller.
2-pole induction motor, 50Hz (n ≈ 2900 rpm)
GMV, GMC: three-phase 400 V +/-10%;
with 2 built-in thermal protectors to be connected to the control panel.
GMVM, GMVM: single-phase 230 V ± 10%, built-in thermal protector and built-in capacitor. (without float switch)
Cable length 10 m.
Liquid temperature up to 35 °C.

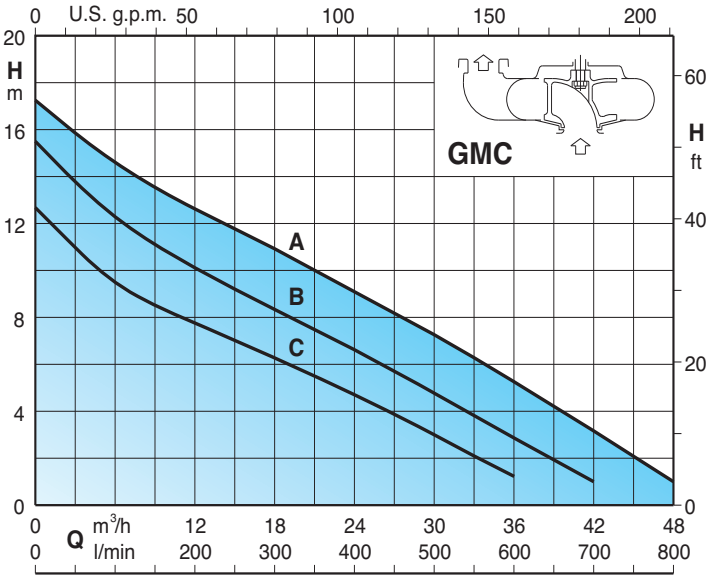

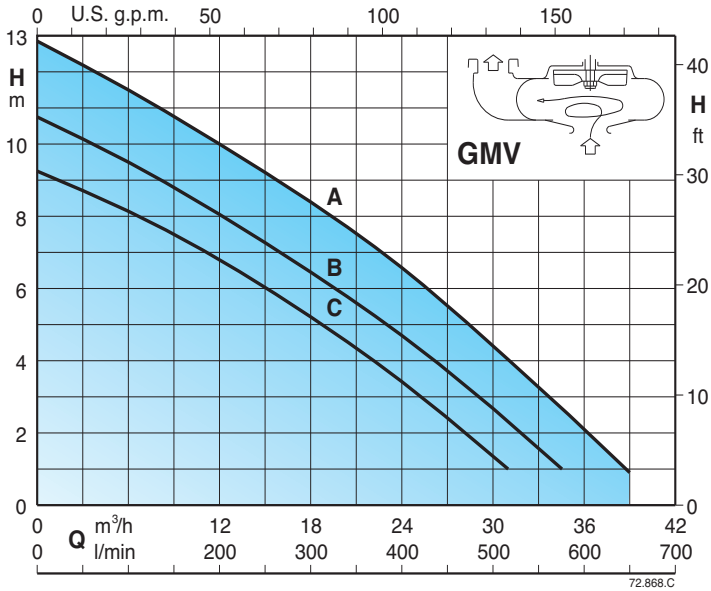

72.868.C

CALPEDA ROMANIA - INFINITY PUMPS SRL
Tel: 0268.33.47.47 / 0722.244.944
vanzari@calpeda.ro | www.calpeda.ro

GEO 500

Automatic waste water collecting and lifting station

Pumps characteristics

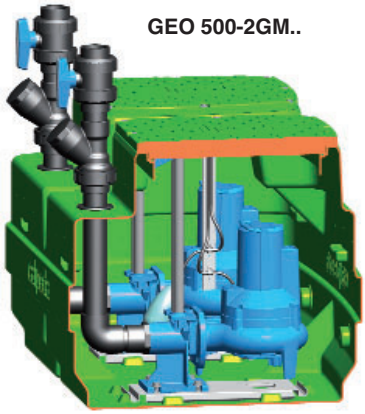

GEO 500-2GM..

Features
Automatic waste water collecting and lifting station GMV, GMC series.

It includes:
1 tank capacity 500 l
2 pumps - single-phase 10 m cable without float switch
- three-phase with 10 cable
1 support kit with 2 float switch
1 control box for three-phase version
2 duck foot coupling kit
2 discharge pipe kit Ø 63 mm in PVC with a ball valve and non-return ball valve

On demand
1 safety float switch and auto-supplied control panel for remote alarm with horn and flashing light
- extention 300 mm

Single-phase type	1 ~ 230 V		Q max	H max
	kW	A	m³/h	m
GEO 500-2GMCM 50-65C	0,75x2	4,5x2	36x2	9,5
GEO 500-2GMCM 50-65B	1,1x2	6,5x2	42x2	12,5
GEO 500-2GMVM 50-65C	0,75x2	4,5x2	31x2	8
GEO 500-2GMVM 50-65B	1,1x2	6,5x2	35x2	9,5

Three-phase type	3 ~ 400 V		Q max	H max
	kW	A	m³/h	m
GEO 500-2GMC 50-65C	0,75x2	1,9x2	36x2	9,5
GEO 500-2GMC 50-65B	1,1x2	2,7x2	42x2	12,5
GEO 500-2GMC 50-65A	1,5x2	3,8x2	48x2	14,5
GEO 500-2GMV 50-65C	0,75x2	1,9x2	31x2	8
GEO 500-2GMV 50-65B	1,1x2	2,7x2	35x2	9,5
GEO 500-2GMV 50-65A	1,5x2	3,8x2	39x2	11,5

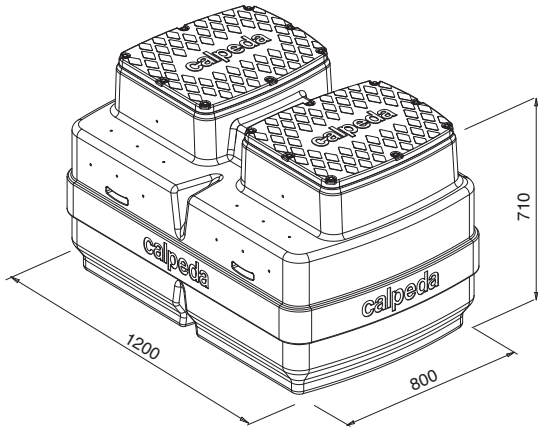

GMC, GMV
Submersible sewage and drainage pumps.
GMC, with single-channel impeller.
GMV, with free-flow (vortex) impeller.
2-pole induction motor, 50Hz (n ≈ 2900 rpm)
GMV, GMC: three-phase 400 V +/-10%;
with 2 built-in thermal protectors to be connected to the control panel.
GMVM, GMVM: single-phase 230 V ± 10%, built-in thermal protector and built-in capacitor.
(without float switch)
Cable length 10 m.
Liquid temperature up to 35 °C.

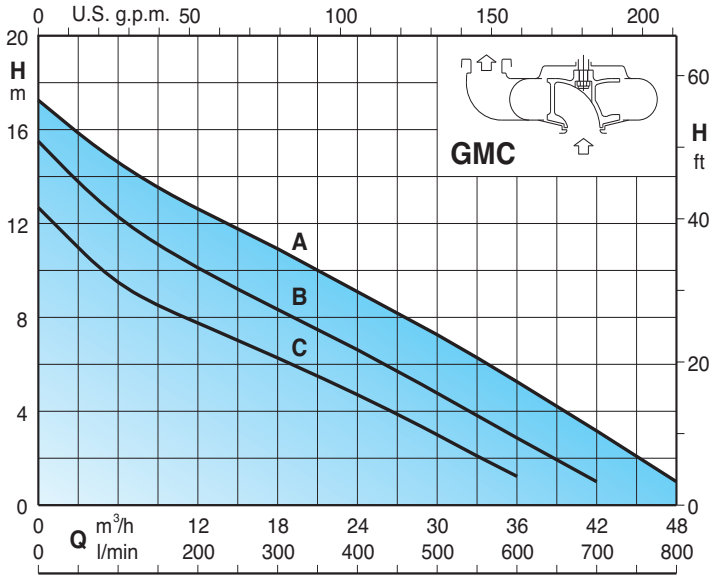

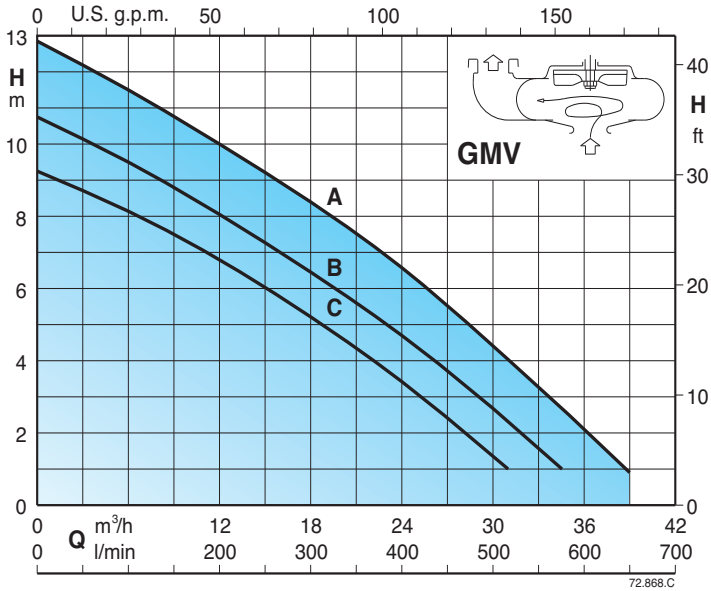

CALPEDA ROMANIA - INFINITY PUMPS SRL
Tel: 0268.33.47.47 / 0722.244.944
vanzari@calpeda.ro | www.calpeda.ro

GEO

Automatic waste water collecting and lifting station

Dimensions and weights

GEO 40

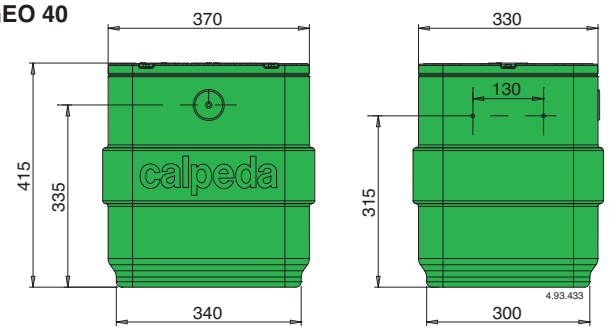

Tank
kg.6

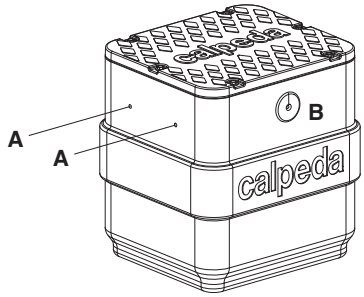

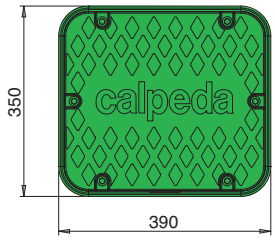

A) Arrangement for :
Ø 40 mm inlet
Ø 40 mm outlet
Ø 25 mm relief
B) Cable passage with Shuko plug

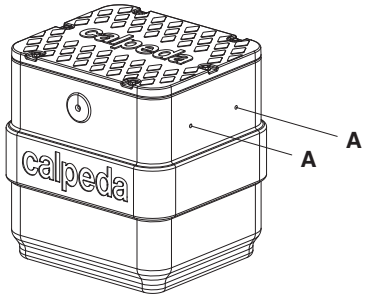

GEO 230

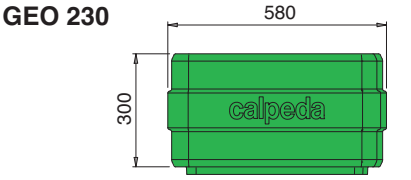

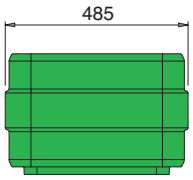

Extention
kg.4,5

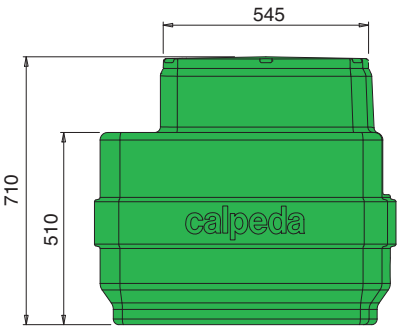

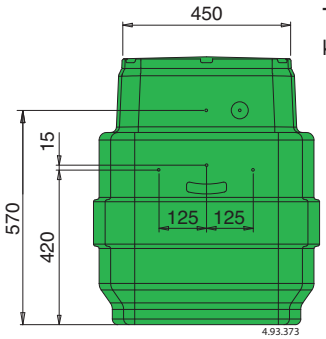

Tank
kg.16

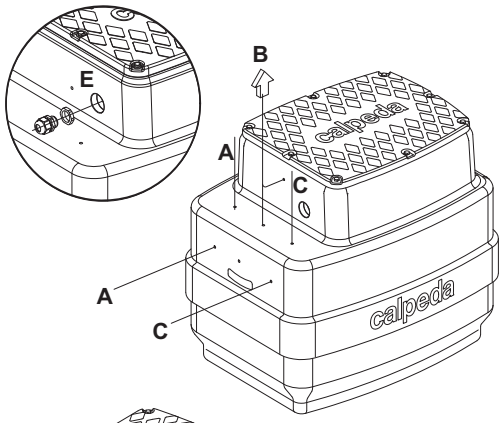

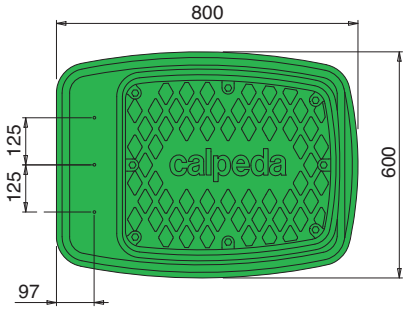

A-C) inlet and relief
B) delivery outlet
D) G 1 1/2 draining outlet
E) Cable outlet

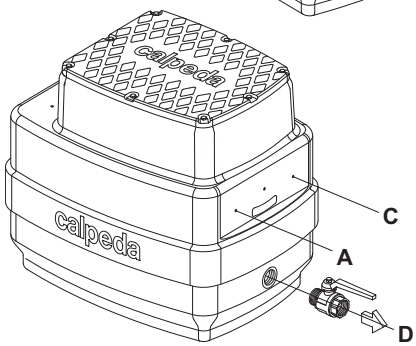

CALPEDA ROMANIA - INFINITY PUMPS SRL
Tel: 0268.33.47.47 / 0722.244.944
vanzari@calpeda.ro | www.calpeda.ro

GEO

Automatic waste water collecting and lifting station

Dimensions and weights

GEO 500

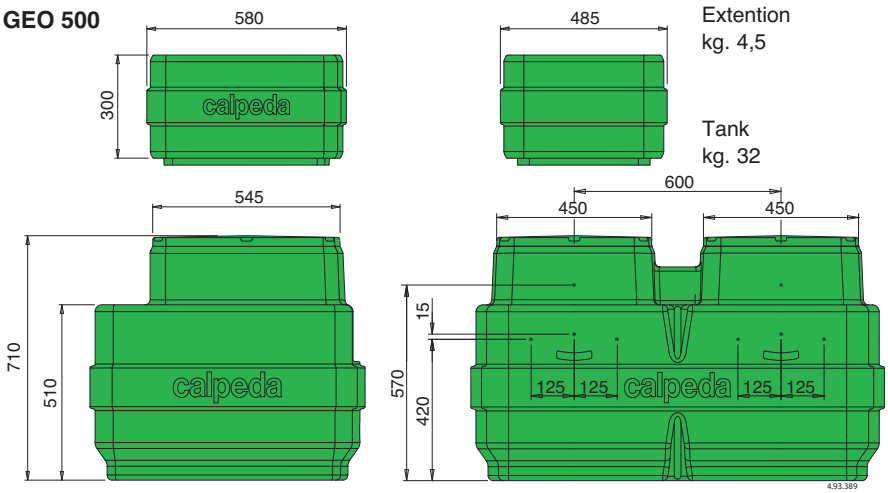

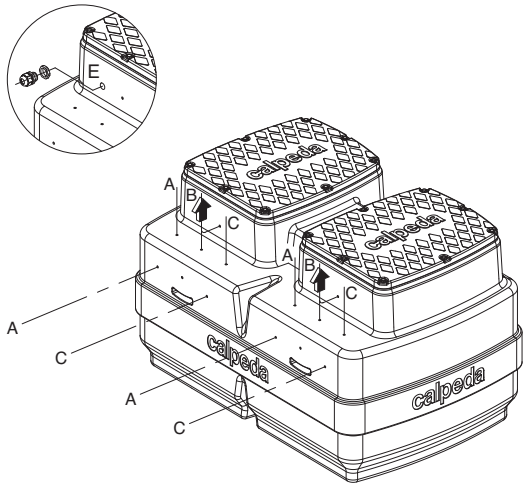

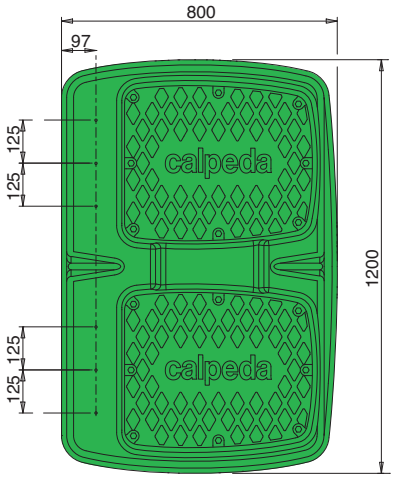

A-C) inlet and relief
B) delivery outlet
D) G 1 1/2 draining outlet
E) Cable outlet

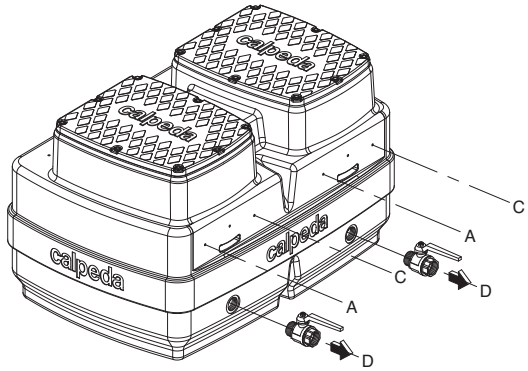

Installation examples

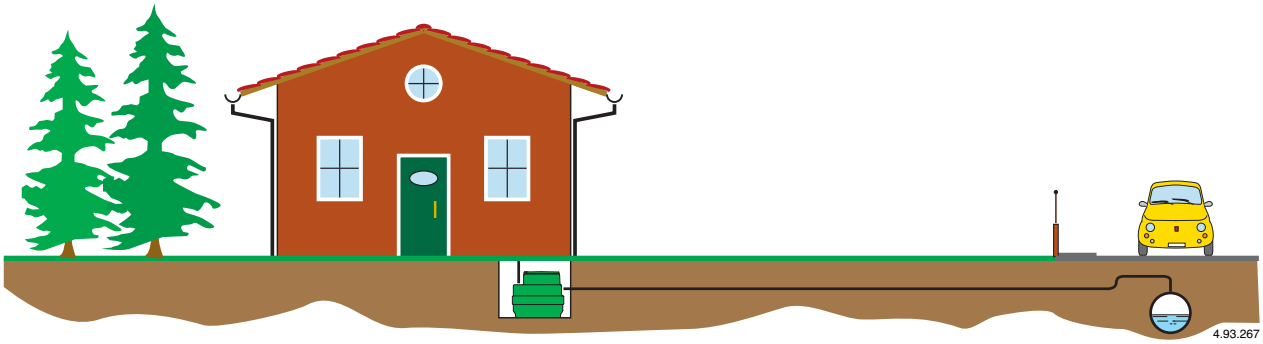

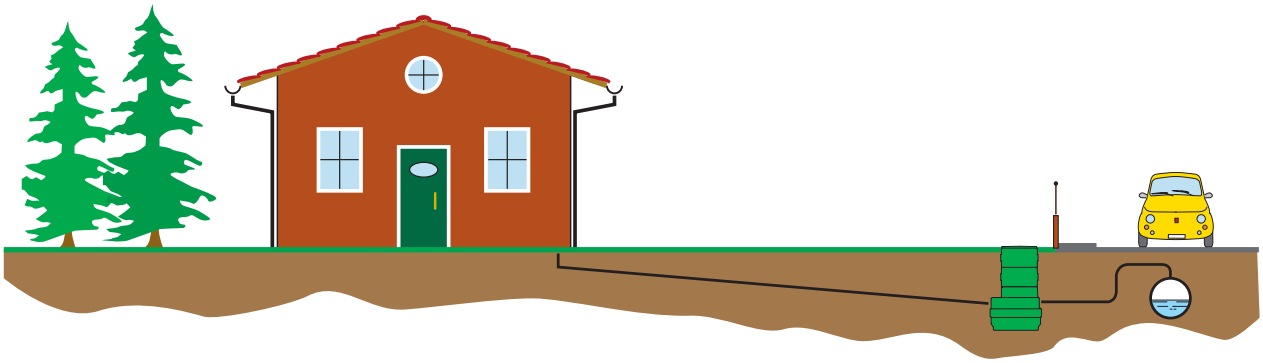

CALPEDA ROMANIA - INFINITY PUMPS SRL
Tel: 0268.33.47.47 / 0722.244.944
vanzari@calpeda.ro | www.calpeda.ro

LIFTING STATION SIZING

Normally the domestic waste water flows by gravity into the mains sewage collectors.
If there are underground rooms with discharge positions below the sewage main, a lifting station with one or more pumps may be required.
It is necessary to remember that the UNI-EN 12056-4 standard allows rainwater to be pumped to the sewage main only in exceptional cases.
To sizing a lifting station pump it is necessary to calculate the flow Qtot and the Head hmt necessary for the water drainage.

FLOW CALCULATION

The flow of the lifting pumps can be calculated using Table1, according to the number of people using the building and the location of the building. It is easy to calculate the flow Qr of the sewage water.
The Qr value is already adjusted by a coefficient that includes the peak hours, when the water consumption is higher.

The lifting systems of waste water are usually separated from the rainwater system. In case of a mixed system is required to sum the flow Qm of the rainwater of the Table 2 with the flow Qr of the Table 1.

The table indicates the rainwater flow Qm as a function of the exposed surface to rainfall, it varies according to the capacity of the surface to absorb rain water (Table 3).
The total flow of the pump or pumps is:

Qtot = Qr + Qm

HEAD CALCULATION

To calculate the head hmt it is necessary to add the geodetic head existing between the fluid levels with the head losses from internal friction created by the flow of the fluid in the hydraulic pipes and fittings (Figure 1).

After the choice of the discharge pipe diameter, such that the flow speed it is not lower than 0,7 m/s (to avoid deposits) and higher than 2,3 m/s, it is possible to determine the distributed head loss Hd and concentrated head loss Hv Hc, due to valves and curves (Table 4).

The sum of the head losses DPC is:

Δpc = Hd+ΣHv+ ΣHc

The total head hmt is calculated as:

Hmt = Hg + Δpc

Table 1
Maximum flow of domestic waste water at peak demand

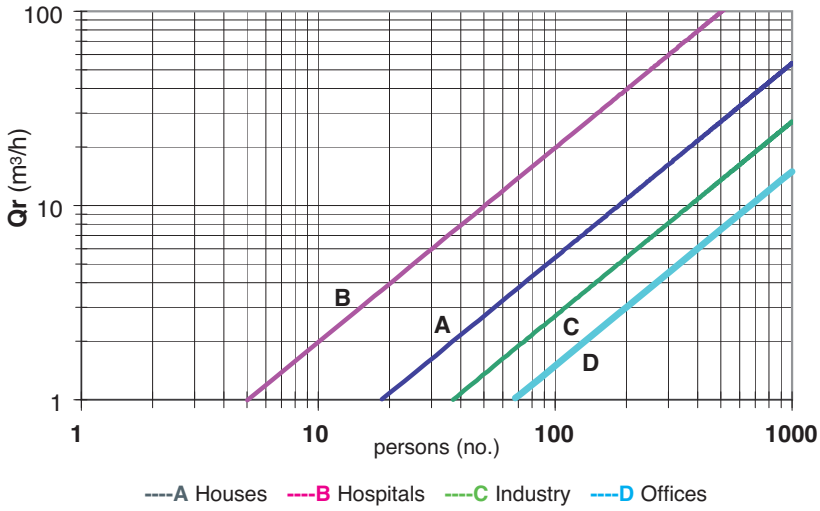

Table 2
Rainwater Flow

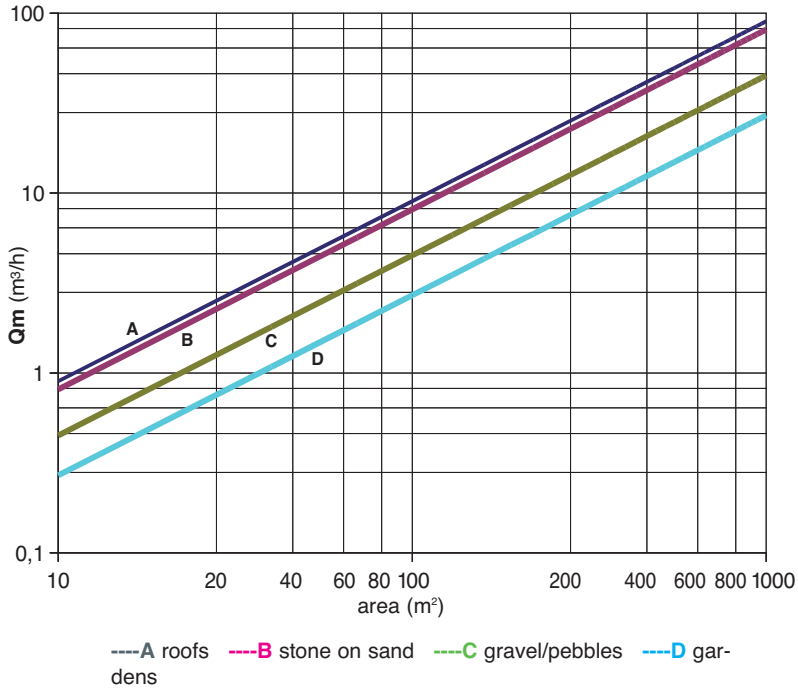

Figure 1

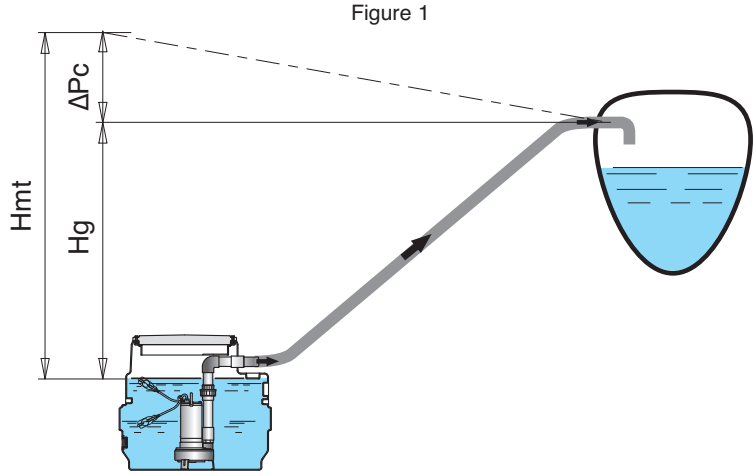

1) Water arriving from sinks discharge, toilets, showers, washing machines etc.
2) Excluding consumption from industrial processes.
3) The unit flow reference is 1,5 l/min/m²

CALPEDA ROMANIA - INFINITY PUMPS SRL
Tel: 0268.33.47.47 / 0722.244.944
vanzari@calpeda.ro | www.calpeda.ro

GEO

Technical appendix

Table no. 3
Head loss in m for PVC PN6 (m) pipes

PVC pipe PN6 Øe mm	Q m³/h	1,8	3,6	5,4	7,2	9	18	27	36	50,4	64,8	90	126	162	180
	Q l/min	30	60	90	120	150	300	450	600	840	1080	1500	2100	2700	3000
50	HL v m/100m m/s	0,24 0,30	0,85 0,59	1,8 0,89	3,1 1,18	4,6 1,48	16,7 2,96	35,3 4,44	- -	- -	- -	-	- -	- -	- -
63		0,08 0,18	0,26 0,37	0,56 0,55	0,95 0,73	1,11 0,92	5,2 1,83	10,9 2,75	18,6 3,66	34,8 5,13	- -	-	- -	- -	- -
75			0,11 0,26	0,24 0,39	0,4 0,51	0,61 0,64	2,2 1,29	4,6 1,93	7,9 2,57	14,7 3,6	23,4 4,63	43 6,43	- -	- -	- -
90			0,05 0,18	0,1 0,27	0,16 0,36	0,25 0,45	0,9 0,89	1,9 1,34	3,3 1,79	6,1 2,5	9,7 3,22	17,8 4,47	33,2 6,26	- -	- -
110				0,04 0,17	0,06 0,2	0,09 0,29	0,3 0,58	0,67 0,87	1,15 1,16	2,15 1,63	3,4 2,10	6,25 2,91	11,7 4,08	18,5 5,24	22,5 5,82
125					0,03 0,18	0,05 0,23	0,17 0,45	0,36 0,68	0,6 0,90	1,15 1,26	1,84 1,63	3,37 2,26	6,3 3,16	10 4,06	12,2 4,52
140						0,03 0,18	0,1 0,36	0,2 0,54	0,35 0,72	0,65 1,01	1,05 1,30	1,95 1,80	3,6 2,52	5,77 3,24	7 3,60
160							0,05 0,28	0,11 0,41	0,18 0,55	0,34 0,77	0,55 0,99	1,02 1,38	1,9 1,93	3 2,48	3,66 2,76
180							0,03 0,22	0,06 0,33	0,1 0,43	0,19 0,61	0,31 0,78	0,57 1,09	1,06 1,52	1,69 1,96	2,05 2,17
200							0,02 0,18	0,04 0,26	0,06 0,35	0,12 0,49	0,18 0,63	0,34 0,88	0,64 1,23	1 1,59	1,23 1,76
225								0,02 0,21	0,04 0,28	0,07 0,39	0,1 0,55	0,19 0,70	0,36 0,97	0,57 1,25	0,7 1,39
250									0,02 0,23	0,04 0,32	0,06 0,41	0,12 0,56	0,22 0,79	0,34 1,02	0,42 1,13
280									0,01 0,18	0,02 0,25	0,04 0,32	0,07 0,45	0,13 0,63	0,2 0,81	0,24 0,90

Table no. 4
Head loss in cm for bends and gate valves

Water flow velocity	α = 90 sweep elbow					Gate valves
m/sec.	d/R = 0,4	d/R = 0,6	d/R = 0,8	d/R = 1	d/R = 1,5	
0,4	0,11	0,13	0,16	0,23	0,43	0,23
0,5	0,18	0,21	0,26	0,37	0,67	0,37
0,6	0,25	0,29	0,36	0,52	0,97	0,52
0,7	0,34	0,40	0,48	0,70	1,35	0,70
0,8	0,45	0,53	0,64	0,93	1,7	0,95
0,9	0,57	0,67	0,82	1,18	2,2	1,20
1,0	0,7	0,82	1,0	1,45	2,7	1,45
1,5	1,6	1,9	2,3	3,3	6	3,3
2,0	2,8	3,3	4,0	5,8	11	5,8
2,5	4,4	5,2	6,3	9,1	17	9,1
3,0	6,3	7,4	9	13	25	13
3,5	8,5	10	12	18	33	18
4,0	11	13	16	23	42	23
4,5	14	21	26	37	55	37
5,0	18	29	36	52	67	52

EXAMPLE OF CALCULATION

Suppose it is required to size a lifting station, for a residential building where 80 people live.
The pumps will have to lift waste water up to an additional tank located 5m higher, the linear distance between the 2 tanks is 70 m.
In addition the station will receive rainwater from 400 m2 of tarmac, roof surfaces and 120 m2 of garden.

Considering: **Q tot = Qr + Qm**

It is possible to calculate the Qr from the Table1 which is 4 m3/h, while Qm is obtained from the Table 2 and is 36 m3/h (roofs and tarmac) plus 2 m3/h from gardens, with this value Qtot is 42 m3/h. At this flow it will be necessary split the flow between two pumps.
We choose a delivery pipe diameter such that the flow rate with two pumps in operation does not exceed 2.3 m / sec and not be lower than 0.7 m / s with a single pump.

From (Table 3) we obtain:
42 m³/h => 1,4 m/s => TUBO DN 110 (with two pumps in parallel operation)
21 m³/h => 0,7 m/s => TUBO DN 110 (with one operating pump)

The distributed head loss in 70 m pipe with 720 l / min is 1.13 m (Table 3), then from the formula:

Hmt = Hg + Δpc

It is obtained Hmt = 6,13 mca

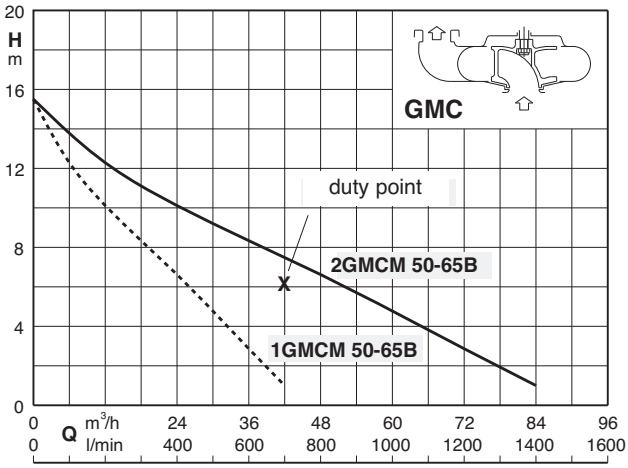

he suitable pumps are no. 2 GMCM 50-65B and then it result a station type **GEO 500-2GMCM 50-65B**.

INSTALLATION EXAMPLE

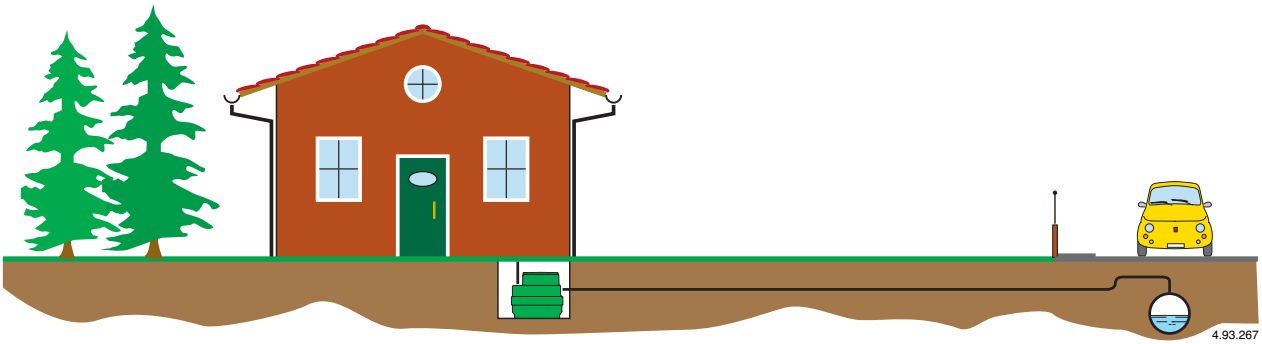

CALPEDA ROMANIA - INFINITY PUMPS SRL
Tel: 0268.33.47.47 / 0722.244.944
vanzari@calpeda.ro | www.calpeda.ro

MP

Multi-stage submersible clean water pumps

Construction

Multi-stage centrifugal submersible pumps with pump jacket in chrome-nickel stainless steel, with vertical delivery port.
Motor cooled by the pumped water passing between the motor jacket and the external jacket.
Double shaft seal with oil chamber.

Applications

- For clean water containing solids up to 2 mm grain size.
- For draining rooms or or emptying tanks.
- Extraction of water from ponds, streams or pits and for rainwater collection.
- For irrigation purposes.

For outdoor use a power supply cable of not less than 10 m should be used in accordance with: EN 60 335-2-41.

Operating conditions

Liquid temperature up to 35° C.
Maximum immersion depth: 5 m.
Minimum water level with float 100 mm.
Continuous duty.

Motor

2-pole induction motor, 50 Hz (n ≈ 2900 rpm).
MP: three-phase 230 V ± 10%;
three-phase 400 V ± 10%;
MPM: single-phase 230 V,
with float switch and thermal protector.
Incorporated capacitor.
Insulation class F.
Protection IP X8 (for continuous immersion)
Double impregnation humidity-proof dry winding.
Constructed in accordance with: EN 60034-1;
EN 60335-1, EN 60335-2-41.

Materials

Component	Material
Pump casing Impeller Stage casing	PPO-GF20 (Noryl)
Motor jacket Pump jacket	Chrome-nickel steel 1.4301 EN 10088 (AISI 304)
Strainer Handle	Polypropylene
Shaft	Chrome-nickel steel 1.4305 EN 10088 (AISI 303)
Mechanical seal	Ceramic alumina/Carbon/NBR
Seal lubrication oil	Oil for food/pharmaceutical machinery

Other features on request

- Other voltages.
- Frequency 60 Hz (as per 60 Hz data sheet).
- Other mechanical seal.
- Cable length 10 m.
- Vertical magnetic float switch.
- Motor suitable for operation with frequency converter.

Coverage chart n ≈ 2900 rpm

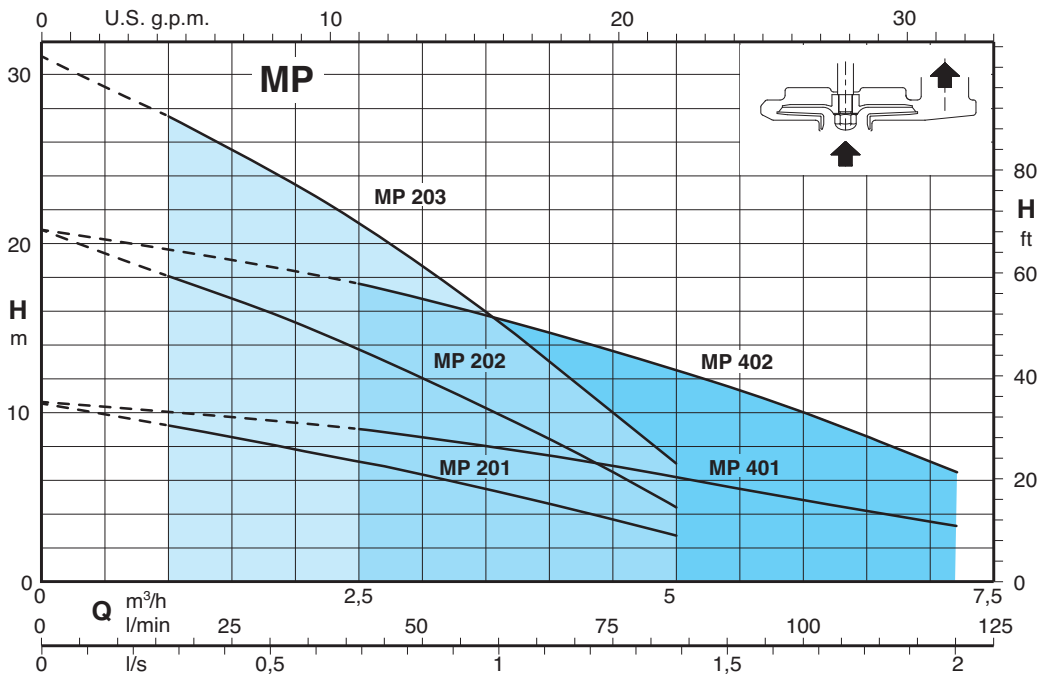

CALPEDA ROMANIA - INFINITY PUMPS SRL
Tel: 0268.33.47.47 / 0722.244.944
vanzari@calpeda.ro | www.calpeda.ro

MP

Multi-stage submersible clean water pumps

Performance n ≈ 2900 rpm

3~	230V	400V	1~	230V	Capacitor		P1	P2		Q m³/h	0	1	1,5	2	2,5	3	3,5	4	4,5	5
	A	A		A	µf	Vc	kW	kW	HP	l/min	0	16,6	25	33,3	41,6	50	58,3	66,6	75	83,3
MP 201	1,6	0,9	**MPM 201**	2,3	8	450	0,5	0,25	0,34		10,5	9,2	8,5	7,8	7,1	6,3	5,5	4,6	3,7	2,7
MP 202	1,6	0,9	**MPM 202**	2,3	8	450	0,5	0,25	0,34	**H** m	20,7	18	16,7	15,3	13,7	12	10,2	8,4	6,4	4,4
MP 203	2,3	1,3	**MPM 203**	3,5	12,5	450	0,7	0,37	0,5		31	27,5	25,5	23,5	21,2	18,6	16	13	10	7

3~	230V	400V	1~	230V	Capacitor		P1	P2		Q m³/h	0	2,25	3	3,5	4	4,5	5	6	7,2	-
	A	A		A	µf	Vc	kW	kW	HP	l/min	0	37,5	50	58,3	66,6	75	83,3	100	120	-
MP 401	1,6	0,9	**MPM 401**	2,3	8	450	0,5	0,25	0,34		10,6	9,2	8,5	8	7,4	6,8	6,2	4,8	3,3	-
MP 402	2,3	1,3	**MPM 402**	3,5	12,5	450	0,7	0,37	0,5	**H** m	20,8	18	16,7	15,8	14,8	13,6	12,5	10	6,5	

P1 Max. power input. P2 Rated motor power output. Density ρ = 1000 kg/m³. Kinematic viscosity ν = max 20 mm²/sec.

Tolerances according to UNI EN ISO 9906:2012

Pump type	Power supply cable				Float switch	
	Cable material	Section	Length	Plug CEE 7(VII)	Cable material	Section
MPM 201,202,401	H05RN-F	3G0,75 mm²	5 m	YES	H07RN-F	3G1 mm²
MPM 203,402	H07RN-F	3G1 mm²	5 m	YES	H07RN-F	3G1 mm²
MP 201,202,401	H05RN-F	4G0,75 mm²	5 m	NO	NO	-
MP 203,402	H07RN-F	4G1 mm²	5 m	NO	NO	-

Dimensions and weights

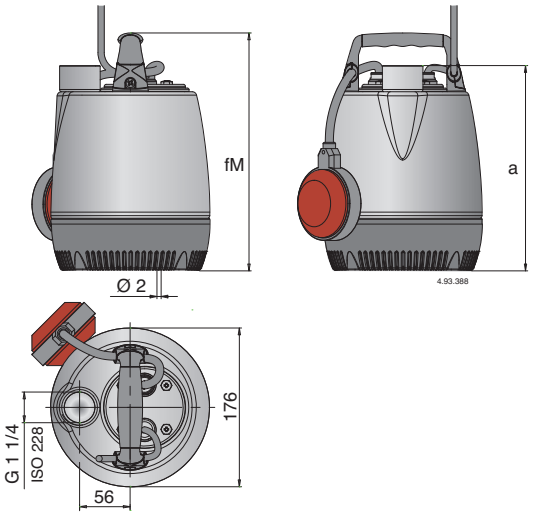

TYPE	Dimensions mm		(1) kg	
	fM	a	MP	MPM
MP 201 - MPM 201	265	230	4,7	4,9
MP 202 - MPM 202	290	255	4,8	5,2
MP 203 - MPM 203	350	315	6,4	6,7
MP 401 - MPM 401	265	230	4,7	4,9
MP 402 - MPM 402	325	290	6	6,4

(1) With cable length: 5 m

CALPEDA ROMANIA - INFINITY PUMPS SRL
Tel: 0268.33.47.47 / 0722.244.944
vanzari@calpeda.ro | www.calpeda.ro

Installation examples

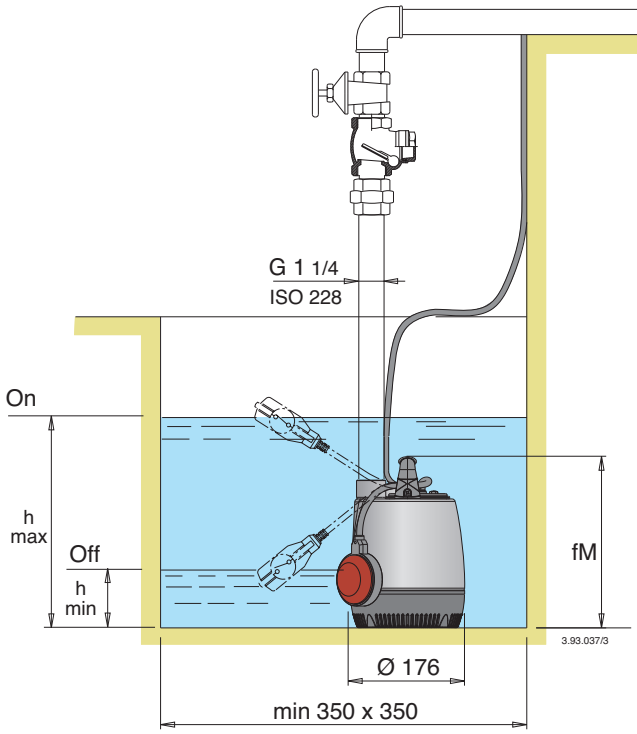

TYPE	mm	
	h min	h max
MPM 201	100	310
MPM 202	125	335
MPM 203	185	395
MPM 401	100	310
MPM 402	160	370

Installation examples with vertical magnetic float switch

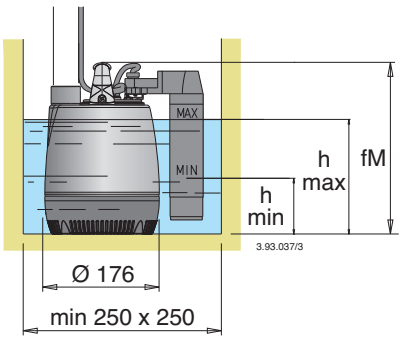

TYPE	mm	
	h min	h max
MPM 201 GF	100	190
MPM 202 GF	125	315
MPM 203 GF	185	275
MPM 401 GF	100	190
MPM 402 GF	160	250

CALPEDA ROMANIA - INFINITY PUMPS SRL
Tel: 0268.33.47.47 / 0722.244.944
vanzari@calpeda.ro | www.calpeda.ro

Features

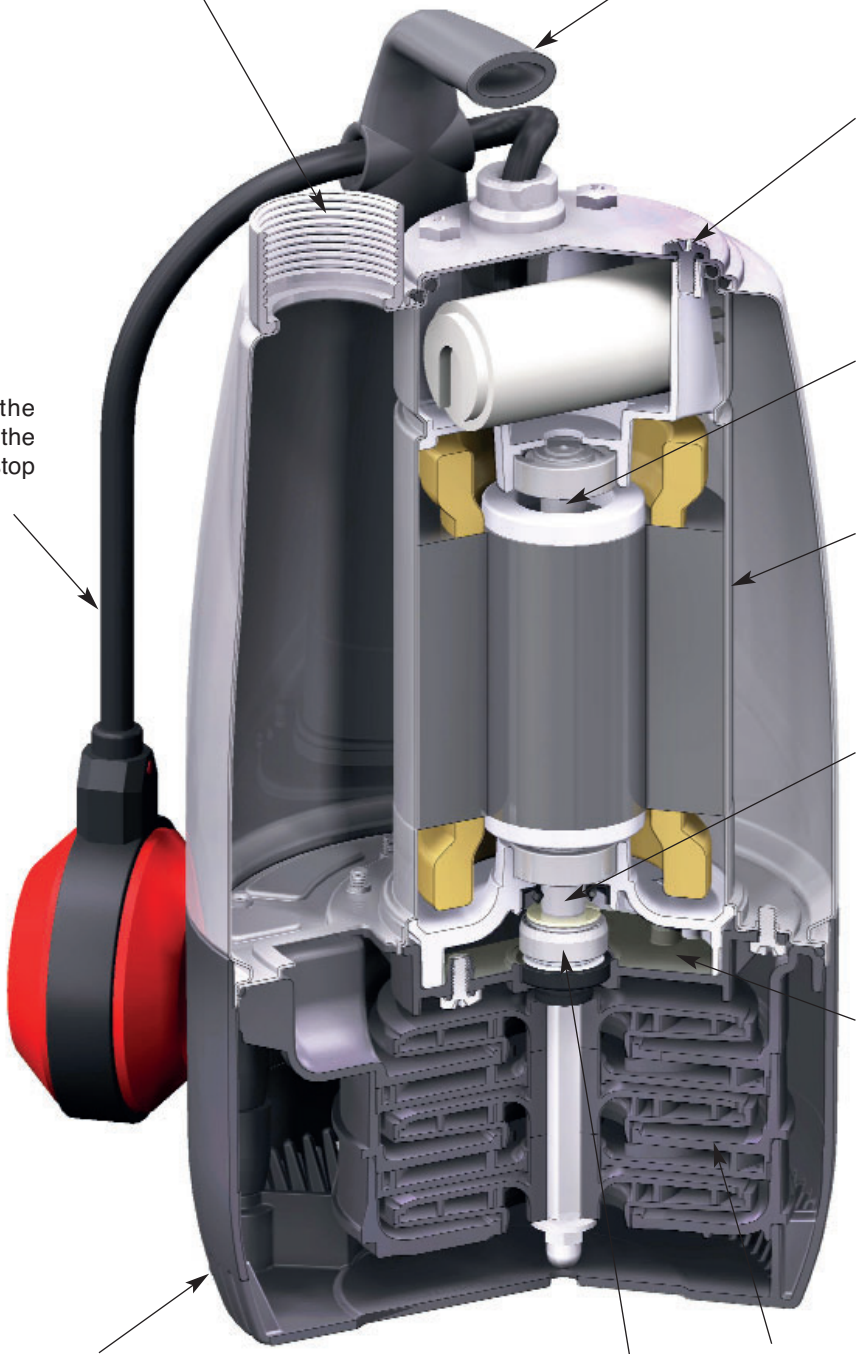

CALPEDA ROMANIA - INFINITY PUMPS SRL
Tel: 0268.33.47.47 / 0722.244.944
vanzari@calpeda.ro | www.calpeda.ro

MPS

Multi-Stage Submersible Clean Water Pumps

PATENTED

Construction

5” Close coupled multi-stage submersible pumps.
External jacket in stainless steel AISI 304 and stages Noryl.
MPSM with built-in capacitor, accessible through the delivery casing.
Hydraulics located below the motor with the motor cooled by the pumped fluid. Safe operation is possible with the motor only partially submerged.
Double shaft seal with oil chamber.
The suction strainer prevents the entrance of solids with diameter bigger than 2 mm.

Applications

For water supply from wells, tanks or reservoirs.
For domestic, civil and industrial applications, for garden use, irrigation and rain water harvesting systems.

Operating conditions

Water temperature up to 35 °C.
Minimum internal diameter of well: 140 mm.
Minimum immersion depth: 100 mm.
Maximum immersion depth: 20 m (with suitable cable length).
Continuous duty.

Motor

2-pole induction motor, 50 Hz (n ≈ 2900 1/min).
MPS : three-phase 230 V ± 10%;
three-phase 400 V ± 10%.
Cable: H07RN8-F, length 15 m, without plug.

MPSM: single-phase 230 V ± 10%, with thermal protector.
Incorporated capacitor.
Float switch MPSM.. CG (on demand)
Cable: H07RN8-F, length 15 m, with plug CEI-UNEL 47166.

Insulation class F.
Protection IP X8 (for continuous immersion).
Triple impregnation humidity-proof dry winding.
Constructed in accordance with EN 60335-2-41.

Materials

Component	Material
Delivery casing External jacket Suction strainer Motor jacket	Chrome-nickel steel 1.4301 EN 10088 (AISI 304)
Stage casing Impeller	PPO-GF20 (Noryl)
Shaft	Chrome-nickel steel 1.4301 EN 10088 (AISI 304)
Capacitor cover Oil chamber cover Preload ring stages Support ring preload	PPS Polymer (Grivory)
Upper mechanical seal Lower mechanical seal	Steatite, carbon, NBR Carbon, silicon carbide, NBR
Seal lubrication oil	Oil for food machinery and pharmaceutic use

Special features on request

- Other voltages.
- Frequency 60 Hz (as per 60 Hz data sheet).
- Cable length 20 m.
- Motor suitable operation with frequency converter.

Coverage chart n ≈ 2900 rpm

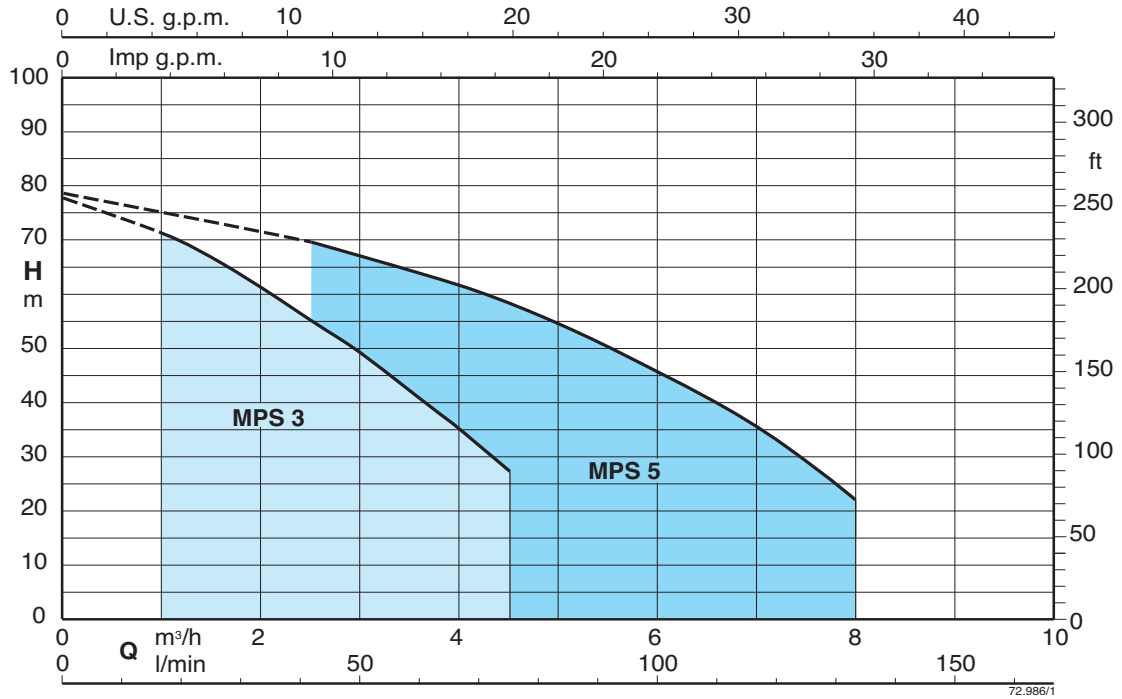

CALPEDA ROMANIA - INFINITY PUMPS SRL
Tel: 0268.33.47.47 / 0722.244.944
vanzari@calpeda.ro | www.calpeda.ro

MPS Multi-Stage Submersible Clean Water Pumps

Performance n ≈ 2900 rpm

3 ~	230 V	400 V	1 ~	230 V	Capacitor		P_1	P_2		Q m³/h	0	1	1,5	2	2,5	3	3,5	4	4,5
	A	A		A	μF	V	kW	kW	HP	l/min	0	16,6	25	33,3	41,6	50	58,3	66,6	75
MPS 303	2,4	1,4	**MPSM 303**	3,5	14	450	0,8	0,45	0,6	H m	32,5	29,5	27,5	25,5	23	19,5	17	13	10
MPS 304	2,8	1,6	**MPSM 304**	4,1	20	450	0,9	0,55	0,75		44	41,5	39,5	36,5	33,5	29,5	25,5	21	16
MPS 305	3,3	1,9	**MPSM 305**	5	20	450	1,1	0,75	1		54	49,5	46,2	43	30,9	35	30	25	19
MPS 306	3,8	2,2	**MPSM 306**	6	25	450	1,3	0,9	1,2		66,5	60,5	57	53	48,5	43,5	38	32	26
MPS 307	4,5	2,6	**MPSM 307**	6,6	25	450	1,5	0,9	1,2		75	67,5	63	58	53	47	41	34,5	27

3 ~	230 V	400 V	1 ~	230 V	Capacitor		P_1	P_2		Q m³/h	0	2,5	3	3,5	4	4,5	5	6	7	8
	A	A		A	μF	V	kW	kW	HP	l/min	0	41,6	50	58,3	66,6	75	83,3	100	116	133
MPS 503	2,8	1,6	**MPSM 503**	4,1	20	450	0,9	0,55	0,75	H m	32,2	28,5	27,5	26	24,5	22,5	21,5	18	13,5	8
MPS 504	3,8	2,2	**MPSM 504**	6	25	450	1,2	0,9	1,2		45	39,5	37,8	35,8	33,5	31	28,5	23	16,5	9,5
MPS 505	4,5	2,6	**MPSM 505**	7	25	450	1,5	1,1	1,5		53	47,5	45,5	43,5	41	38,5	35,5	29,5	22	13,5
MPS 506	4,8	2,8	**MPSM 506**	8,3	30	450	1,7	1,1	1,5		66,5	58	55,6	53	50	46,3	42,5	34	24,5	14
MPS 507	6,9	4	**MPSM 507**	12	35	450	2,2	1,5	2		78,5	69,5	66,5	64	61,5	58	54,5	45,5	36	22

P_1 Max. power input. P_2 Rated motor power output. Tolerances according to UNI EN ISO 9906:2012 Test results with clean cold water, without gas content.

Dimensions and weights

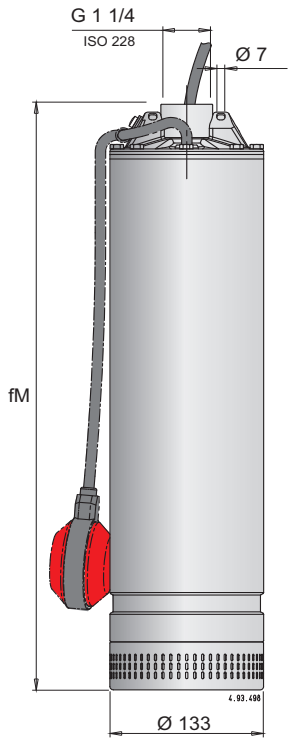

MPSM ... CG
With float switch pump
(on demand)

Weights with cable length: 15 m

Pump	fM mm	kg MPS	kg MPSM	Cable H07RN8-F 230V 1 ~	230V 3 ~	400V 3 ~
MPS 303 - MPSM 303	465	11	12	3G1 mm²	4G1 mm²	4G1 mm²
MPS 304 - MPSM 304	504	11,5	12,5	3G1 mm²	4G1 mm²	4G1 mm²
MPS 305 - MPSM 305	553	12	13	3G1 mm²	4G1 mm²	4G1 mm²
MPS 306 - MPSM 306	577	13,5	15	3G1 mm²	4G1 mm²	4G1 mm²
MPS 307 - MPSM 307	601	14	15,5	3G1 mm²	4G1 mm²	4G1 mm²
MPS 503 - MPSM 503	480	11,5	12,5	3G1 mm²	4G1 mm²	4G1 mm²
MPS 504 - MPSM 504	529	13,5	14,5	3G1 mm²	4G1 mm²	4G1 mm²
MPS 505 - MPSM 505	553	14	15	3G1 mm²	4G1 mm²	4G1 mm²
MPS 506 - MPSM 506	622	15,5	17	3G1,5 mm²	4G1 mm²	4G1 mm²
MPS 507 - MPSM 507	671	17	18,5	3G2,5 mm²	4G1 mm²	4G1 mm²

CALPEDA ROMANIA - INFINITY PUMPS SRL
Tel: 0268.33.47.47 / 0722.244.944
vanzari@calpeda.ro | www.calpeda.ro

MPS Multi-Stage Submersible Clean Water Pumps

Characteristic curves n ≈ 2900 rpm

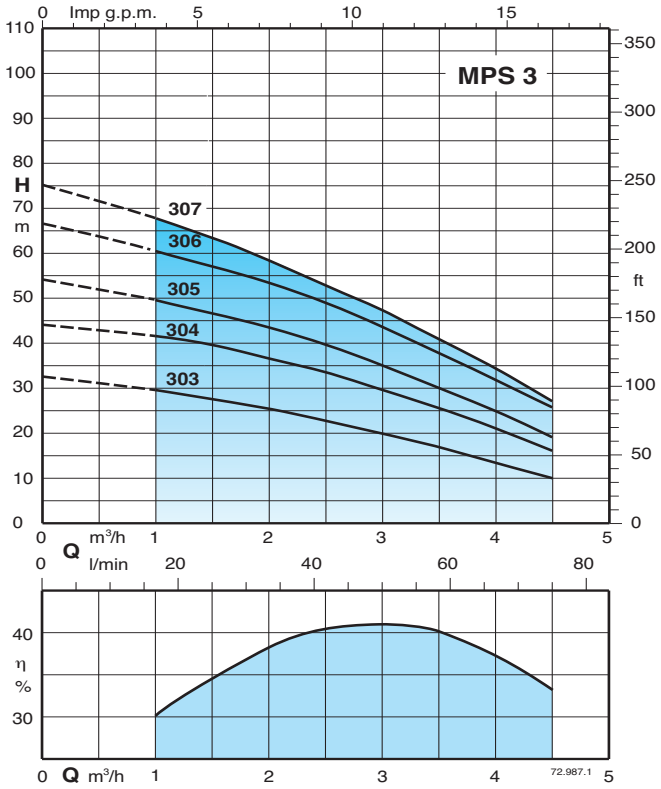

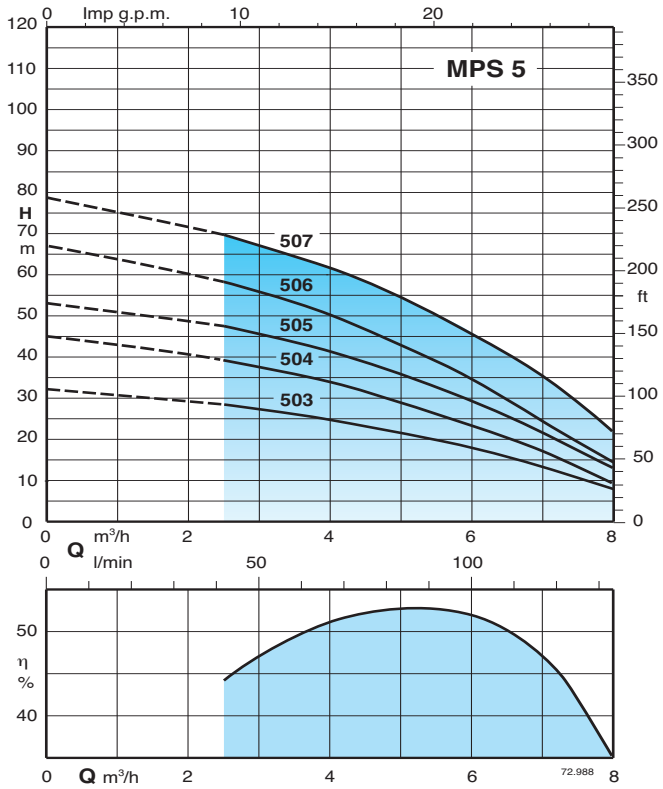

CALPEDA ROMANIA - INFINITY PUMPS SRL
Tel: 0268.33.47.47 / 0722.244.944
vanzari@calpeda.ro | www.calpeda.ro

MPS Multi-Stage Submersible Clean Water Pumps

Features

PATENTED

Innovative
Designed to withstand water hammering and the ON-OFF operation of any valve located in the discharge line.
The impacts generated by water hammering or by the closing of the valve are fully supported by the capacitor cover,which relieves the stresses on a specific support made on the stainless steel jacket, without affecting the plastic hydraulic part.

Flexible
Allows the inspection of the capacitor without disassembling the pump, through the delivery casing.

Reliable
The ball bearings and shaft are sized in order to reduce stresses, guaranteeing high reliability in any operating condition.

Low cost installation
Immersed, without suction pipe and valves. The cylindrical suction strainer provides support for the pump when installed on a flat surface or tank bottom. For operation with 100 mm minimum water level.

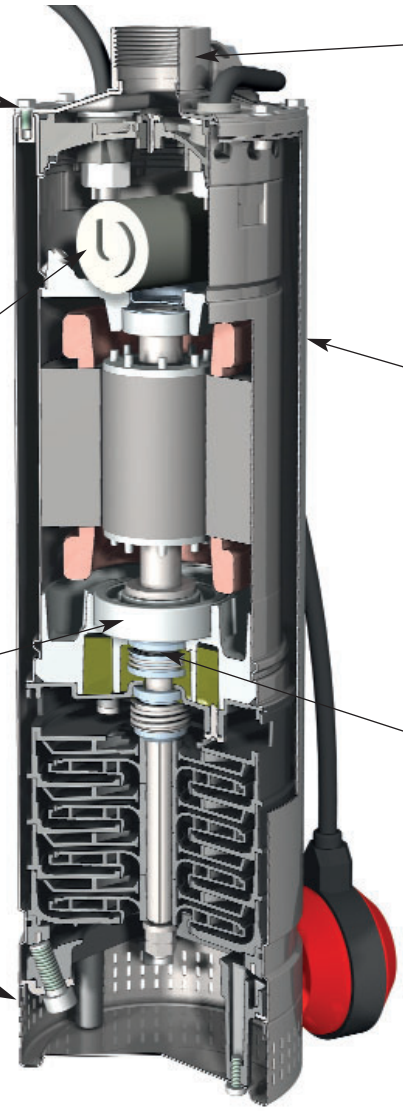

Robust
Its robust stainless steel external construction allows for the pump to be suspended from the delivery pipe.

Low-Noise operation
The design of hydraulic parts, the water-filled shroud around the motor and the submerged operation ensures low noise operation.

Greater Safety
The double shaft sealing with an oil chamber separates the motor from the water and provides further protection against accidental operation when dry.

Installation

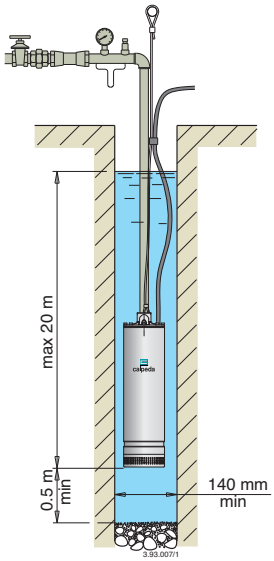

Pump in suspended position

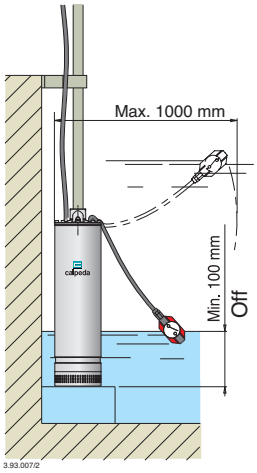

Pump with float switch (on demand)

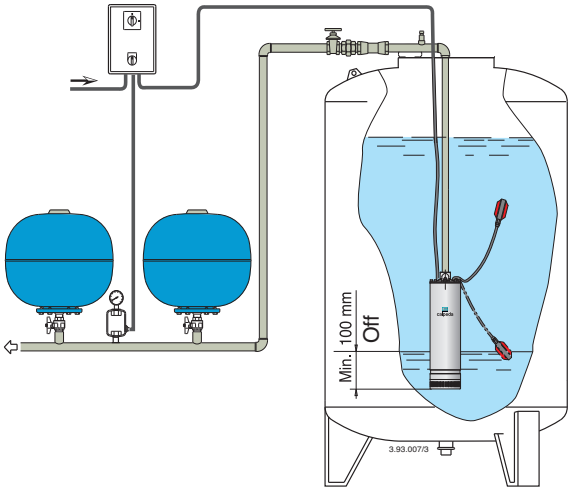

Installation example

CALPEDA ROMANIA - INFINITY PUMPS SRL
Tel: 0268.33.47.47 / 0722.244.944
vanzari@calpeda.ro | www.calpeda.ro

MXS

Multi-Stage Submersible Clean Water Pumps in stainless steel

PATENTED

Construction

5” Close coupled multi-stage submersible pumps.
All parts in contact with the fluid both internal and external are in chrome-nickle stainless steel.
MXSM with built-in capacitor, accessible through the delivery casing.
Hydraulics located below the motor with the motor cooled by the pumped fluid. Safe operation is possible with the motor only partially submerged.
Double shaft seal with oil chamber.
The suction strainer prevents the entrance of solids with diameter bigger than 2 mm.

Applications

For water supply from wells, tanks or reservoirs.
For domestic, civil and industrial applications, for garden use, irrigation and rain water harvesting systems.

Operating conditions

Water temperature up to 35 °C.
Minimum internal diameter of well: 140 mm.
Minimum immersion depth: 100 mm.
Maximum immersion depth: 20 m (with suitable cable length).
Continuous duty.

Motor

2-pole induction motor, 50 Hz (n ≈ 2900 1/min).
MXS : three-phase 230 V ± 10%;
three-phase 400 V ± 10%.
Cable: H07RN8-F, length 15 m, without plug.

MXSM : single-phase 230 V ± 10%, with thermal protector.
Incorporated capacitor.
Float switch MXSM.. CG up to 10A (on demand)
Cable: H07RN8-F, length 15 m, with plug CEI-UNEL 47166.

Insulation class F.
Protection IP X8 (for continuous immersion).
Triple impregnation humidity-proof dry winding.
Constructed in accordance with EN 60335-2-41.

Materials

Component	Material
Delivery casing External jacket Suction strainer Stage casing Spacer sleeve Impeller Motor jacket Jacket cover Oil chamber cover	Chrome-nickel steel 1.4301 EN 10088 (AISI 304)
Shaft	Chrome-nickel steel 1.4301 EN 10088 (AISI 304)
Upper mechanical seal Lower mechanical seal	Steatite, carbon, NBR Ceramic alumina, silicon carbide, NBR
Seal lubrication oil	Oil for food machinery and pharmaceutic use

Special features on request

- Other voltages. - Frequency 60 Hz (as per 60 Hz data sheet).
- Cable length 20 m.
- Motor suitable operation with frequency converter.

Coverage chart n ≈ 2900 rpm

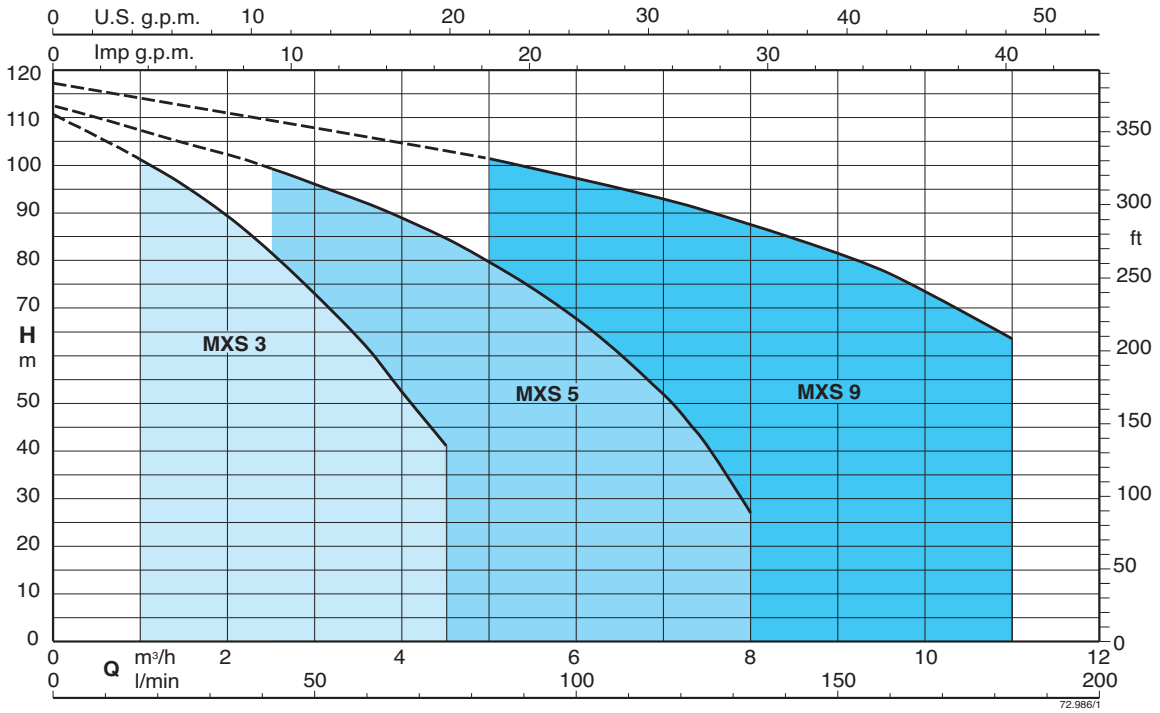

CALPEDA ROMANIA - INFINITY PUMPS SRL
Tel: 0268.33.47.47 / 0722.244.944
vanzari@calpeda.ro | www.calpeda.ro

MXS

Multi-Stage Submersible Clean Water Pumps in stainless steel

calpeda

Performance n ≈ 2900 rpm

3 ~	230 V	400 V	1 ~	230 V	Capacitor		P1	P2		Q m³/h	0	1	1,5	2	2,5	3	3,5	4	4,5
	A	A		A	µF	V	kW	kW	HP	l/min	0	16,6	25	33,3	41,6	50	58,3	66,6	75
MXS 303	2,4	1,4	**MXSM 303**	3,5	14	450	0,8	0,45	0,6		32,5	29,5	27,5	25,5	23	19,5	17	13	10
MXS 304	2,8	1,6	**MXSM 304**	4,1	20	450	0,9	0,55	0,75		44	41,5	39,5	36,5	33,5	29,5	25,5	21	16
MXS 305	3,3	1,9	**MXSM 305**	5	20	450	1,1	0,75	1		53	49,5	47	44	40	35	30	25	19
MXS 306	3,8	2,2	**MXSM 306**	6	25	450	1,3	0,9	1,2	**H** m	65	61	58	54	49	43	37	30,5	23
MXS 307	4,5	2,6	**MXSM 307**	6,6	25	450	1,5	0,9	1,2		77,5	71	66,5	61	55	49	42	35	27
MXS 308	4,8	2,8	**MXSM 308**	8,3	30	450	1,7	1,1	1,5		88,5	81,5	76	70,5	64	56,5	49,5	41	32
MXS 309	6,6	3,8	**MXSM 309**	9	30	450	1,9	1,5	2		100	91	85	78,5	70,5	62,5	54,4	45	35
MXS 310	7,5	4,3	**MXSM 310**	12	35	450	2,2	1,5	2		111	101,5	95	88,5	80	71	62	52,5	41,5

3 ~	230 V	400 V	1 ~	230 V	Capacitor		P1	P2		Q m³/h	0	2,5	3	3,5	4	4,5	5	6	7	8
	A	A		A	µF	V	kW	kW	HP	l/min	0	41,6	50	58,3	66,6	75	83,3	100	116	133
MXS 503	2,8	1,6	**MXSM 503**	4,1	20	450	0,9	0,55	0,75		32,2	28,5	27,5	26	24,5	22,5	21,5	18	13,5	8
MXS 504	3,8	2,2	**MXSM 504**	6	25	450	1,2	0,9	1,2		43	39	38	36,5	34,5	33	30,5	25,5	19,5	13
MXS 505	4,5	2,6	**MXSM 505**	7	25	450	1,5	1,1	1,5		53	47,5	45,5	43,5	41	38,5	35,5	29,5	22	13,5
MXS 506	4,8	2,8	**MXSM 506**	8,3	30	450	1,7	1,1	1,5	**H** m	66,5	58	55,6	53,5	51	48	45	36,5	27,5	16
MXS 507	6,9	4	**MXSM 507**	12	35	450	2,2	1,5	2		78,5	69,5	66,5	64	61,5	58	54,5	45,5	36	22
MXS 508	7,5	4,3	**MXSM 508**	13	35	450	2,4	1,5	2		88,5	78	75	72	68	64	60	50	38	25
MXS 509	9,7	5,6	**MXSM 509**	14,3	40	450	2,9	2,2	3		101	91	87,5	84	80,5	75,5	71	60	46,5	28,5
MXS 510	9,7	5,6						2,2	3		111	100	96,5	93	89	84,5	80	66,5	52	31

3 ~	230 V	400 V	1 ~	230 V	Capacitor		P1	P2		Q m³/h	0	5	6	7	8	9	10	11
	A	A		A	µF	V	kW	kW	HP	l/min	0	83,3	100	116	133	150	166,6	183,3
MXS 903	4,5	2,6	**MXSM 903**	7	25	450	1,5	1,1	1,5		34	28,2	26,8	25,2	23,3	21,2	18,5	15,5
MXS 904	6,6	3,8	**MXSM 904**	9	30	450	1,9	1,5	2		45,5	39	37	35	32,5	30	26,5	22,5
MXS 905	7,5	4,3	**MXSM 905**	13	35	450	2,4	2,2	3		58	49	46,5	45	42,5	38,5	34	30
MXS 906	9,7	5,6	**MXSM 906**	14,3	40	450	2,9	2,2	3	**H** m	70	59,5	56,5	54	50,5	46,5	42	37
MXS 907	11,4	6,6						3	4		81	71	68,5	66	62	58	53	47
MXS 908	14,7	8,5						3	4		93	81	78	75	71	66	60,5	53
MXS 909	14,7	8,5						3	4		105	92	88	84	79	73,5	67,5	57,5
MXS 910	14,7	8,5						3	4		117	101,2	96,5	93	87,5	81,5	73,5	63,5

P1 Max. power input. P2 Rated motor power output. Tolerances according to UNI EN ISO 9906:2012 Test results with clean cold water, without gas content.

Dimensions and weights

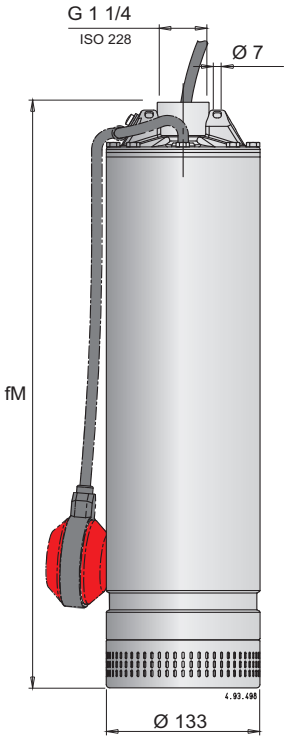

MXSM ... CG
With float switch pump
(on demand)

Weights with cable length: 15 m

Pump	fM mm	kg MXS	kg MXSM	Cavo H07RN8-F 230V 1 ~	230V 3 ~	400V 3 ~
MXS 303 - MXSM 303	465	12,5	13,5	3G1 mm²	4G1 mm²	4G1 mm²
MXS 304 - MXSM 304	504	14,5	15,5	3G1 mm²	4G1 mm²	4G1 mm²
MXS 305 - MXSM 305	553	15	16,5	3G1 mm²	4G1 mm²	4G1 mm²
MXS 306 - MXSM 306	577	15,5	17	3G1 mm²	4G1 mm²	4G1 mm²
MXS 307 - MXSM 307	601	16	17,5	3G1 mm²	4G1 mm²	4G1 mm²
MXS 308 - MXSM 308	671	18,5	19,5	3G1,5 mm²	4G1 mm²	4G1 mm²
MXS 309 - MXSM 309	695	20,6	21,6	3G1,5 mm²	4G1,5 mm²	4G1 mm²
MXS 310 - MXSM 310	744	23	25,1	3G2,5 mm²	4G1,5 mm²	4G1 mm²
MXS 503 - MXSM 503	480	14,5	15,5	3G1 mm²	4G1 mm²	4G1 mm²
MXS 504 - MXSM 504	529	15	16	3G1 mm²	4G1 mm²	4G1 mm²
MXS 505 - MXSM 505	553	16,1	17,6	3G1 mm²	4G1 mm²	4G1 mm²
MXS 506 - MXSM 506	622	17,5	19	3G1,5 mm²	4G1 mm²	4G1 mm²
MXS 507 - MXSM 507	671	20	21,5	3G2,5 mm²	4G1 mm²	4G1 mm²
MXS 508 - MXSM 508	695	20,5	22	3G2,5 mm²	4G1,5 mm²	4G1 mm²
MXS 509 - MXSM 509	744	23	24,5	3G2,5 mm²	4G1,5 mm²	4G1 mm²
MXS 510	768	27			4G1,5 mm²	4G1 mm²
MXS 903 - MXSM 903	523	16,1	17,6	3G1,5 mm²	4G1 mm²	4G1 mm²
MXS 904 - MXSM 904	573	18,2	19,7	3G1,5 mm²	4G1 mm²	4G1 mm²
MXS 905 - MXSM 905	653	19	22	3G2,5 mm²	4G1,5 mm²	4G1 mm²
MXS 906 - MXSM 906	708	23	26	3G2,5 mm²	4G1,5 mm²	4G1 mm²
MXS 907	738	26,3			4G2,5 mm²	4G1 mm²
MXS 908	793	27			4G2,5 mm²	4G1 mm²
MXS 909	823	28,1			4G2,5 mm²	4G1,5 mm²
MXS 910	853	29,5			4G2,5 mm²	4G1,5 mm²

CALPEDA ROMANIA - INFINITY PUMPS SRL
Tel: 0268.33.47.47 / 0722.244.944
vanzari@calpeda.ro | www.calpeda.ro

MXS

Multi-Stage Submersible Clean Water Pumps in stainless steel

Characteristic curves n ≈ 2900 rpm

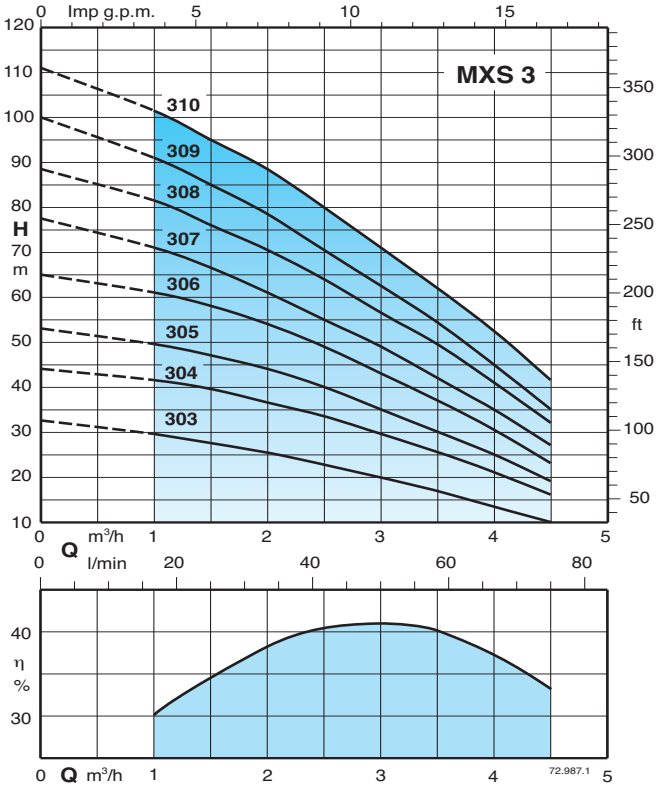

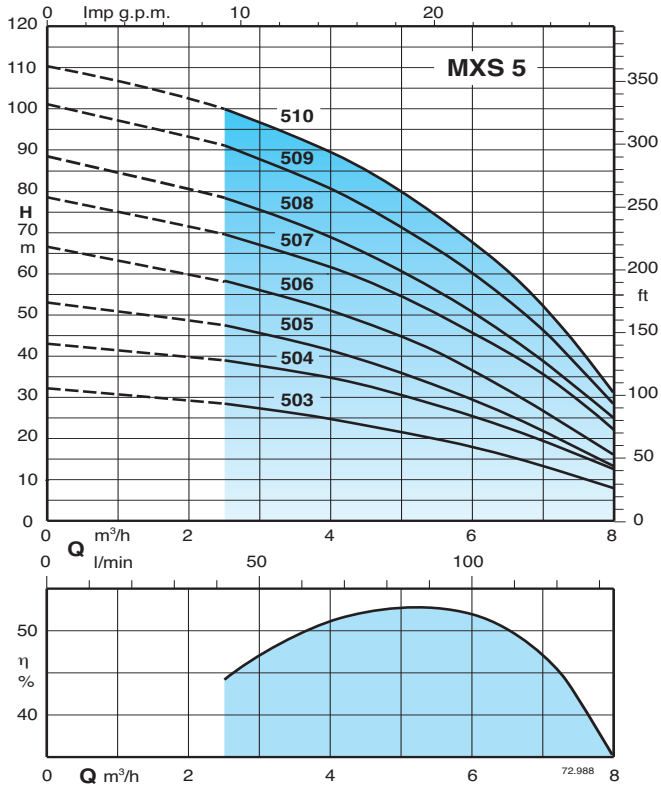

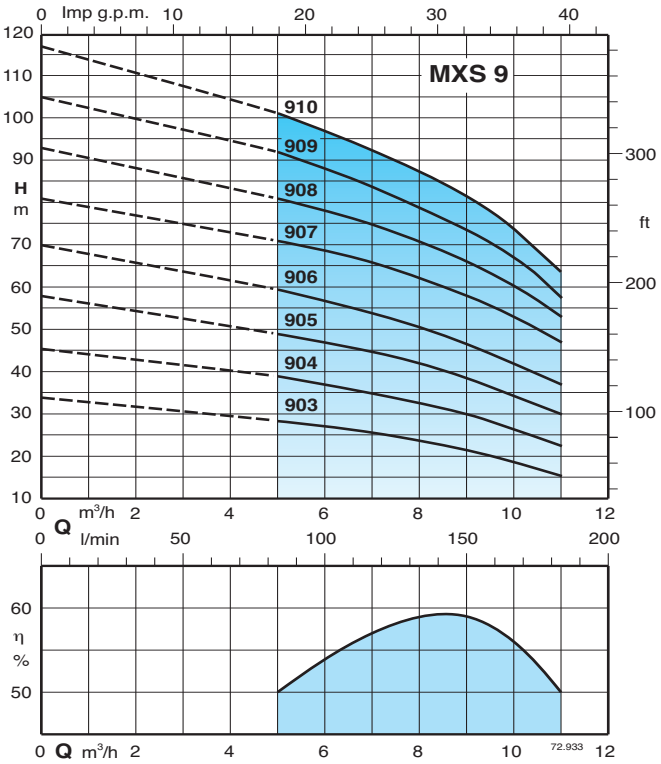

CALPEDA ROMANIA - INFINITY PUMPS SRL
Tel: 0268.33.47.47 / 0722.244.944
vanzari@calpeda.ro | www.calpeda.ro

MXS

Multi-Stage Submersible Clean Water Pumps in stainless steel

Features

PATENTED

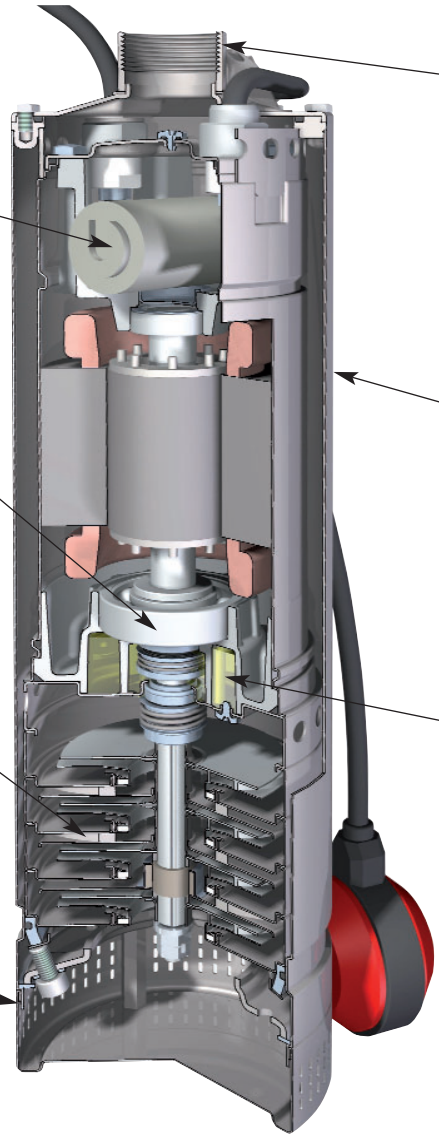

Flexible
Allows the inspection of the capacitor without disassembling the pump, through the delivery casing.

Reliable
The ball bearings and shaft are sized in order to reduce stresses, guaranteeing high reliability in any operating condition.

Totally in stainless stell
All parts in contact with the pumped liquid both internal and external are in stainless steel AISI 304, without plastic materials and components.

Low cost installation
Immersed, without suction pipe and valves. The cylindrical suction strainer provides support for the pump when installed on a flat surface or tank bottom. For operation with 100 mm minimum water level.

Robust
Its robust stainless steel construction allows for the pump to be suspended from the delivery pipe.

Low-Noise operation
The design of hydraulic parts, the water-filled shroud around the motor and the submerged operation ensures low noise operation.

Greater Safety
The double shaft sealing with an oil chamber separates the motor from the water and provides further protection against accidental operation when dry.

Installation

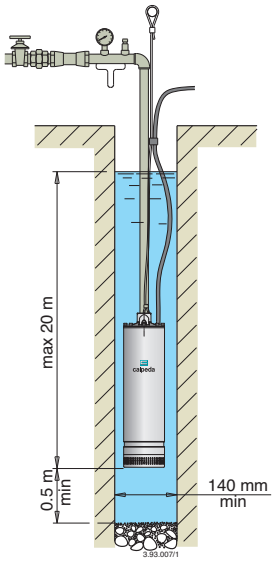

Pump in suspended position

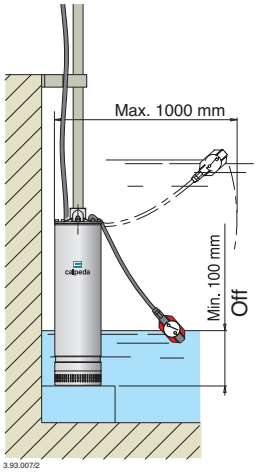

Pump with float switch (on demand)

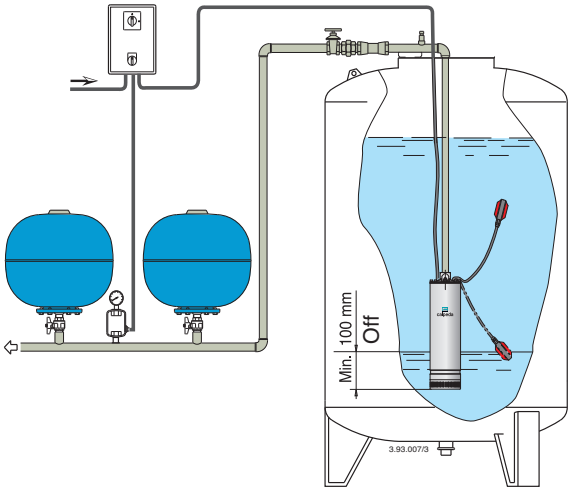

Installation example

CALPEDA ROMANIA - INFINITY PUMPS SRL
Tel: 0268.33.47.47 / 0722.244.944
vanzari@calpeda.ro | www.calpeda.ro

SD

Submersible borehole pumps for 4” and 6” wells

The electropumps 4SD31, 4SDF series comply with the European Regulation no. 547/2012.

Materials

	Components	Part Nr.	4SD, 4SDF	6SD, 6SDN
Pump	External jacket	14.02	Cr-Ni steel AISI 304	
	Stage casing (4SDF)	25.02	Cr-Ni steel AISI 304	-
	Stage casing (4,6SD) Diffuser Impeller	25.02 26.00 28.00	Polycarbonate (Lexan 141 R) GFN2V* (NORYL®)* for 4SDF	GFN2V* (NORYL®)
	Wear ring		Cr-Ni steel AISI 304	
	Shaft	64.00	Cr steel AISI 430 F	
	Delivery casing Suction lantern	12.01 32.02	Cr-Ni steel AISI 304	Bronze G-Cu Sn 10 EN 1982
	Bearing bush	12.03-12.30	Thermoplastic	Rubber
	Strainer	15.50	Cr-Ni steel AISI 430	
	Screws		Cr-Ni steel AISI 304	

* Trademark of General Electric

	Components	4CS	6CS-R
Motor	External frame	Cr-Ni steel AISI 304	
	Shaft	Cr-Ni-Mo steel AISI 316 (shaft end)	Cr steel AISI 431
	Thrust bearing	Oil wetted ball type	Oscillation pads
	Bearing bush	Oil wetted ball type	Graphite

Construction

Submersible borehole pumps for 4” wells (DN 100 mm), and 6” (DN 150 mm), with external jacket in stainless steel AISI 304 and stages in polycarbonate for 4SD pumps and in noryl for 4SDF, 6SD, 6SDN pumps.

Impellers

radial floating impellers	4SDF 16, 22, 36, 46, 54
radial impellers	4SD 31, - 6SDN 12, 16, 21
mixed flow impellers	4SD 10, 15 - 6SD 18, 19, 20

Connection: screwed connection ISO 228.
Delivery casing with built-in non-return valve.

Applications

For water supply.
For civil and industrial applications.
For fire fighting applications.
For irrigation.

Operating conditions

Liquid temperature: - up to a 35 °C for 4” motors
- up to a 25 °C for 6-8-10” motors.

Max. sand quantity into the water: 150 g/m³ (300 g/m³ high percentage of solids and sand).
Continuous duty.

Rewindable motor CS series

2-pole induction motor, 50 Hz (n ≈ 2900 rpm).
Sized for connection to the pumps according to NEMA Standards.
Standard voltages:
- single-phase 230 V up to 2,2 kW for 4” motors.
- three-phase 230 V; 400 V, for 4” motors.
- three-phase 400 V; 400/690 V, for 6” motors.

Voltage tolerance : +6% / -10%.

In order to limit both current and torque at each starting, for rated motor powers equal to or higher than 7.5 kW, one of the following types of starting is necessary: star/delta, soft starter, stator impedance or autotransformer.

Operating conditions motor

Motor	Max. Liquid temperature	Cooling: minimum flow velocity	Max. starts per hour	Motor P2
4CS	35 °C	0,08 m/s	20	all types
6CS-R	30 °C	0,1 m/s	15	4÷11 kW
		0,2 m/s	15	13÷15 kW
	25 °C	0,2 m/s	15	18,5 kW
		0,2 m/s	13	22÷30 kW

Insulation class F for 4” motors, class E for 6” motors.
Motor suitable operation with frequency converter .
Protection IP 68.

Special features on request

- Other voltages.
- 60 Hz frequency.
- Other temperatures.
- Encapsulated motor **FK series**.

Designation

4 SD M 31 / 26

- Ø of the well in inches
- Series
- Single-phase motor (up to max. 2,2 kW)
- Stage identification
- Number of stages

CALPEDA ROMANIA - INFINITY PUMPS SRL
Tel: 0268.33.47.47 / 0722.244.944
vanzari@calpeda.ro | www.calpeda.ro

SD

Submersible borehole pumps for 4” and 6” wells

Coverage chart n ≈ 2900 rpm

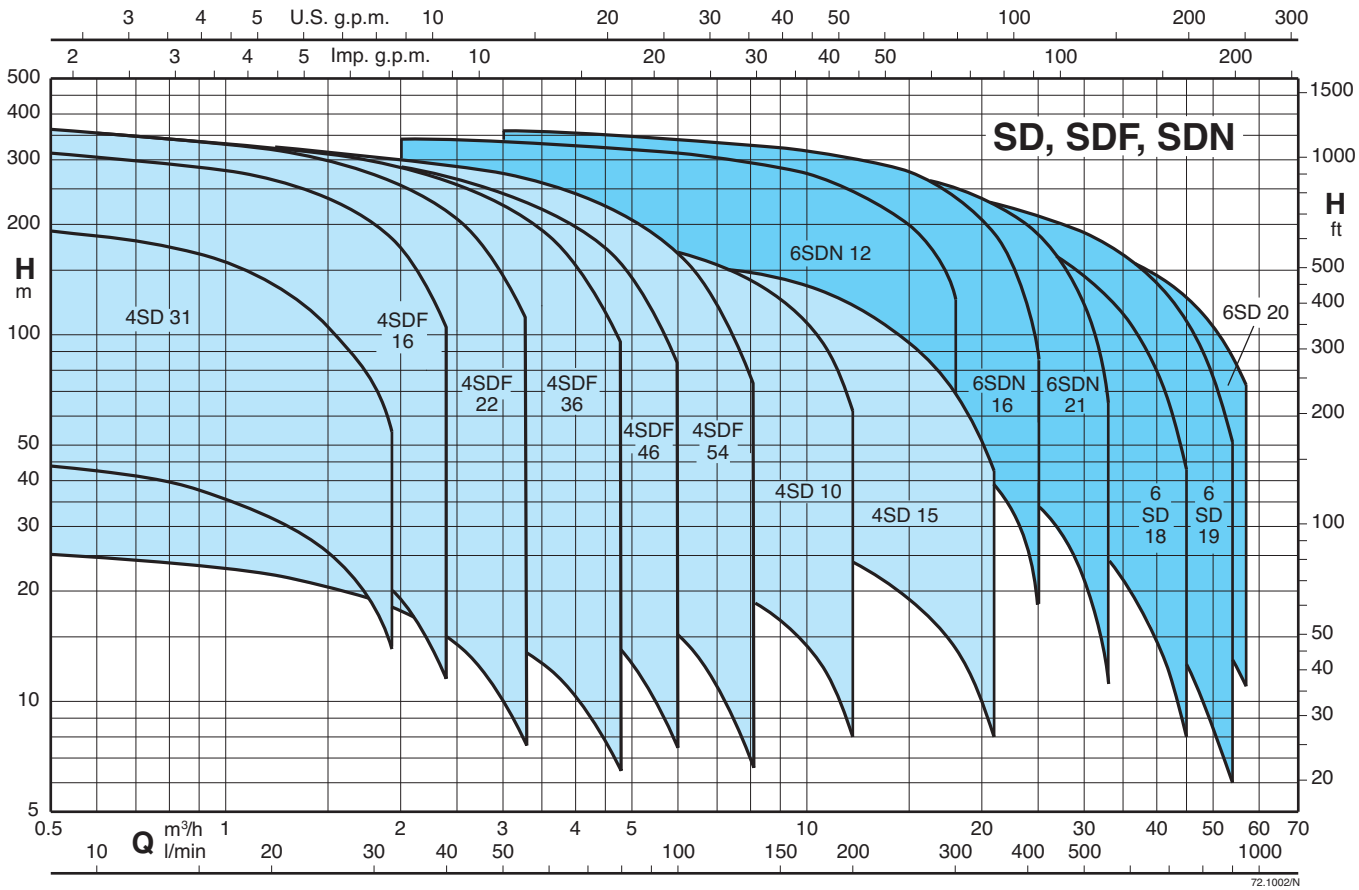

CALPEDA ROMANIA - INFINITY PUMPS SRL
Tel: 0268.33.47.47 / 0722.244.944
vanzari@calpeda.ro | www.calpeda.ro

4SD, 4SDF

Submersible borehole pumps for 4”

Performance n ≈ 2900 rpm

3~ 400 V (380-415) 50 Hz		1~ 230V	* Capacitor	P1	P2		Q	n ≈ 2900 1/min																
							m³/h	0,15	0,3	0,6	0,9	1,2	1,5	1,8	2,1	2,4	2,7	3	3,3	3,6	4,2	4,8	5,4	6
	A		A	450 Vc µF	kW	kW	HP	l/min	2,5	5	10	15	20	25	30	35	40	45	50	55	60	70	80	90	100
4SD 31/11EC	1,2	4SDM 31/11EC	3,2	16	0,62	0,37	0,5		45,6	43,8	39,3	33,8	28	20,9	14										
4SD 31/17EC	1,2	4SDM 31/17EC	3,2	16	0,7	0,37	0,5		67,7	64,5	57,3	49,4	40,9	31	20,2										
4SD 31/26EC	1,5	4SDM 31/26EC	4	25	0,89	0,55	0,75		104	98,9	87,9	75,2	61,2	45,7	28,1										
4SD 31/35EC	2	4SDM 31/35EC	5,6	35	1,22	0,75	1		131	124	109	92,6	73,8	53,1	30,8										
4SD 31/54EC	2,9	4SDM 31/54EC	8,4	40	1,82	1,1	1,5		203	193	170	144	116	86	52,9										
4SDF 16/6EC	1,2	4SDFM 16/6EC	3,2	16	0,62	0,37	0,5			35,1	33,6	31,5	28,6	25,1	21	16,3	11,1								
4SDF 16/9EC	1,2	4SDFM 16/9EC	3,2	16	0,7	0,37	0,5			52,7	50,4	47,2	42,9	37,6	31,4	24,4	16,6								
4SDF 16/14EC	1,5	4SDFM 16/14EC	4	25	0,89	0,55	0,75			82	78,5	73,4	66,8	58,5	48,9	38	25,8								
4SDF 16/19EC	2	4SDFM 16/19EC	5,6	35	1,22	0,75	1			111	106	100	90,6	79,5	66,4	51,5	35,1								
4SDF 16/27EC	2,9	4SDFM 16/27EC	8,4	40	1,82	1,1	1,5			158	151	142	129	113	94,3	73,2	49,8								
4SDF 16/37EC	4,2	4SDFM 16/37EC	11,2	60	2,33	1,5	2			217	207	194	176	155	129	100	68,3								
4SDF 16/55EC	5,5	4SDFM 16/55EC	14,7	70	3,27	2,2	3			322	308	288	262	230	192	149	102								
4SDF 22/4EC	1,2	4SDFM 22/4EC	3,2	16	0,62	0,37	0,5			25,8	25,2	24,3	23,1	21,6	19,8	17,8	15,5	13	10,3	7,4					
4SDF 22/7EC	1,2	4SDFM 22/7EC	3,2	16	0,7	0,37	0,5			45,1	44	42,5	40,4	37,8	34,7	31,2	27,1	22,8	18	13					
4SDF 22/10EC	1,5	4SDFM 22/10EC	4	25	0,89	0,55	0,75			64,4	62,9	60,7	57,7	54	49,6	44,5	38,8	32,5	25,8	18,5					
4SDF 22/14EC	2	4SDFM 22/14EC	5,6	35	1,22	0,75	1			90,2	88,1	84,9	80,8	75,6	69,5	62,3	54,3	45,5	36,1	25,9					
4SDF 22/21EC	2,9	4SDFM 22/21EC	8,4	40	1,82	1,1	1,5	H		135	132	127	121	113	104	93,5	81,4	68,3	54,1	38,9					
4SDF 22/28EC	4,2	4SDFM 22/28EC	11,2	60	2,33	1,5	2	m		180	176	170	162	151	139	125	109	91,1	72,2	51,9					
4SDF 22/42EC	5,5	4SDFM 22/42EC	14,7	70	3,27	2,2	3			271	264	255	242	227	208	187	163	137	108	77,8					
4SDF 22/57EC	7,4					3	4			367	359	346	329	308	283	254	221	185	147	106					
4SDF 36/4EC	1,2	4SDFM 36/4EC	3,2	16	0,62	0,37	0,5				22,8	22,3	21,8	21,3	20,5	19,7	18,8	17,9	16,8	15,6	14,1	10,7	6,6		
4SDF 36/6EC	1,2	4SDFM 36/6EC	3,2	16	0,7	0,37	0,5				34,2	33,5	32,7	31,9	30,7	29,6	28,3	26,9	25,2	23,4	21,2	16	9,9		
4SDF 36/8EC	1,5	4SDFM 36/8EC	4	25	0,89	0,55	0,75				45,6	44,7	43,6	42,5	40,9	39,4	37,7	35,9	33,6	31,2	28,2	21,3	13,2		
4SDF 36/11EC	2	4SDFM 36/11EC	5,6	35	1,22	0,75	1				62,7	61,4	59,9	58,4	56,3	54,2	51,8	49,3	46,2	42,9	38,8	29,4	18,1		
4SDF 36/17EC	2,9	4SDFM 36/17EC	8,4	40	1,82	1,1	1,5				96,9	95	92,6	90,3	87	83,8	80,1	76,2	71,4	66,2	60	45,4	28		
4SDF 36/23EC	4,2	4SDFM 36/23EC	11,2	60	2,33	1,5	2				131	128	125	122	118	113	108	103	96,6	89,6	81,2	61,4	37,8		
4SDF 36/29EC	5,5	4SDFM 36/29EC	14,7	70	3,27	2,2	3				165	162	158	154	148	143	137	130	122	113	102	77,4	47,7		
4SDF 36/34EC	5,5	4SDFM 36/34EC	14,7	70	3,27	2,2	3				194	190	185	180	174	168	160	152	143	132	120	90,7	55,9		
4SDF 36/45EC	7,4					3	4				256	251	245	239	230	222	212	202	189	175	159	120	74		
4SDF 36/58EC	9,4					4	5,5				331	324	316	308	297	286	273	260	244	226	205	155	95,4		
4SDF 46/5EC	1,2	4SDFM 46/5EC	3,2	16	0,7	0,37	0,5					27,8	27,1	26,4	25,6	25	23,9	22,9	21,9	20,7	19,6	17	14,2	11,1	7,6
4SDF 46/7EC	1,5	4SDFM 46/7EC	4	25	0,89	0,55	0,75					38,9	37,9	36,9	35,9	35	33,5	32	30,6	29	27,4	23,8	19,9	15,5	10,7
4SDF 46/10EC	2	4SDFM 46/10EC	5,6	35	1,22	0,75	1					55,5	54,2	52,7	51,3	50	47,8	45,8	43,7	41,5	39,1	34	28,4	22,2	15,3
4SDF 46/15EC	2,9	4SDFM 46/15EC	8,4	40	1,82	1,1	1,5					83,3	81,3	79,1	76,9	75	71,7	68,7	65,6	62,2	58,7	51	42,6	33,3	22,9
4SDF 46/21EC	4,2	4SDFM 46/21EC	11,2	60	2,33	1,5	2					117	114	111	108	105	100	96,2	91,9	87,1	82,2	71,4	59,6	46,6	32,1
4SDF 46/31EC	5,5	4SDFM 46/31EC	14,7	70	3,27	2,2	3					172	168	163	159	155	148	142	136	129	121	105	88	68,8	47,4
4SDF 46/42EC	7,4					3	4					233	228	221	215	210	201	192	184	174	164	143	119	93,2	64,2
4SDF 46/55EC	9,4					4	5,5					305	298	290	282	275	263	252	241	228	215	187	156	122	84,1

3~ 400 V (380-415) 50 Hz		1~ 230V	* Capacitor	P1	P2		Q	n ≈ 2900 1/min																
							m³/h	1,2	1,5	1,8	2,4	3	3,6	4,8	6	7,2	8,1	8,4	9,6	10,8	12	15	18	21
	A		A	450 Vc µF	kW	kW	HP	l/min	20	25	30	40	50	60	80	100	120	135	140	160	180	200	250	300	350
4SDF 54/5EC	1,5	4SDFM 54/5EC	4	25	0,89	0,55	0,75		29,1	28,5	28	26,8	25,6	24,2	20,9	16,8	11,6	6,6							
4SDF 54/7EC	2	4SDFM 54/7EC	5,6	35	1,22	0,75	1		40,7	39,8	39,2	37,6	35,8	33,8	29,3	23,5	16,3	9,3							
4SDF 54/10EC	2,9	4SDFM 54/10EC	8,4	40	1,82	1,1	1,5		64	62,6	61,6	59,1	56,3	53,2	46	36,9	25,6	14,6							
4SDF 54/14EC	4,2	4SDFM 54/14EC	11,2	60	2,33	1,5	2		87,3	85,4	84,1	80,5	76,7	72,5	62,7	50,3	34,8	19,9							
4SDF 54/21EC	5,5	4SDFM 54/21EC	14,7	70	3,27	2,2	3		128	125	123	118	113	106	92	73,7	51,1	29,2							
4SDF 54/29EC	7,4					3	4		175	171	168	161	153	145	125	101	69,7	39,9							
4SDF 54/38EC	9,4					4	5,5		233	228	224	215	205	193	167	134	92,9	53,1							
4SDF 54/53EC	13					5,5	7,5		320	313	308	295	281	266	230	184	128	73,1							
4SD 10/4EC	2	4SDM 10/4EC	5,6	35	1,22	0,75	1			27	26,5	26	26	25	24	23	20	18,5	18	15	12	8			
4SD 10/6EC	2,9	4SDM 10/6EC	8,4	40	1,82	1,1	1,5			40	40	39	39	38	36	34	31	28	27	23	18	12			
4SD 10/8EC	4,2	4SDM 10/8EC	11,2	60	2,33	1,5	2			54	53,5	53	52	51	48	45	41	37	36	30	25	16			
4SD 10/12EC	5,5	4SDM 10/12EC	14,7	70	3,27	2,2	3			81	80	79	78	76	72	67	61	56	54	46	37	25			
4SD 10/17EC	7,4					3	4	H		114	113	112	111	108	102	95	87	79	76	65	52	35			
4SD 10/20EC	9,4					4	5,5	m		134	133	132	130	127	120	112	102	93	90	76	61	41			
4SD 10/22EC	9,4					4	5,5			148	147	145	143	139	132	123	112	102	99	84	67	45			
4SD 10/24EC	9,4					4	5,5			162	160	158	156	152	144	134	122	112	108	91	74	50			
4SD 10/27EC	13					5,5	7,5			182	180	178	176	171	162	151	138	126	122	103	83	56			
4SD 10/30EC	13					5,5	7,5			202	200	198	195	190	180	168	153	140	135	114	92	62			
4SD 15/6EC	4,2	4SDM 15/6EC	11,2	60	2,33	1,5	2						33	33	32	31	30	29	29	28	26	24	19	14	8
4SD 15/9EC	5,5	4SDM 15/9EC	14,7	70	3,27	2,2	3						50	49	48	47	45	43	43	42	38	36	29	21	13
4SD 15/12EC	7,4					3	4						67	66	64	62	59	57	57	56	51	48	38	28	17
4SD 15/15EC	9,4					4	5,5						84	83	81	78	74	71	71	69	64	59	48	35	21
4SD 15/17EC	9,4					4	5,5						95	94	92	88	84	81	81	79	72	67	54	40	24
4SD 15/23EC	13					5,5	7,5						129	127	124	120	114	109	109	107	98	91	74	54	32
4SD 15/30E	18,8					7,5	10[1]						168	166	162	156	149	142	142	140	128	119	97	70	42

P_1 Max. power input P_2 Rated motor power output [1] Motor Franklin * Only for single-phase motor 230 V - 50 Hz (on request) Tolerances according to UNI EN ISO 9906:2012

CALPEDA ROMANIA - INFINITY PUMPS SRL
Tel: 0268.33.47.47 / 0722.244.944
vanzari@calpeda.ro | www.calpeda.ro

4SD 31

Submersible borehole pumps for 4” wells

Characteristic curves, performance n ≈ 2900 rpm, dimensions and weights

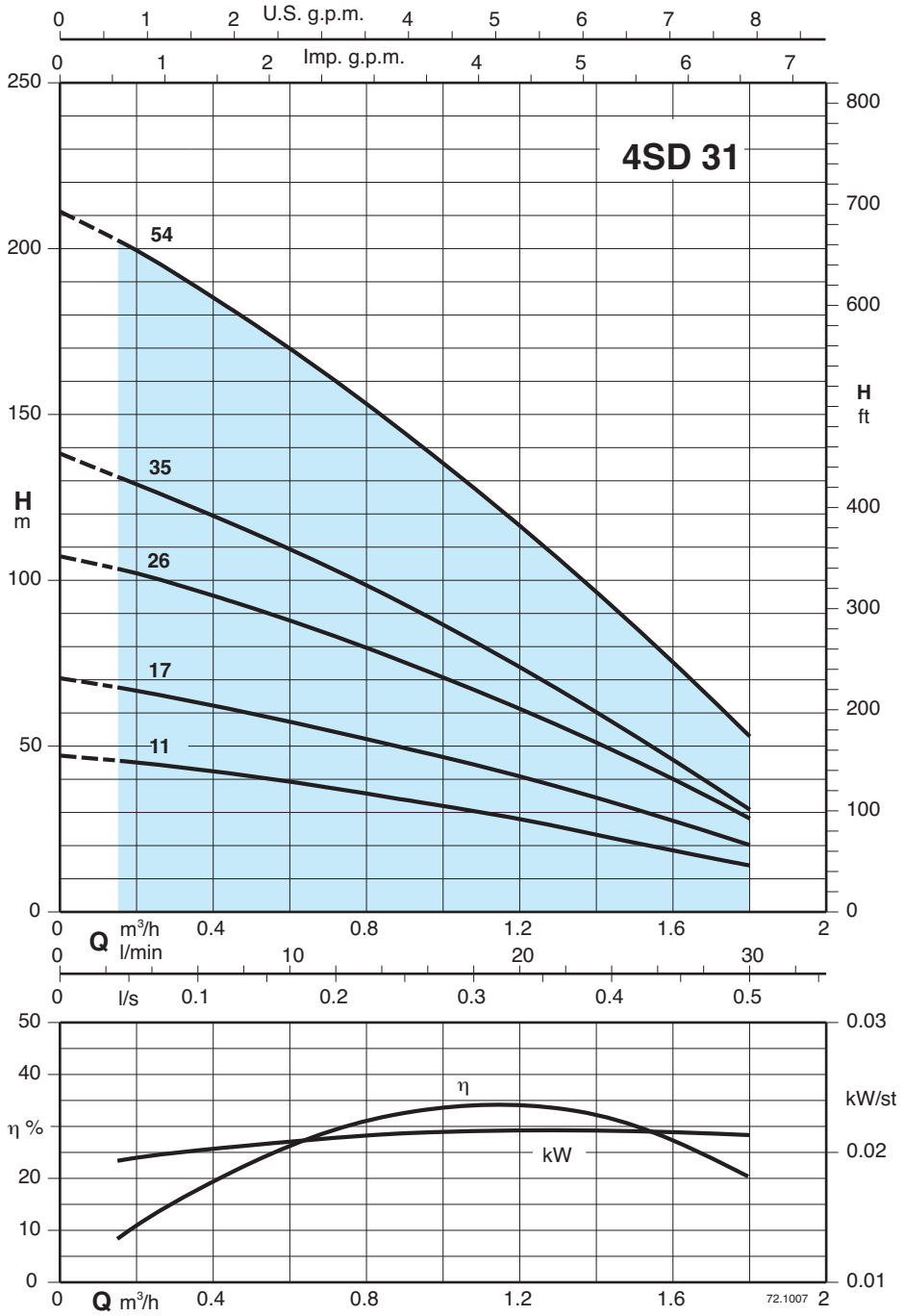

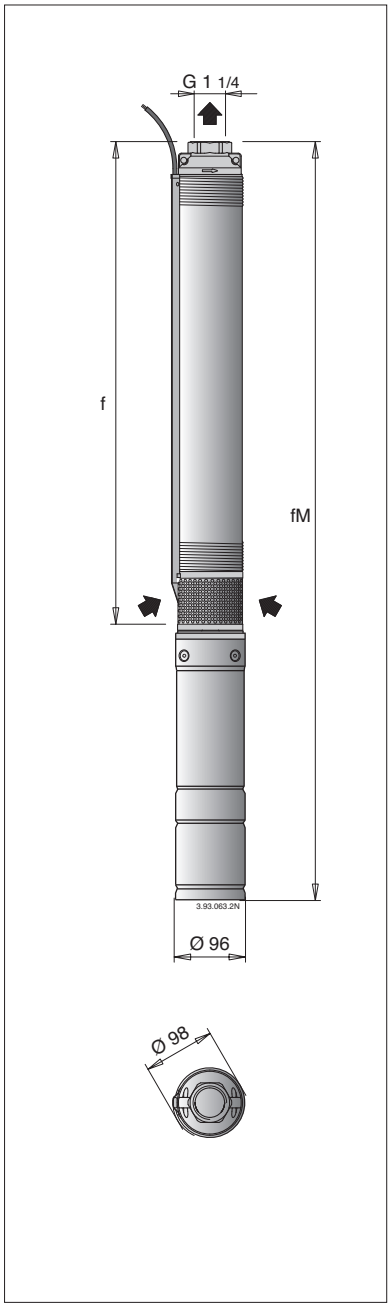

3~ 400 V (380-415) 50 Hz A	1~ 230V A	Capacitor 450 Vc µF	P1 kW	P2 kW	P2 HP	Q m³/h / l/min	n ≈ 2900 rpm 0 / 0	0,15 / 2,5	0,3 / 5	0,6 / 10	0,9 / 15	1,2 / 20	1,5 / 25	1,8 / 30		
4SD 31/11EC	1,2	4SDM 31/11EC	3,2	16	0,62	0,37	0,5	H m	47	45,6	43,8	39,3	33,8	28	20,9	14
4SD 31/17EC	1.2	4SDM 31/17EC	3,2	16	0,7	0,37	0,5		70,5	67,7	64,5	57,3	49,4	40,9	31	20,2
4SD 31/26EC	1.5	4SDM 31/26EC	4	25	0,89	0,55	0,75		107	104	98,9	87,9	75,2	61,2	45,7	28,1
4SD 31/35EC	2	4SDM 31/35EC	5,6	35	1,22	0,75	1		138	131	124	109	92,6	73,8	53,1	30,8
4SD 31/54EC	2.9	4SDM 31/54EC	8,4	40	1,82	1,1	1,5		211	203	193	170	144	116	86	52,9

f mm	4SD fM mm	4SD kg	4SDM fM mm	4SDM kg
402	729	12	729	11,6
520	847	13	847	12,6
698	1045	13,5	1060	15,7
875	1237	15,8	1277	18,3
1295	1697	20	1742	23,3

P_1 Max. power input P_2 Rated motor power output * Only for single-phase motor 230 V - 50 Hz (on request) Tolerances according to UNI EN ISO 9906:2012

CALPEDA ROMANIA - INFINITY PUMPS SRL
Tel: 0268.33.47.47 / 0722.244.944
vanzari@calpeda.ro | www.calpeda.ro

4SDF 16

Submersible borehole pumps for 4” wells

Characteristic curves, performance n ≈ 2900 rpm, dimensions and weights

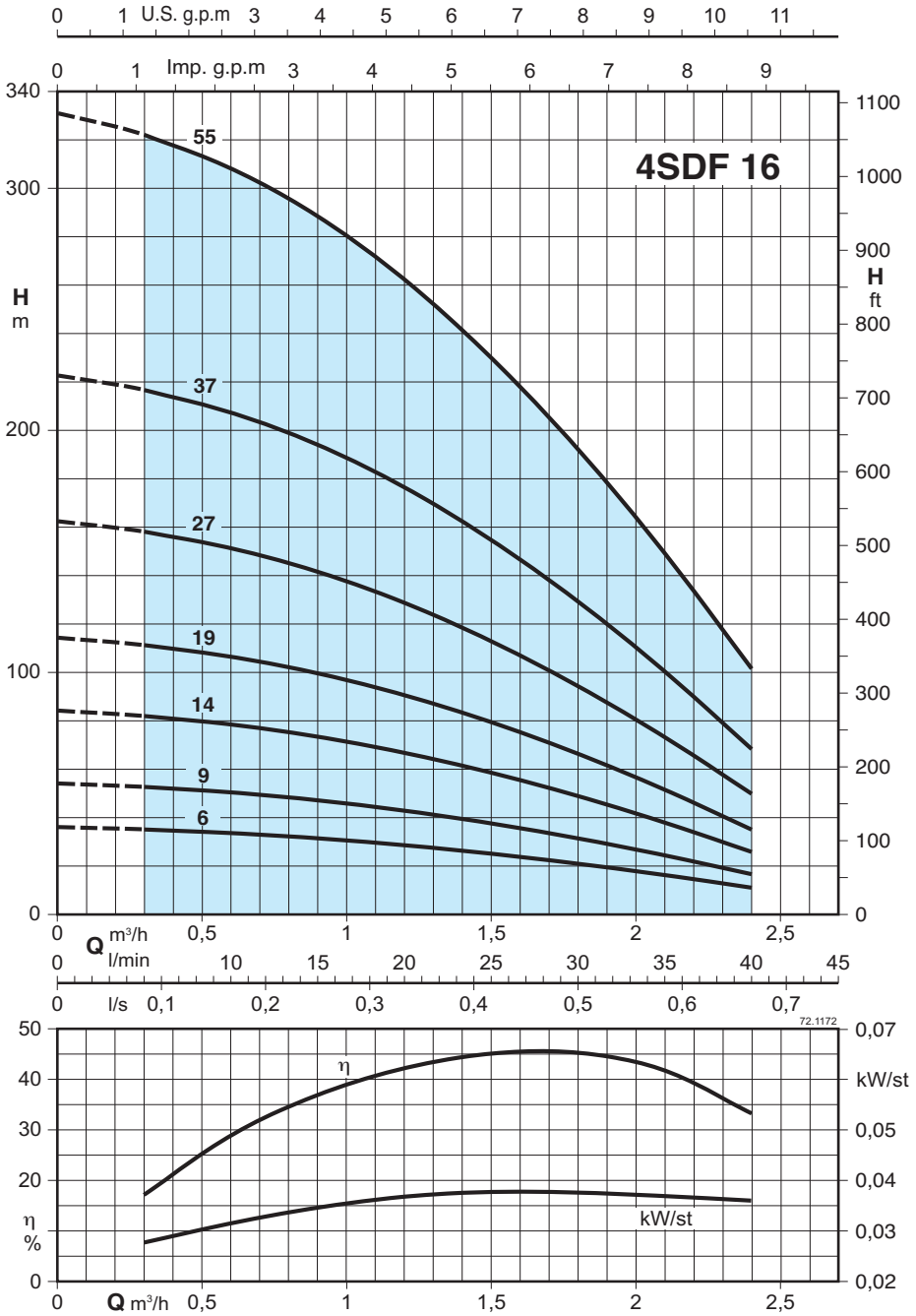

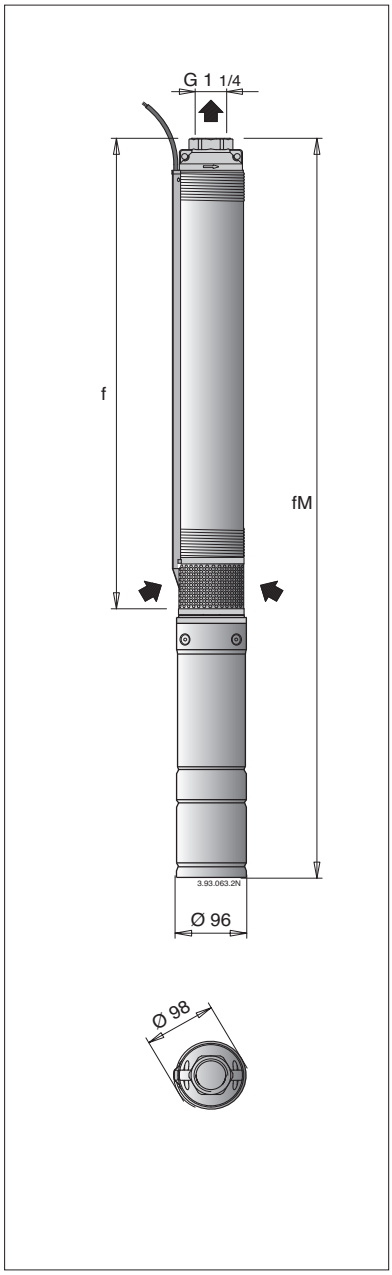

3~ 400 V (380-415) 50 Hz A	1~ 230V A	Capacitor* 450 Vc µF	P1 kW	P2 kW	HP	Q m³/h / l/min	0 / 0	0,3 / 5	0,6 / 10	0,9 / 15	1,2 / 20	1,5 / 25	1,8 / 30	2,1 / 35	2,4 / 40
							n ≈ 2900 rpm								
4SDF 16/6EC 1,2	4SDFM 16/6EC	3,2	16	0,62	0,37	0,5	H m	36,1	35,1	33,6	31,5	28,6	25,1	21	16,3	11,1
4SDF 16/9EC 1,2	4SDFM 16/9EC	3,2	16	0,7	0,37	0,5		54,2	52,7	50,4	47,2	42,9	37,6	31,4	24,4	16,6
4SDF 16/14EC 1,5	4SDFM 16/14EC	4	25	0,89	0,55	0,75		84,3	82	78,5	73,4	66,8	58,5	48,9	38	25,8
4SDF 16/19EC 2	4SDFM 16/19EC	5,6	35	1,22	0,75	1		114	111	106	100	90,6	79,5	66,4	51,5	35,1
4SDF 16/27EC 2,9	4SDFM 16/27EC	8,4	40	1,82	1,1	1,5		163	158	151	142	129	113	94,3	73,2	49,8
4SDF 16/37EC 4,2	4SDFM 16/37EC	11,2	60	2,33	1,5	2		223	217	207	194	176	155	129	100	68,3
4SDF 16/55EC 5,5	4SDFM 16/55EC	14,7	70	3,27	2,2	3		331	322	308	288	262	230	192	149	102

f mm	4SDF fM mm	4SDF kg	4SDFM fM mm	4SDFM kg
305	632	11	632	11,1
365	692	11,5	692	11,6
465	812	13,4	827	12,7
565	927	15,6	967	14,8
725	1127	18	1172	17,4
915	1362	21,7	1382	22,8
1325	1727	24,6	1842	30,6

P_1 Max. power input P_2 Rated motor power output * Only for single-phase motor 230 V - 50 Hz (on request) Tolerances according to UNI EN ISO 9906:2012

CALPEDA ROMANIA - INFINITY PUMPS SRL
Tel: 0268.33.47.47 / 0722.244.944
vanzari@calpeda.ro | www.calpeda.ro

4SDF 22

Submersible borehole pumps for 4” wells

Characteristic curves, performance n ≈ 2900 rpm, dimensions and weights

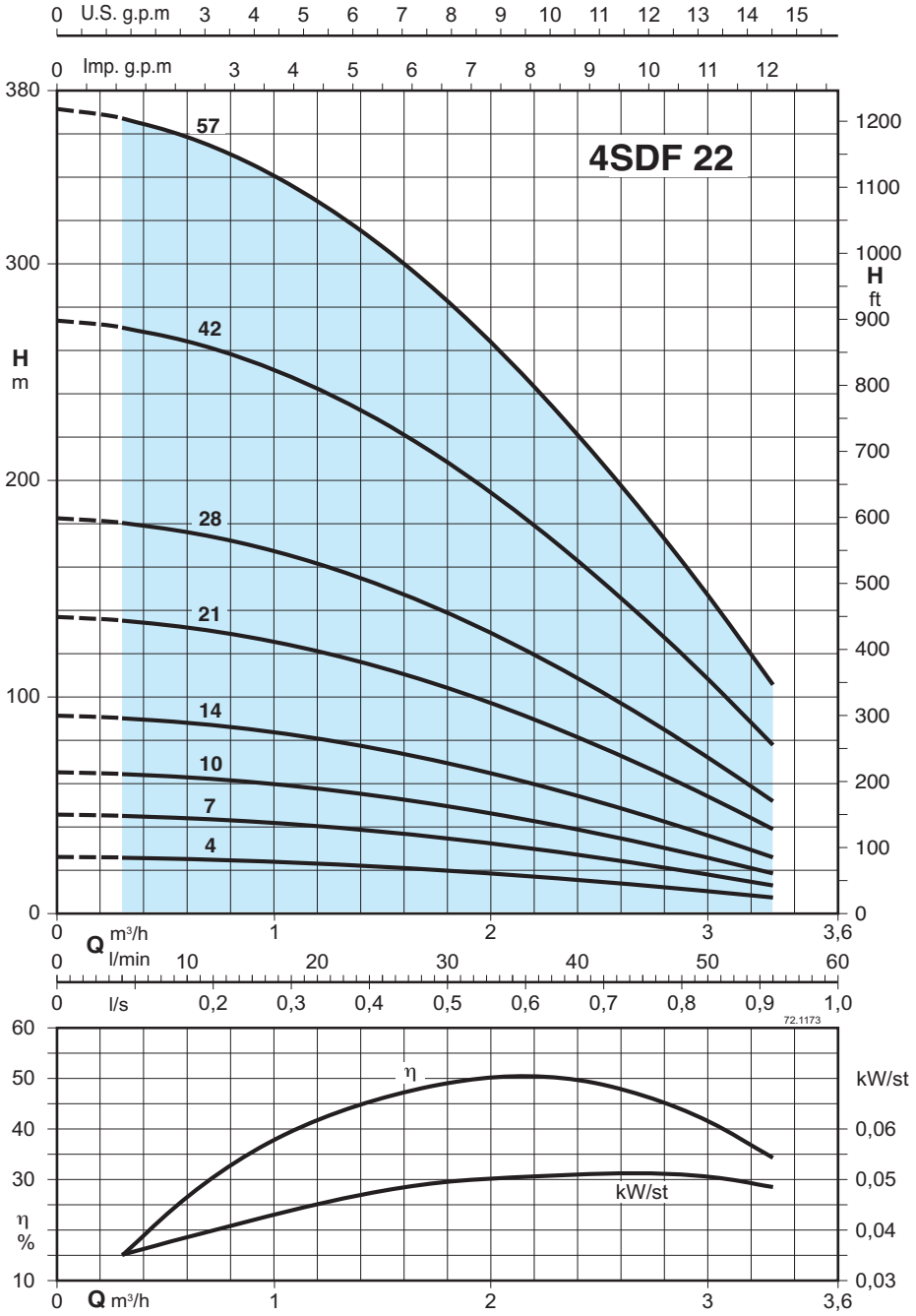

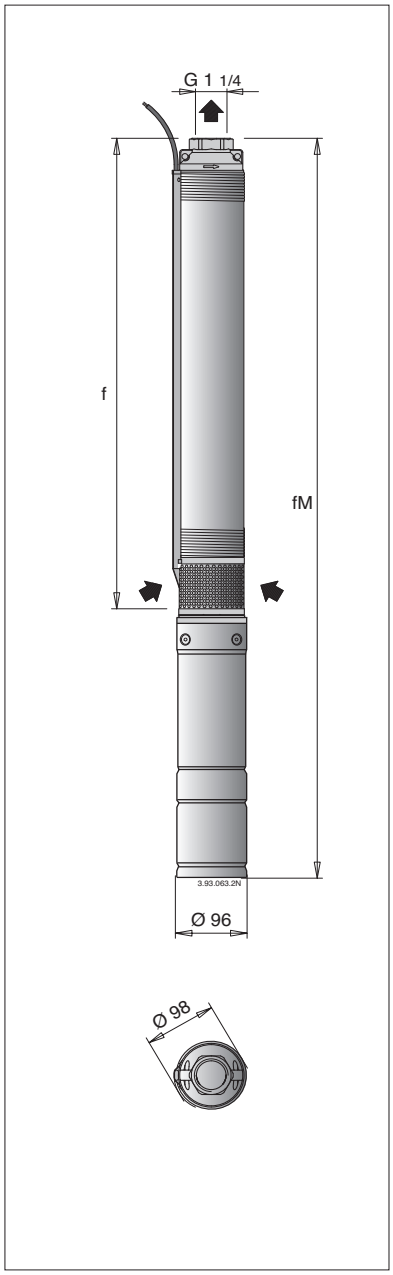

3~ 400 V (380-415) 50 Hz A	1~ 230V A	* Capacitor 450 Vc µF	P1 kW	P2 kW	P2 HP	Q m³/h / l/min	n ≈ 2900 rpm 0 / 0	0,3 / 5	0,6 / 10	0,9 / 15	1,2 / 20	1,5 / 25	1,8 / 30	2,4 / 40	3 / 50	3,3 / 55	f mm	4SDF fM mm	4SDF kg	4SDFM fM mm	4SDFM kg
4SDF 22/4EC 1,2	4SDFM 22/4EC	3,2	16	0,62	0,37	0,5	H m	26,1	25,8	25,2	24,3	23,1	21,6	19,8	15,5	10,3	7,4	265	592	10,6	592	10,6
4SDF 22/7EC 1,2	4SDFM 22/7EC	3,2	16	0,7	0,37	0,5		45,6	45,1	44	42,5	40,4	37,8	34,7	27,1	18	13	325	652	11,2	652	11,1
4SDF 22/10EC 1,5	4SDFM 22/10EC	4	25	0,89	0,55	0,75		65,2	64,4	62,9	60,7	57,7	54	49,6	38,8	25,8	18,5	385	732	10,7	747	13,4
4SDF 22/14EC 2	4SDFM 22/14EC	5,6	35	1,22	0,75	1		91,2	90,2	88,1	84,9	80,8	75,6	69,5	54,3	36,1	25,9	465	827	12,2	867	15,4
4SDF 22/21EC 2,9	4SDFM 22/21EC	8,4	40	1,82	1,1	1,5		137	135	132	127	121	113	104	81,4	54,1	38,9	605	1007	14,7	1052	18,5
4SDF 22/28EC 4,2	4SDFM 22/28EC	11,2	60	2,33	1,5	2		182	180	176	170	162	151	139	109	72,2	51,9	745	1192	17,4	1212	20,9
4SDF 22/42EC 5,5	4SDFM 22/42EC	14,7	70	3,27	2,2	3		274	271	264	255	242	227	208	163	108	77,8	1015	1417	28,4	1532	25,8
4SDF 22/57EC 7,4					3	4		371	367	359	346	329	308	283	221	147	106	1365	1846	33		

P_1 Max. power input P_2 Rated motor power output * Only for single-phase motor 230 V - 50 Hz (on request) Tolerances according to UNI EN ISO 9906:2012

CALPEDA ROMANIA - INFINITY PUMPS SRL
Tel: 0268.33.47.47 / 0722.244.944
vanzari@calpeda.ro | www.calpeda.ro

4SDF 36

Submersible borehole pumps for 4” wells

Characteristic curves, performance n ≈ 2900 rpm, dimensions and weights

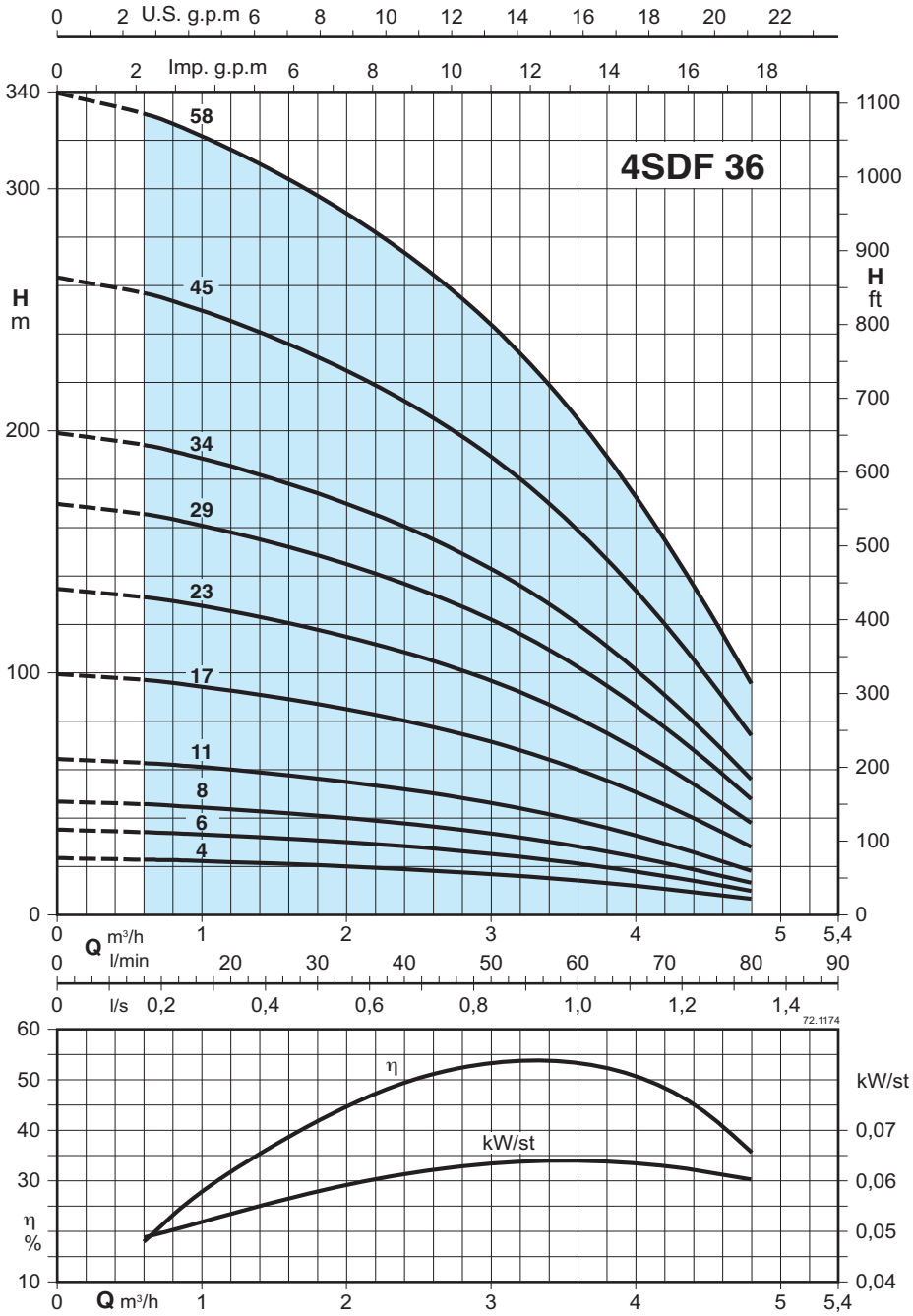

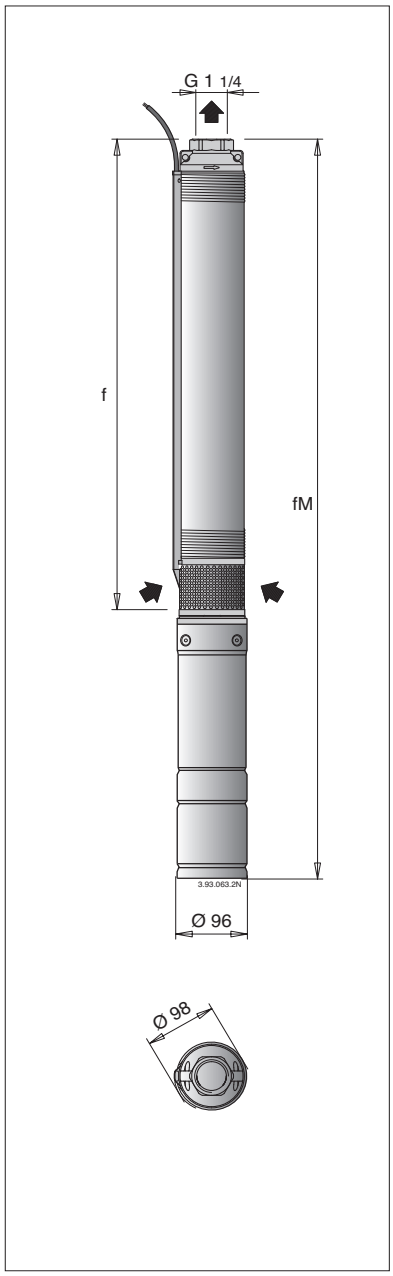

3~ 400 V (380-415) 50 Hz A	1~ 230V	Capacitor* 450 Vc A	μF	P1 kW	P2 kW	P2 HP	Q m³/h / l/min	0	0,6	1,2	1,8	2,4	3	3,6	4,2	4,8
								0	10	20	30	40	50	60	70	80
4SDF 36/4EC 1,2	4SDFM 36/4EC	3,2	16	0,62	0,37	0,5	H m	23,4	22,8	21,8	20,5	18,8	16,8	14,1	10,7	6,6
4SDF 36/6EC 1,2	4SDFM 36/6EC	3,2	16	0,7	0,37	0,5		35,1	34,2	32,7	30,7	28,3	25,2	21,2	16	9,9
4SDF 36/8EC 1,5	4SDFM 36/8EC	4	25	0,89	0,55	0,75		46,8	45,6	43,6	40,9	37,7	33,6	28,2	21,3	13,2
4SDF 36/11EC 2	4SDFM 36/11EC	5,6	35	1,22	0,75	1		64,3	62,7	59,9	56,3	51,8	46,2	38,8	29,4	18,1
4SDF 36/17EC 2,9	4SDFM 36/17EC	8,4	40	1,82	1,1	1,5		99,4	96,9	92,6	87	80,1	71,4	60	45,4	28
4SDF 36/23EC 4,2	4SDFM 36/23EC	11,2	60	2,33	1,5	2		134	131	125	118	108	96,6	81,2	61,4	37,8
4SDF 36/29EC 5,5	4SDFM 36/29EC	14,7	70	3,27	2,2	3		170	165	158	148	137	122	102	77,4	47,7
4SDF 36/34EC 5,5	4SDFM 36/34EC	14,7	70	3,27	2,2	3		199	194	185	174	160	143	120	90,7	55,9
4SDF 36/45EC 7,4					3	4		263	256	245	230	212	189	159	120	74
4SDF 36/58EC 9,4					4	5,5		339	331	316	297	273	244	205	155	95,4

f mm	4SDF fM mm	4SDF kg	4SDFM fM mm	4SDFM kg
306	633	10,7	633	10,6
366	693	11,1	693	11
426	773	10,6	788	13,3
517	879	12,2	919	15,4
699	1101	14,7	1146	18,5
880	1327	17,5	1347	21
1063	1465	27,3	1580	24,7
1213	1694	28,7	1730	26,1
1590	2136	28,4		
1981	2627	34,3		

P_1 Max. power input P_2 Rated motor power output * Only for single-phase motor 230 V - 50 Hz (on request) Tolerances according to UNI EN ISO 9906:2012

CALPEDA ROMANIA - INFINITY PUMPS SRL
Tel: 0268.33.47.47 / 0722.244.944
vanzari@calpeda.ro | www.calpeda.ro

4SDF 46

Submersible borehole pumps for 4” wells

Characteristic curves, performance n ≈ 2900 rpm, dimensions and weights

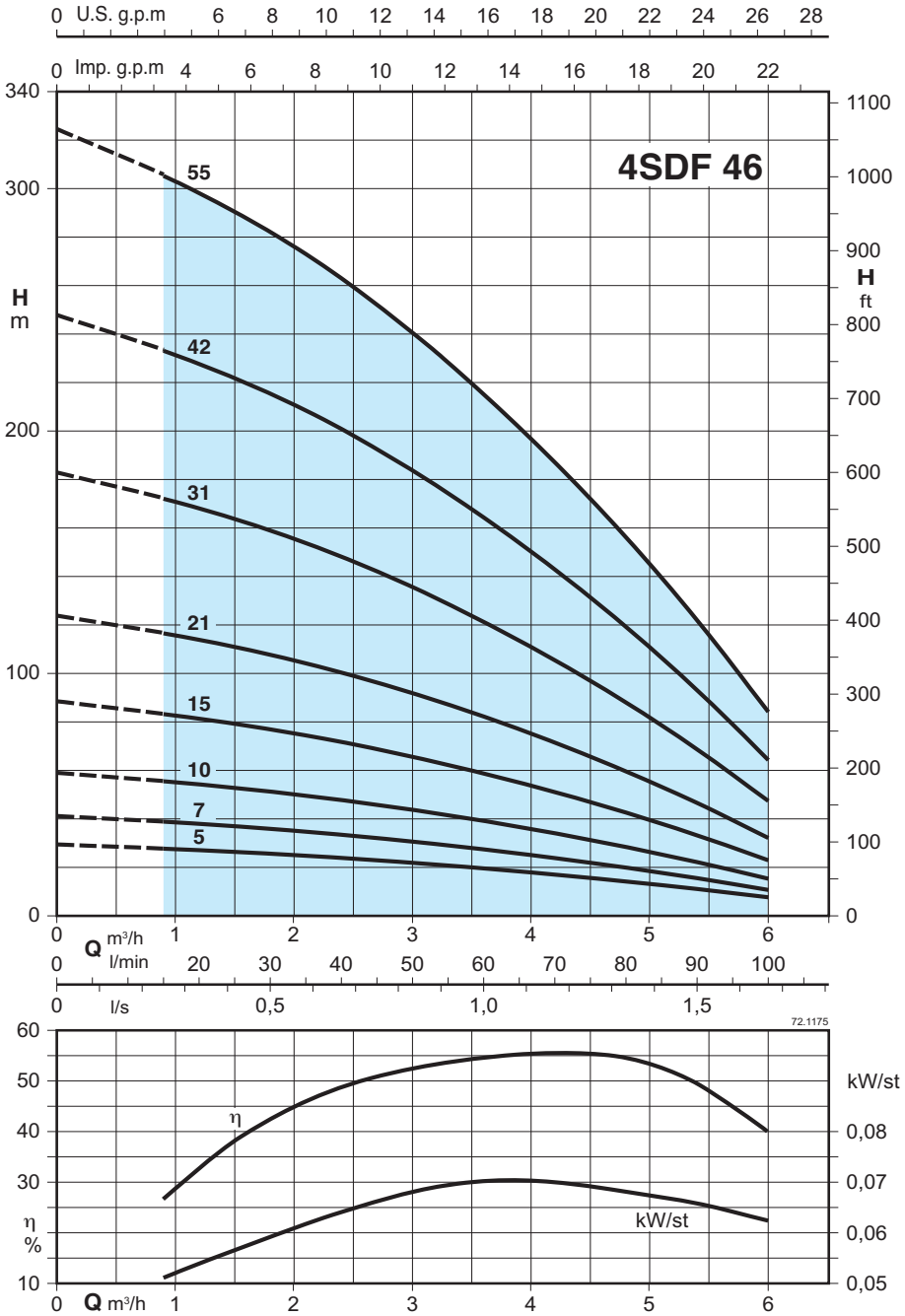

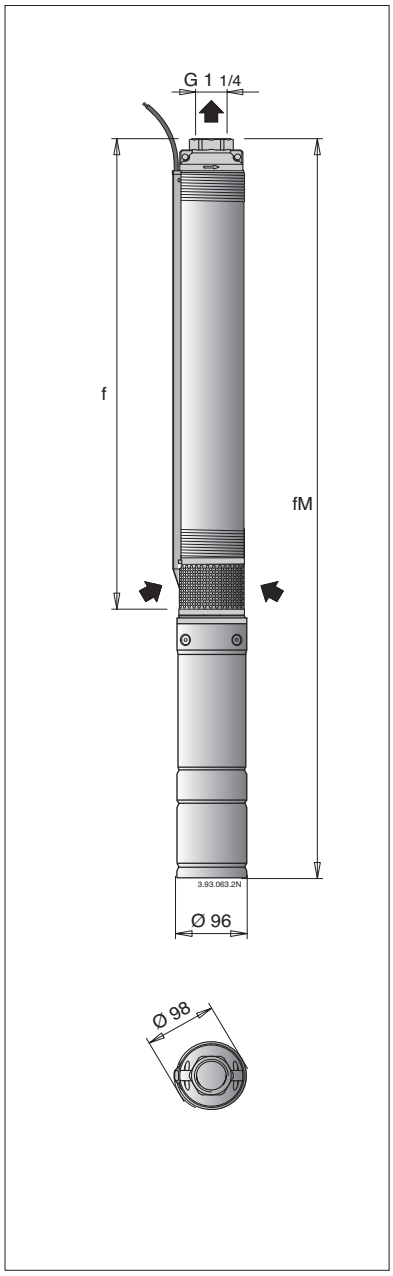

3~ 400 V (380-415) 50 Hz A	1~ 230V A	Capacitor 450 Vc µF	P1 kW	P2 kW	P2 HP	Q m³/h / l/min	0 / 0	0,9 / 15	1,2 / 20	1,8 / 30	2,4 / 40	3 / 50	3,6 / 60	4,2 / 70	4,8 / 80	6 / 100	f mm	4SDF fM mm	4SDF kg	4SDFM fM mm	4SDFM kg
4SDF 46/5EC	1,2	4SDFM 46/5EC	3,2	16	0,7	0,37	0,5	H m	29,4	27,8	27,1	25,6	23,9	21,9	19,6	17	14,2	7,6	315	642	10,9	642	10,8
4SDF 46/7EC	1,5	4SDFM 46/7EC	4	25	0,89	0,55	0,75		41,2	38,9	37,9	35,9	33,5	30,6	27,4	23,8	19,9	10,7	370	717	10,4	732	13,1
4SDF 46/10EC	2	4SDFM 46/10EC	5,6	35	1,22	0,75	1		58,9	55,5	54,2	51,3	47,8	43,7	39,1	34	28,4	15,3	450	812	11,8	852	15
4SDF 46/15EC	2,9	4SDFM 46/15EC	8,4	40	1,82	1,1	1,5		88,3	83,3	81,3	76,9	71,7	65,6	58,7	51	42,6	22,9	585	987	14	1032	17,8
4SDF 46/21EC	4,2	4SDFM 46/21EC	11,2	60	2,33	1,5	2		124	117	114	108	100	91,9	82,2	71,4	59,6	32,1	740	1187	16,7	1207	20,2
4SDF 46/31EC	5,5	4SDFM 46/31EC	14,7	70	3,27	2,2	3		183	172	168	159	148	136	121	105	88	47,4	1005	1407	27,2	1522	24,6
4SDF 46/42EC	7,4					3	4		247	233	228	215	201	184	164	143	119	64,2	1340	1821	31,5		
4SDF 46/55EC	9,4					4	5,5		324	305	298	282	263	241	215	187	156	84,1	1685	2231	38,6		

P1 Max. power input P2 Rated motor power output * Only for single-phase motor 230 V - 50 Hz (on request) Tolerances according to UNI EN ISO 9906:2012

CALPEDA ROMANIA - INFINITY PUMPS SRL
Tel: 0268.33.47.47 / 0722.244.944
vanzari@calpeda.ro | www.calpeda.ro

4SDF 54

Submersible borehole pumps for 4” wells

Characteristic curves, performance n ≈ 2900 rpm, dimensions and weights

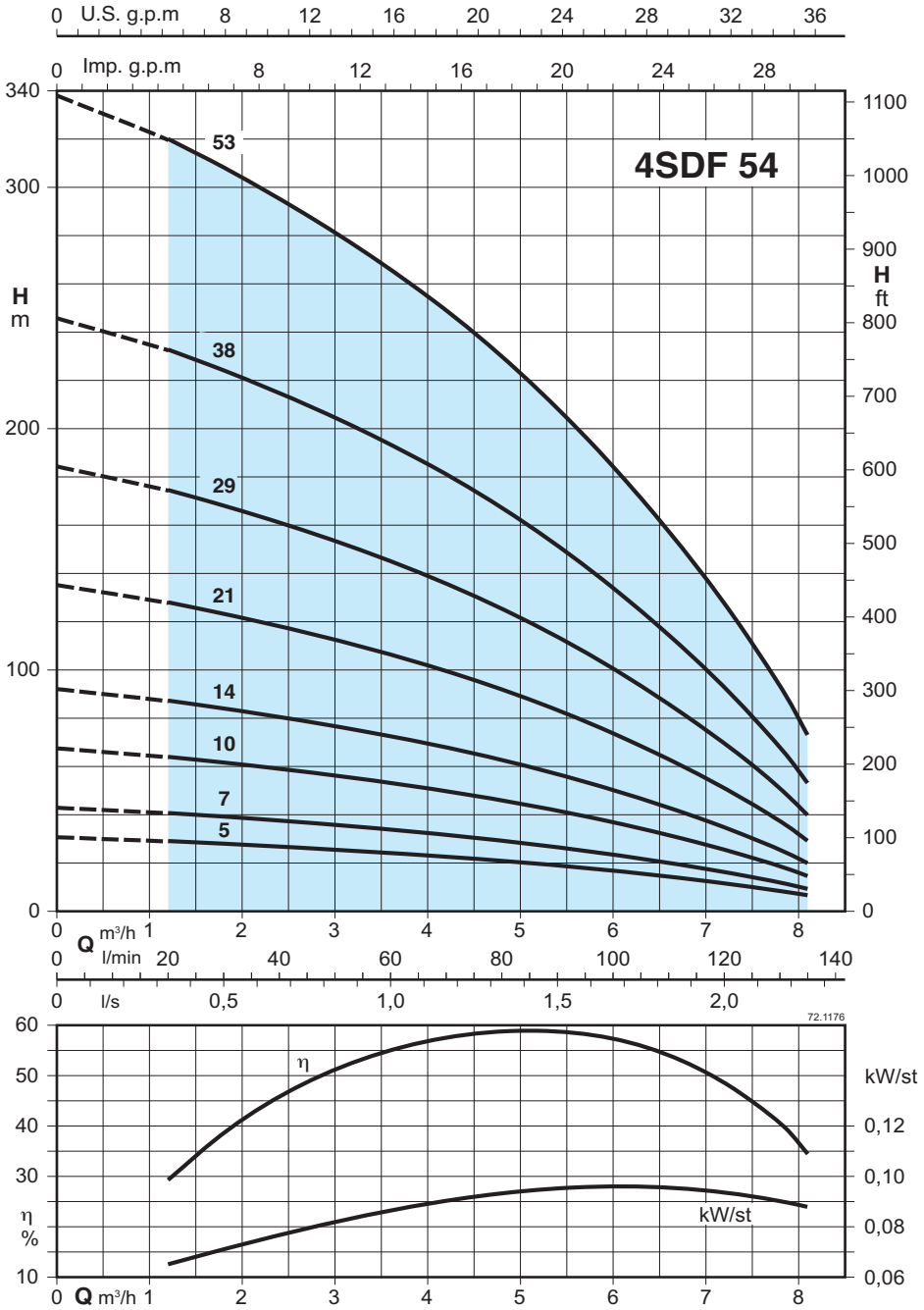

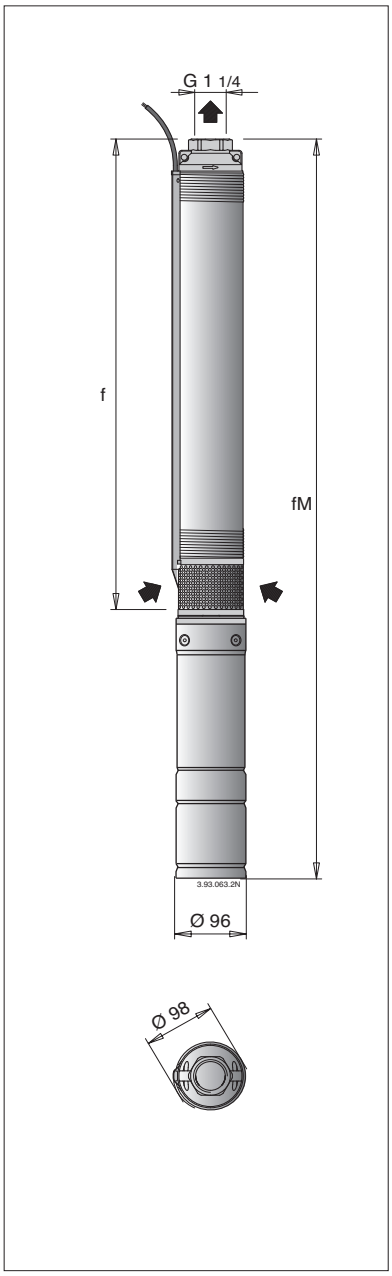

3~ 400 V (380-415) 50 Hz A	1~ 230V A	Capacitor 450 Vc µF	P1 kW	P2 kW	P2 HP	Q m³/h / l/min	0 / 0	1,2 / 20	1,8 / 30	2,4 / 40	3 / 50	3,6 / 60	4,8 / 80	6 / 100	7,2 / 120	8,1 / 135
							n ≈ 2900 rpm									
4SDF 54/5EC	1,5	4SDFM 54/5EC	4	25	0,89	0,55	0,75	H m	30,8	29,1	28	26,8	25,6	24,2	20,9	16,8	11,6	6,6
4SDF 54/7EC	2	4SDFM 54/7EC	5,6	35	1,22	0,75	1		43,1	40,7	39,2	37,6	35,8	33,8	29,3	23,5	16,3	9,3
4SDF 54/10EC	2,9	4SDFM 54/10EC	8,4	40	1,82	1,1	1,5		67,7	64	61,6	59,1	56,3	53,2	46	36,9	25,6	14,6
4SDF 54/14EC	4,2	4SDFM 54/14EC	11,2	60	2,33	1,5	2		92,3	87,3	84,1	80,5	76,7	72,5	62,7	50,3	34,8	19,9
4SDF 54/21EC	5,5	4SDFM 54/21EC	14,7	70	3,27	2,2	3		135	128	123	118	113	106	92	73,7	51,1	29,2
4SDF 54/29EC	7,4					3	4		185	175	168	161	153	145	125	101	69,7	39,9
4SDF 54/38EC	9,4					4	5,5		246	233	224	215	205	193	167	134	92,9	53,1
4SDF 54/53EC	13					5,5	7,5		338	320	308	295	281	266	230	184	128	73,1

f mm	4SDF fM mm	4SDF kg	4SDFM fM mm	4SDFM kg
340	687	9,9	702	12,6
400	762	11,2	802	14,4
490	892	13	937	16,8
610	1057	15,4	1077	18,9
820	1222	25,4	1337	22,8
1060	1541	28,8		
1380	1926	35,6		
1830	2476	41,8		

P_1 Max. power input P_2 Rated motor power output * Only for single-phase motor 230 V - 50 Hz (on request) Tolerances according to UNI EN ISO 9906:2012

CALPEDA ROMANIA - INFINITY PUMPS SRL
Tel: 0268.33.47.47 / 0722.244.944
vanzari@calpeda.ro | www.calpeda.ro

4SD 10

Submersible borehole pumps for 4” wells

Characteristic curves, performance n ≈ 2900 rpm, dimensions and weights

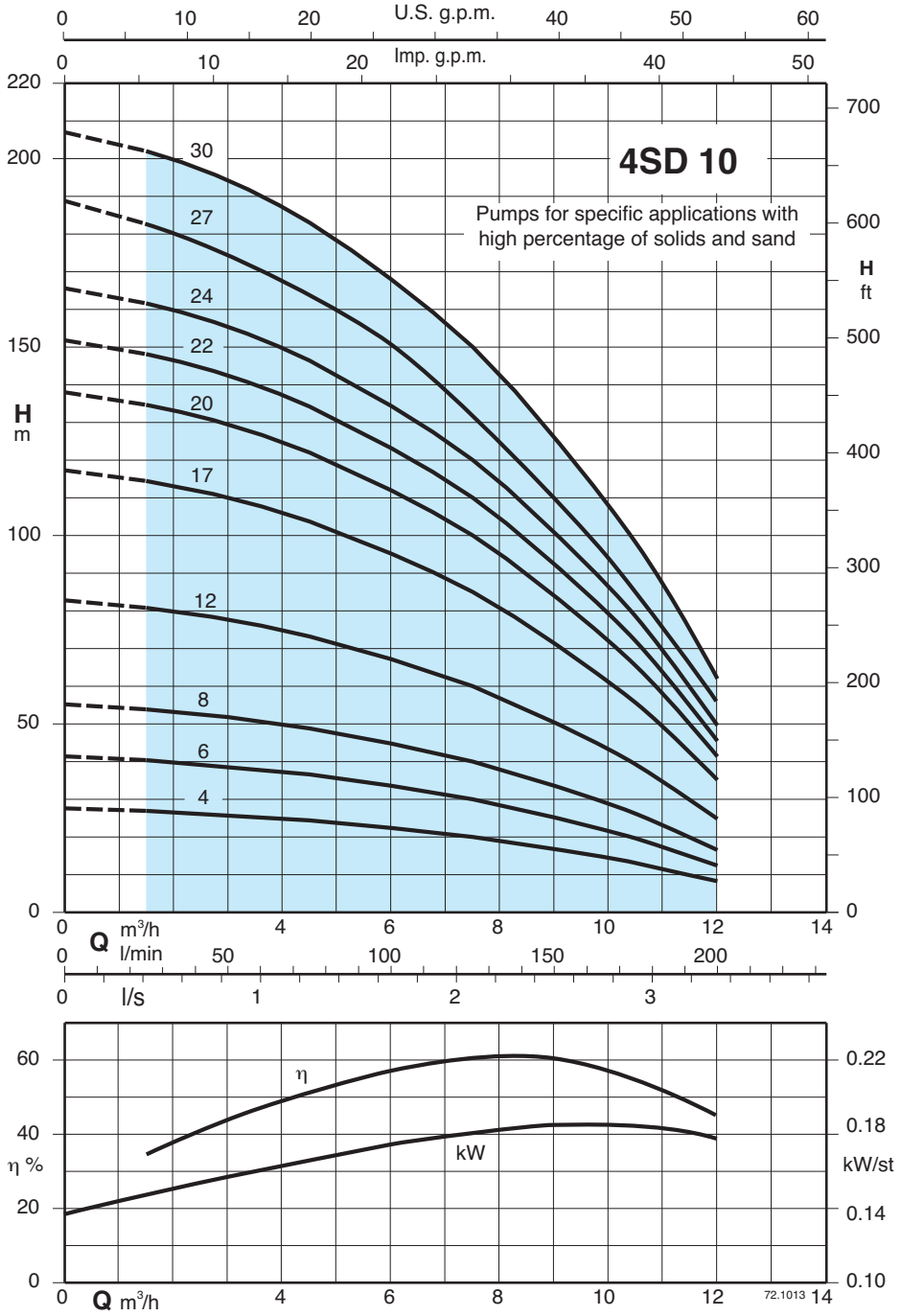

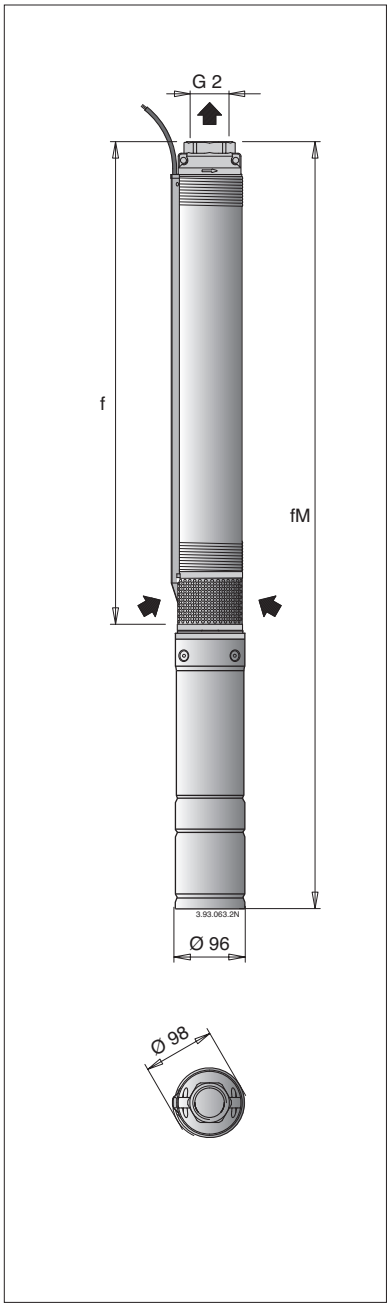

3~ 400 V (380-415) 50 Hz A	1~ 230V A	Capacitor* 450 Vc µF	P1 kW	P2 kW	P2 HP	Q m³/h / l/min	1,5 / 25	2,4 / 40	3 / 50	3,6 / 60	4,8 / 80	6 / 100	7,2 / 120	8,4 / 140	9,6 / 160	10,8 / 180	12 / 200	f mm	4SD fM mm	4SD kg	4SDM fM mm	4SDM kg
							n ≈ 2900 rpm															
4SD 10/4EC 2	4SDM 10/4EC	5,6	35	1,22	0,75	1	H m	27	26	26	25	24	23	20	18	15	12	8	409	771	11,6	811	14,1
4SD 10/6EC 2.9	4SDM 10/6EC	8,4	40	1,82	1,1	1,5		40	39	39	38	36	34	31	27	23	18	12	515	917	13,4	962	16,7
4SD 10/8EC 4,2	4SDM 10/8EC	11,2	60	2,33	1,5	2		54	53	52	51	48	45	41	36	30	25	16	621	1068	15,7	1088	18,6
4SD 10/12EC 5,5	4SDM 10/12EC	14,7	70	3,27	2,2	3		81	79	78	76	72	67	61	54	46	37	25	833	1235	25,9	1350	22,7
4SD 10/17EC 7,4					3	4		114	112	111	108	102	95	87	76	65	52	35	1098	1579	28		
4SD 10/20EC 9,4					4	5,5		134	132	130	127	120	112	102	90	76	61	41	1312	1858	36		
4SD 10/22EC 9,4					4	5,5		148	145	143	139	132	123	112	99	84	67	45	1418	1964	36,8		
4SD 10/24EC 9,4					4	5,5		162	158	156	152	144	134	122	108	91	74	50	1524	2070	37,6		
4SD 10/27EC 13					5,5	7,5		182	178	176	171	162	151	138	122	103	83	56	1683	2329	41,1		
4SD 10/30EC 13					5,5	7,5		202	198	195	190	180	168	153	135	114	92	62	1842	2488	42,1		

P_1 Max. power input P_2 Rated motor power output * Only for single-phase motor 230 V - 50 Hz (on request) Tolerances according to UNI EN ISO 9906:2012

CALPEDA ROMANIA - INFINITY PUMPS SRL
Tel: 0268.33.47.47 / 0722.244.944
vanzari@calpeda.ro | www.calpeda.ro

4SD 15

Submersible borehole pumps for 4” wells

Characteristic curves, performance n ≈ 2900 rpm, dimensions and weights

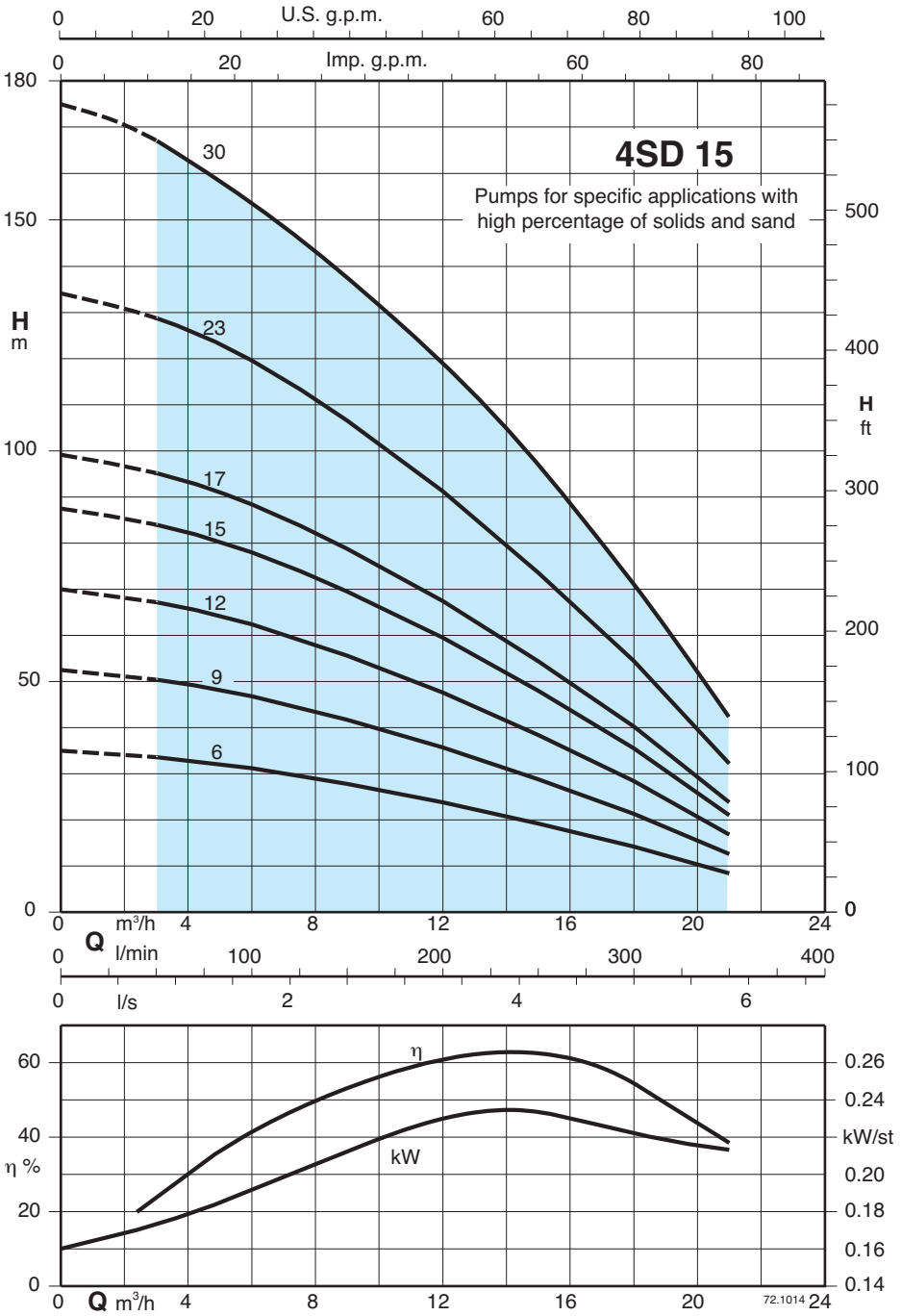

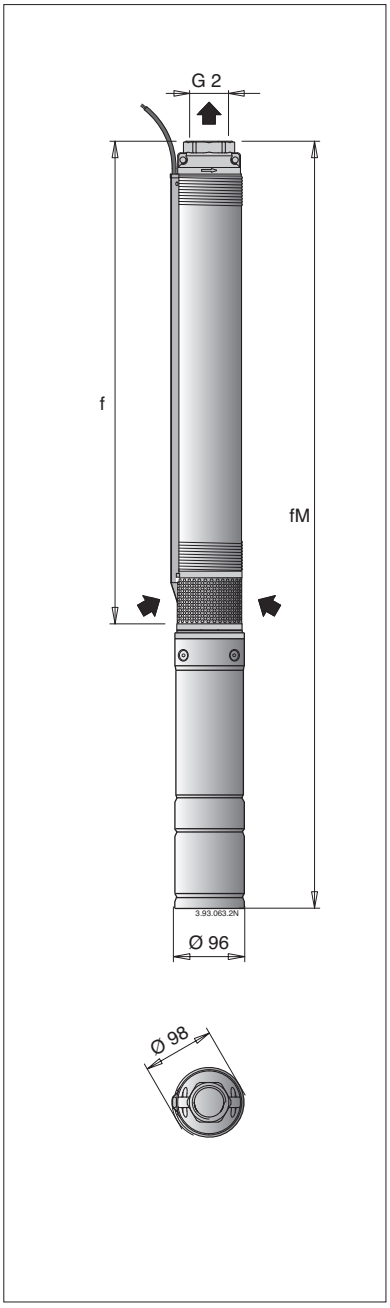

3~	400 V (380-415) 50 Hz A	1~	* 230V Capacitor P1 A	μF	kW	P2 kW	HP	Q m³/h l/min	n ≈ 2900 rpm 3	3,6	4,8	6	7,2	8,4	9,6	10,8	12	15	18	21	f mm	4SD fM mm	kg	4SDM fM mm	kg
									50	60	80	100	120	140	160	180	200	250	300	350					
4SD 15/6EC	4,2	4SDM 15/6EC	11,2	60	2,33	1,5	2	H m	33	33	32	31	30	29	28	26	24	19	14	8	755	1202	15,6	1222	18,5
4SD 15/9EC	5,5	4SDM 15/9EC	14,7	70	3,27	2,2	3		50	49	48	47	45	43	42	38	36	29	21	13	988	1390	33	1505	30,2
4SD 15/12EC	7,4					3	4		67	66	64	62	59	57	56	51	48	38	28	17	1299	1780	34,3		
4SD 15/15EC	9,4					4	5,5		84	83	81	78	74	71	69	64	59	48	35	21	1601	2147	40,6		
4SD 15/17EC	9,4					4	5,5		95	94	92	88	84	81	79	72	67	54	40	24	1756	2302	41,4		
4SD 15/23EC	13					5,5	7,5		129	127	124	120	114	109	107	98	91	74	54	32	2291	2937	49,4		
4SD 15/30E	18,8					7,5[1]	10[1]		168	166	162	156	149	142	140	128	119	97	70	42	2836	3610	62		

P_1 Max. power input P_2 Rated motor power output * Only for single-phase motor 230 V - 50 Hz (on request) Tolerances according to UNI EN ISO 9906:2012

[1] Franklin motor

CALPEDA ROMANIA - INFINITY PUMPS SRL
Tel: 0268.33.47.47 / 0722.244.944
vanzari@calpeda.ro | www.calpeda.ro

6SDN 12

Submersible borehole pumps for 6” wells

Characteristic curves, performance n ≈ 2900 rpm, dimensions and weights

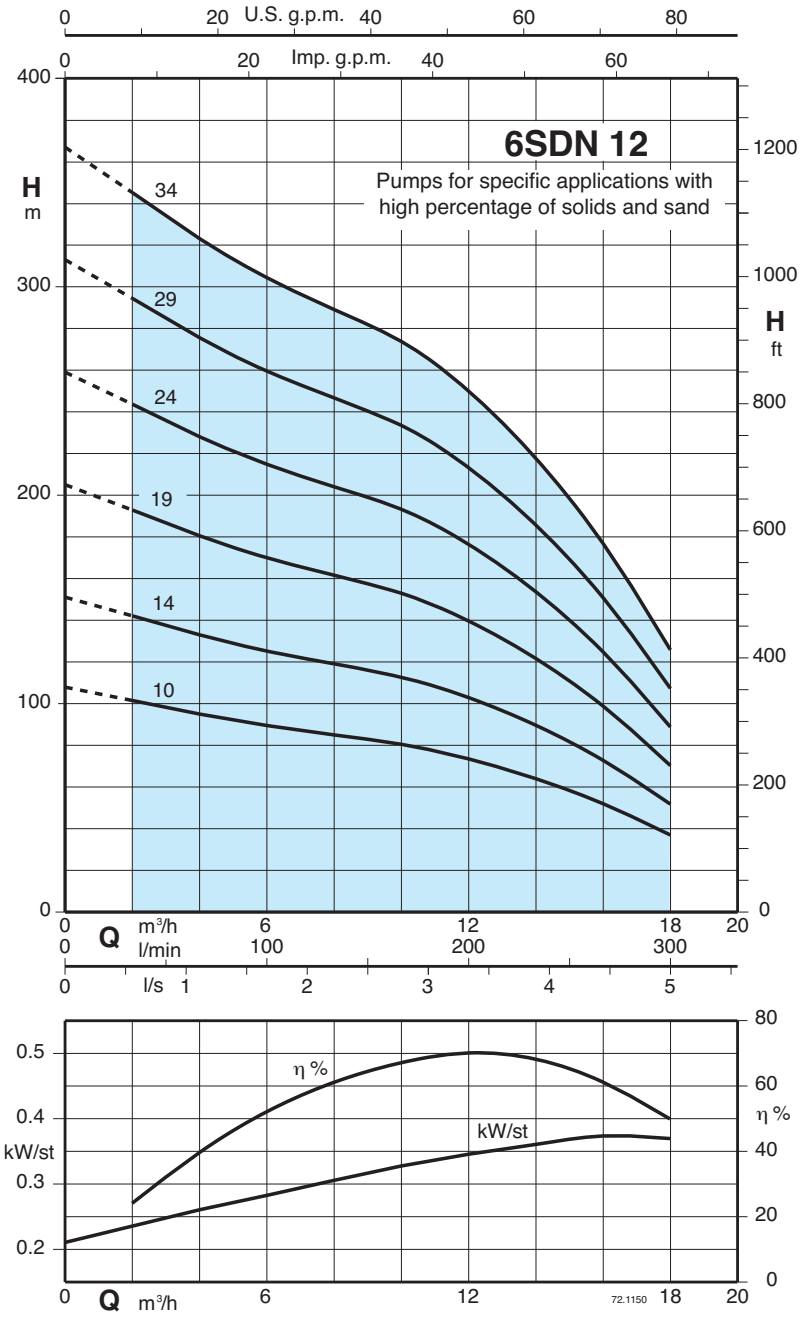

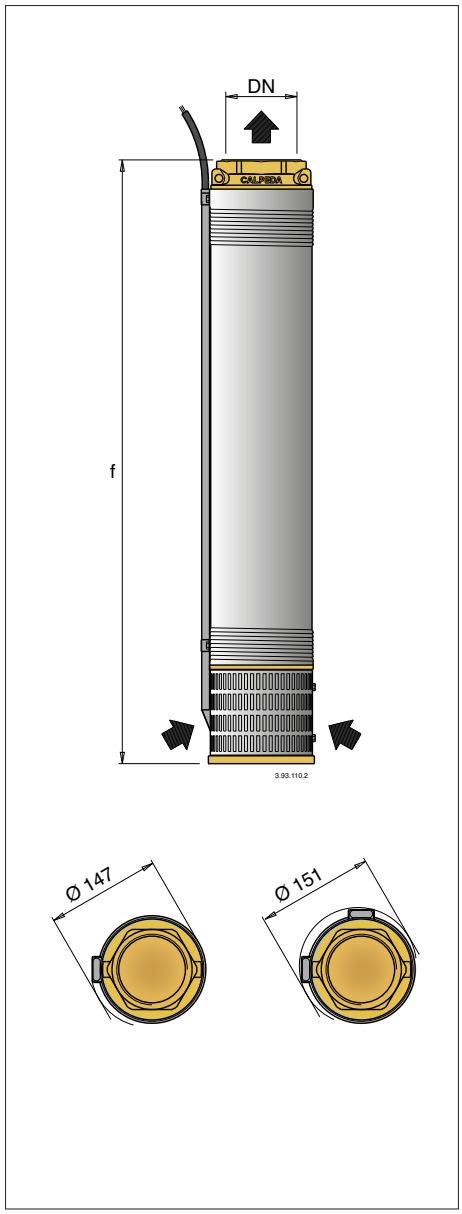

3 ~	P2		Q	n ≈ 2900 rpm											
			m³/h	2	4	6	8	10	12	14	16	18			
	kW	HP	l/min	33,3	66,6	100	133,3	166,6	200	233	266	300			
6SDN 12/10	4	5,5	H m	102	95	89,5	85	80,5	73,5	64	52	37			
6SDN 12/14	5,5	7,5		142	133	125	119	113	103	89,5	73	52			
6SDN 12/19	7,5	10		193	181	170	162	153	140	122	99	70,5			
6SDN 12/24	9,2	12,5		244	231	215	204	193	176	154	125	89			
6SDN 12/29	11	15		294	276	260	247	233	213	186	151	107			
6SDN 12/34	13 (15)	17,5 (20)		345	323	304	289	274	250	218	177	126			

DN	f	
	mm	kg
G 3 ISO 228	715	15,5
	870	17,5
	1060	20
	1320	23
	1510	25,7
	1705	28,5

P2 Rated motor power output (...) FK motor rated power output **H** Total head in m Tolerances according to UNI EN ISO 9906:2012

CALPEDA ROMANIA - INFINITY PUMPS SRL
Tel: 0268.33.47.47 / 0722.244.944
vanzari@calpeda.ro | www.calpeda.ro

6SDN 16

Submersible borehole pumps for 6” wells

Characteristic curves, performance n ≈ 2900 rpm, dimensions and weights

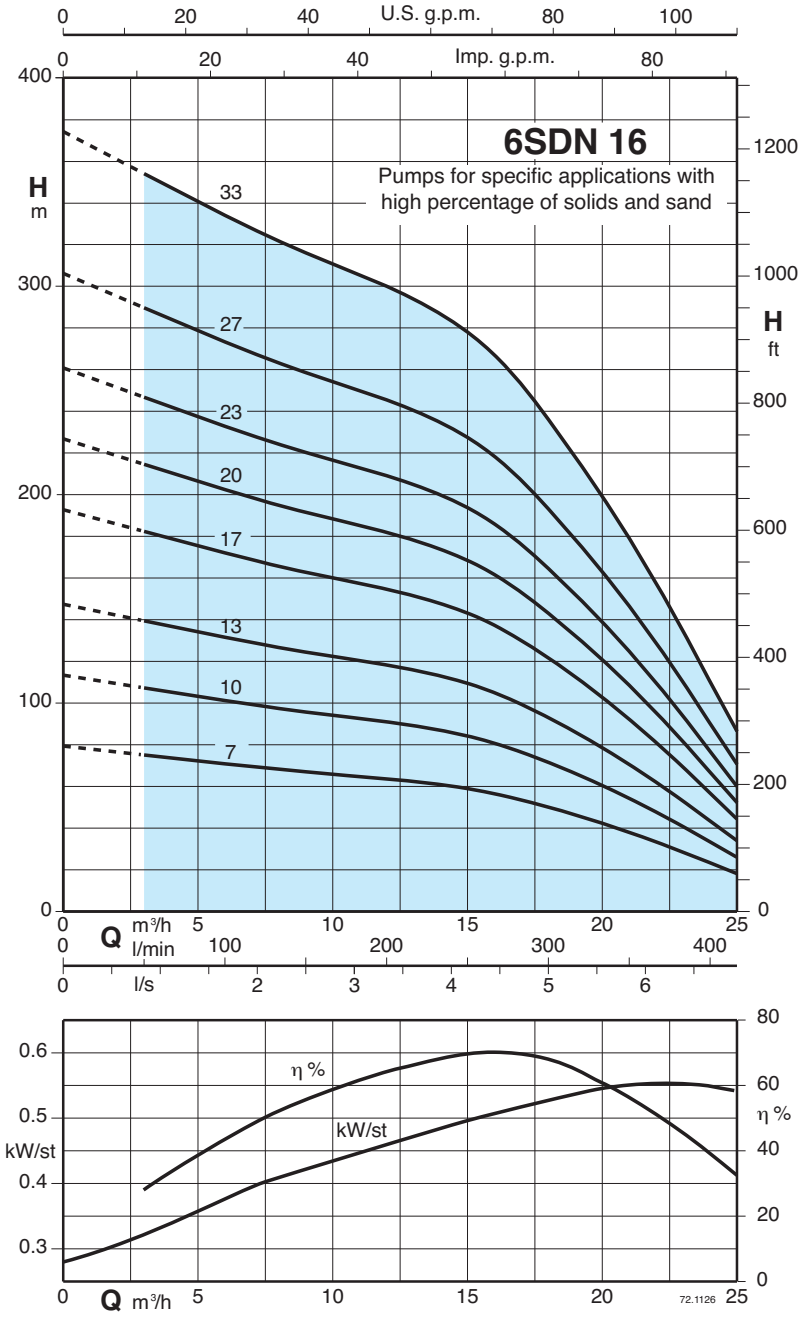

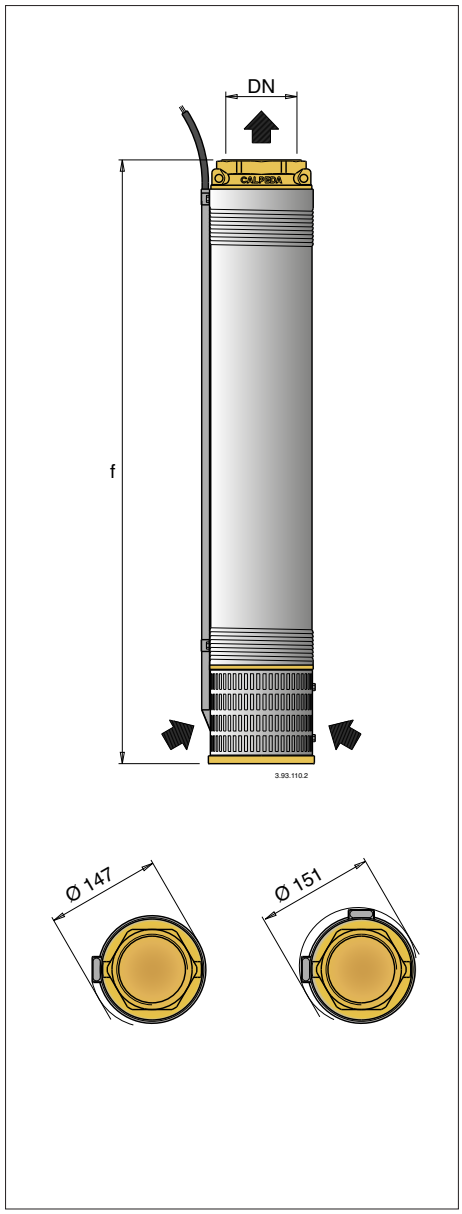

3 ~	P2		Q	n ≈ 2900 rpm											
			m³/h	3	6	9	12	15	18	21	25				
	kW	HP	l/min	50	100	150	200	250	300	350	416,6				
6SDN 16/7	4	5,5	H m	75	71	67	63,5	59	50	38	18,5				
6SDN 16/10	5,5	7,5		107	101	96	91	84	71,5	54,5	26				
6SDN 16/13	7,5	10		139	132	124	118	110	93	70,5	34				
6SDN 16/17	9,2	12,5		182	172	163	155	143	122	92,5	44,5				
6SDN 16/20	11	15		215	202	192	182	168	143	109	52,5				
6SDN 16/23	13 (15)	17,5 (20)		247	233	220	209	194	165	125	60				
6SDN 16/27	15	20		290	273	259	245	227	193	147	71				
6SDN 16/33	18,5	25		354	334	316	300	278	236	179	86,5				

DN	f	
	mm	kg
G 3 ISO 228	600	14
	715	15,5
	830	17
	985	19
	1100	20,5
	1285	22,5
	1435	24,6
	1665	28

P2 Rated motor power output (...) FK motor rated power output **H** Total head in m Tolerances according to UNI EN ISO 9906:2012

CALPEDA ROMANIA - INFINITY PUMPS SRL
Tel: 0268.33.47.47 / 0722.244.944
vanzari@calpeda.ro | www.calpeda.ro

6SDN 21

Submersible borehole pumps for 6” wells

Characteristic curves, performance n ≈ 2900 rpm, dimensions and weights

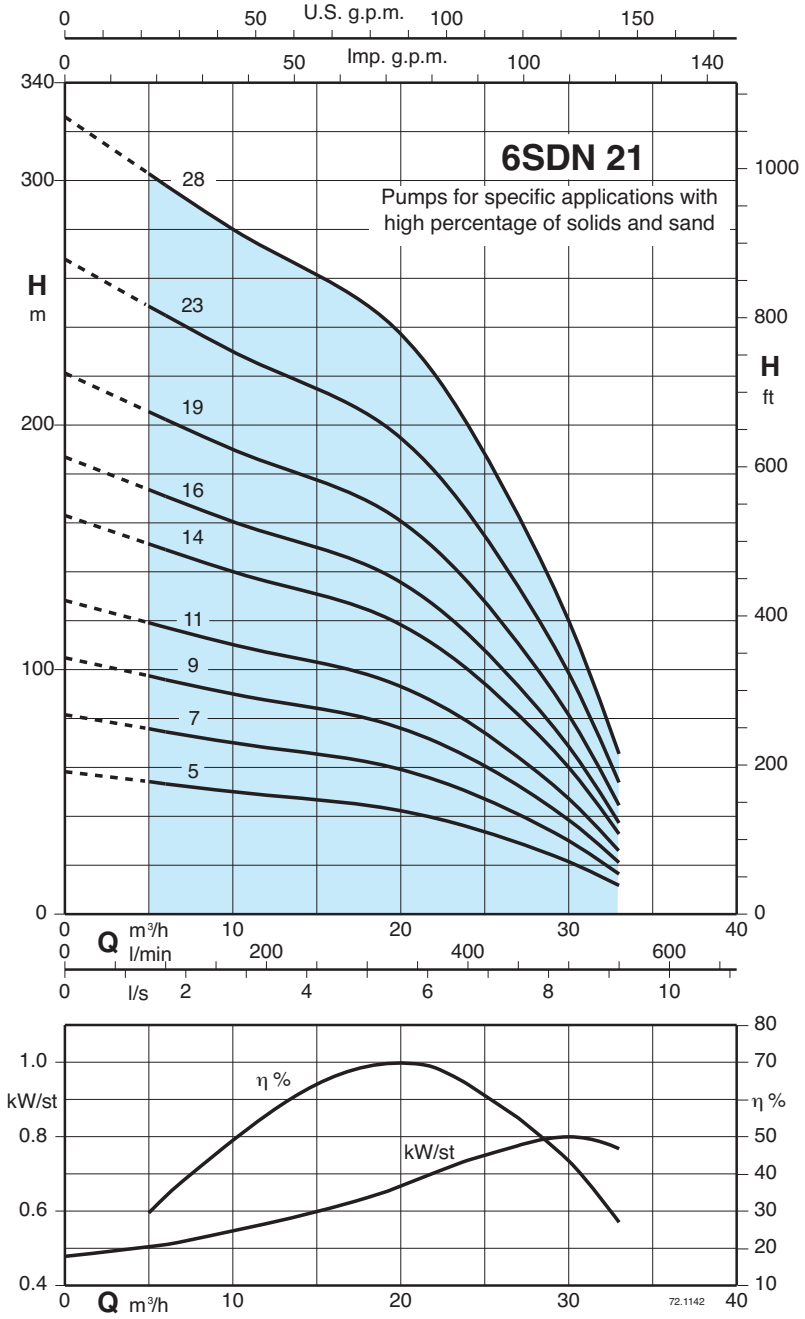

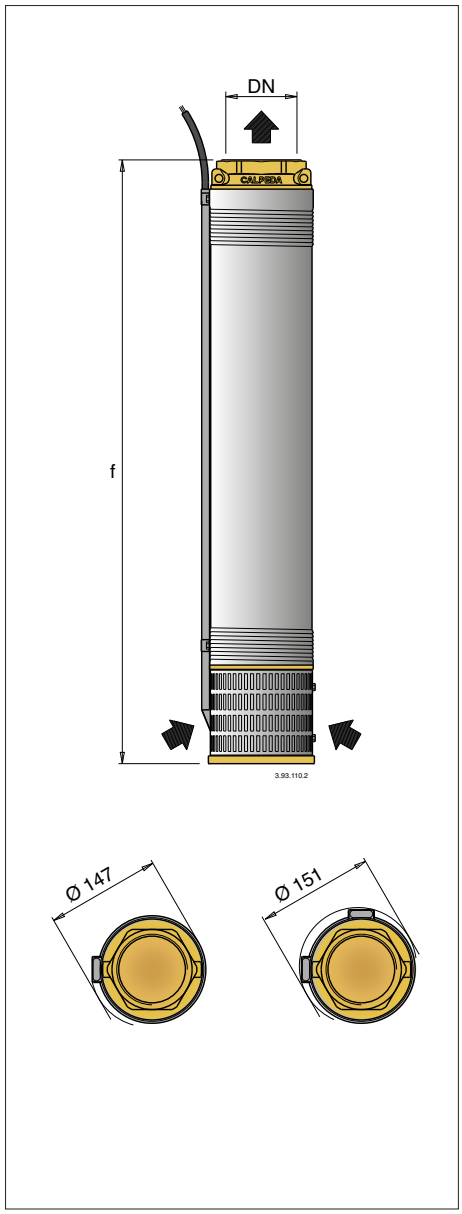

3 ~	P2		Q	n ≈ 2900 rpm											
			m³/h	5	9	12	15	18	21	24	27	30	33		
	kW	HP	l/min	83,3	150	200	250	300	350	400	450	500	550		
6SDN 21/5	4	5,5	H m	54	51	48,5	46,5	45	41,5	36	29	21,5	11,5		
6SDN 21/7	5,5	7,5		75,5	71,5	68	65	62,5	58	50	41	30	16		
6SDN 21/9	7,5	10		97	92	87,5	83,5	80,5	74,5	64,5	53	38,5	21		
6SDN 21/11	9,2	12,5		119	112	107	102	99	91	79	64	47	25,5		
6SDN 21/14	11	15		151	143	136	130	125	116	100	81,5	60	32,5		
6SDN 21/16	13 (15)	17,5 (20)		173	163	155	149	143	132	114	93	69	37		
6SDN 21/19	15	20		205	194	185	176	170	157	136	111	81,5	44		
6SDN 21/23	18,5	25		249	235	224	213	206	190	164	134	99	53		
6SDN 21/28	22	30		303	286	272	260	251	231	200	163	120	64,5		

DN	f	
	mm	kg
G 3 ISO 228	565	13,3
	660	14,5
	755	15,7
	850	16,9
	990	18,7
	1085	19,9
	1225	21,7
	1480	24,5
	1710	27,5

P2 Rated motor power output (...) FK motor rated power output **H** Total head in m Tolerances according to UNI EN ISO 9906:2012

CALPEDA ROMANIA - INFINITY PUMPS SRL
Tel: 0268.33.47.47 / 0722.244.944
vanzari@calpeda.ro | www.calpeda.ro

6SD 18

Submersible borehole pumps for 6” wells

Characteristic curves, performance n ≈ 2900 rpm, dimensions and weights

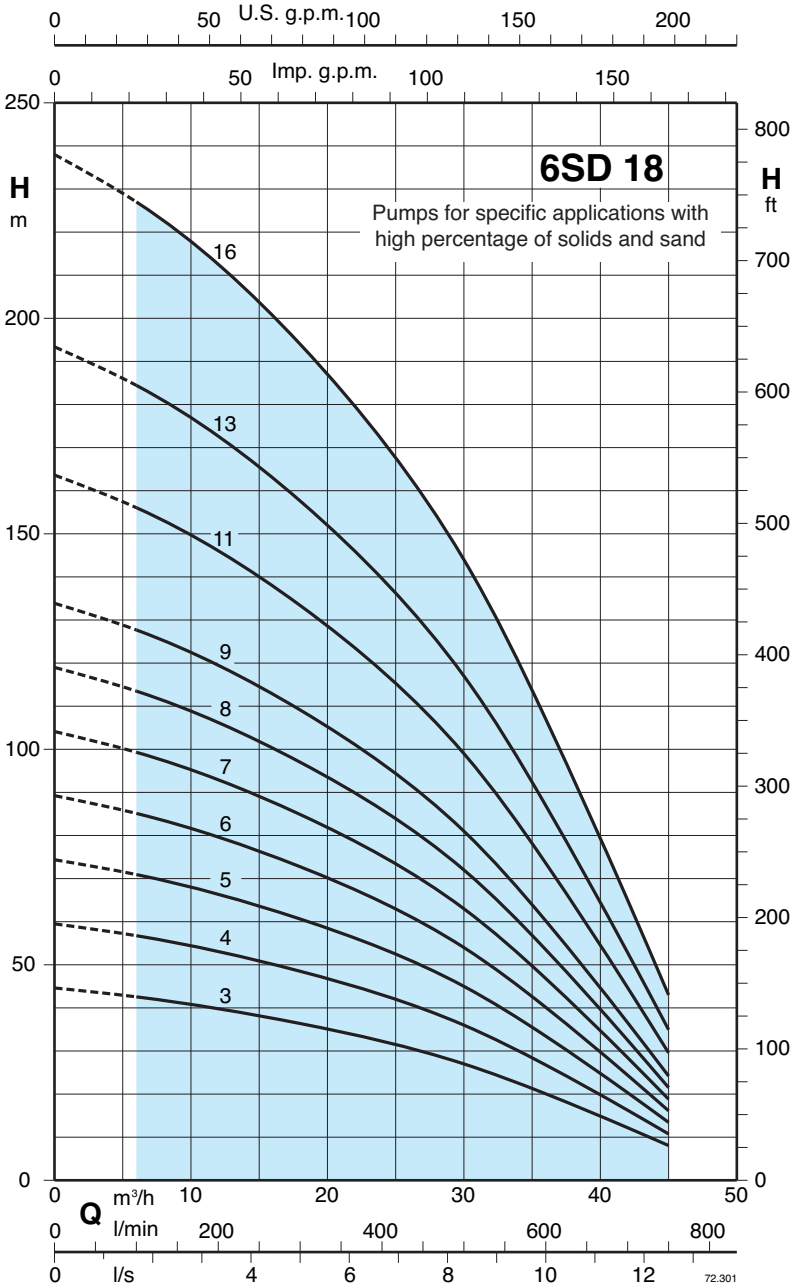

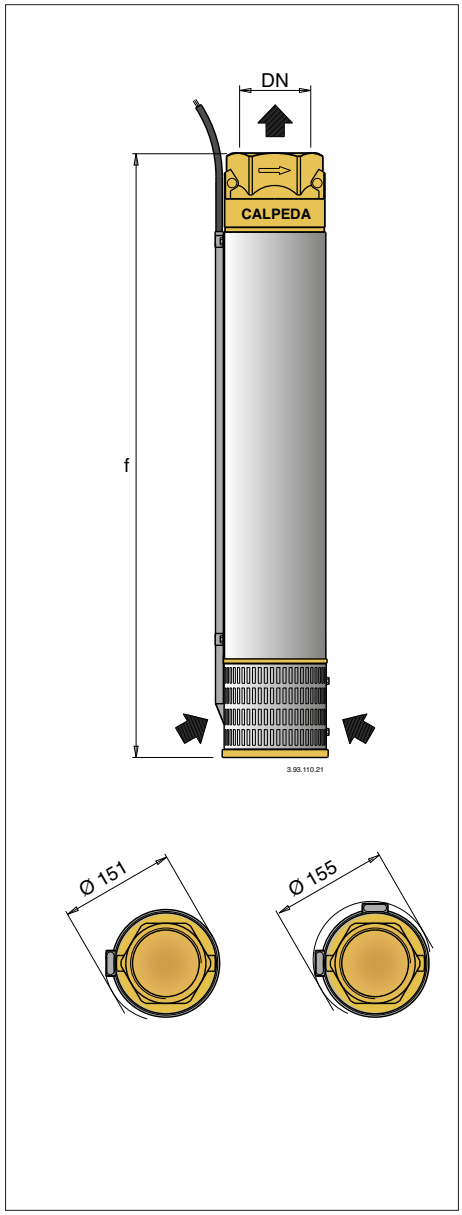

3 ~	P2		Q	n ≈ 2900 rpm											
			m³/h	6	12	18	24	30	36	42	45				
	kW	HP	l/min	100	200	300	400	500	600	700	750				
6SD 18/3	4	5,5	H m	42	39	36	32	27	20	12	8				
6SD 18/4	5,5	7,5		56	53	48	43	36	27	16	11				
6SD 18/5	7,5	10		70	66	60	53	45	34	21	13				
6SD 18/6	9,2	12,5		85	79	72	64	54	40	25	16				
6SD 18/7	9,2	12,5		100	93	84	75	63	46	28	19				
6SD 18/8	11	15		113	105	96	86	72	54	32	21				
6SD 18/9	13 (15)	17,5 (20)		127	119	108	96	81	60	37	24				
6SD 18/11	15	20		156	145	132	118	99	74	45	30				
6SD 18/13	18,5	25		184	172	157	139	117	87	52	35				
6SD 18/16	22	30		227	213	194	172	144	107	65	43				

DN	f	
	mm	kg
G 3 ISO 228	647	20,5
	756	23
	865	25
	974	27
	1083	29,5
	1192	32
	1301	34,5
	1519	39,5
	1737	43
	2064	50,2

P2 Rated motor power output (...) FK motor rated power output **H** Total head in m Tolerances according to UNI EN ISO 9906:2012

CALPEDA ROMANIA - INFINITY PUMPS SRL
Tel: 0268.33.47.47 / 0722.244.944
vanzari@calpeda.ro | www.calpeda.ro

6SD 19

Submersible borehole pumps for 6” wells

Characteristic curves, performance n ≈ 2900 rpm, dimensions and weights

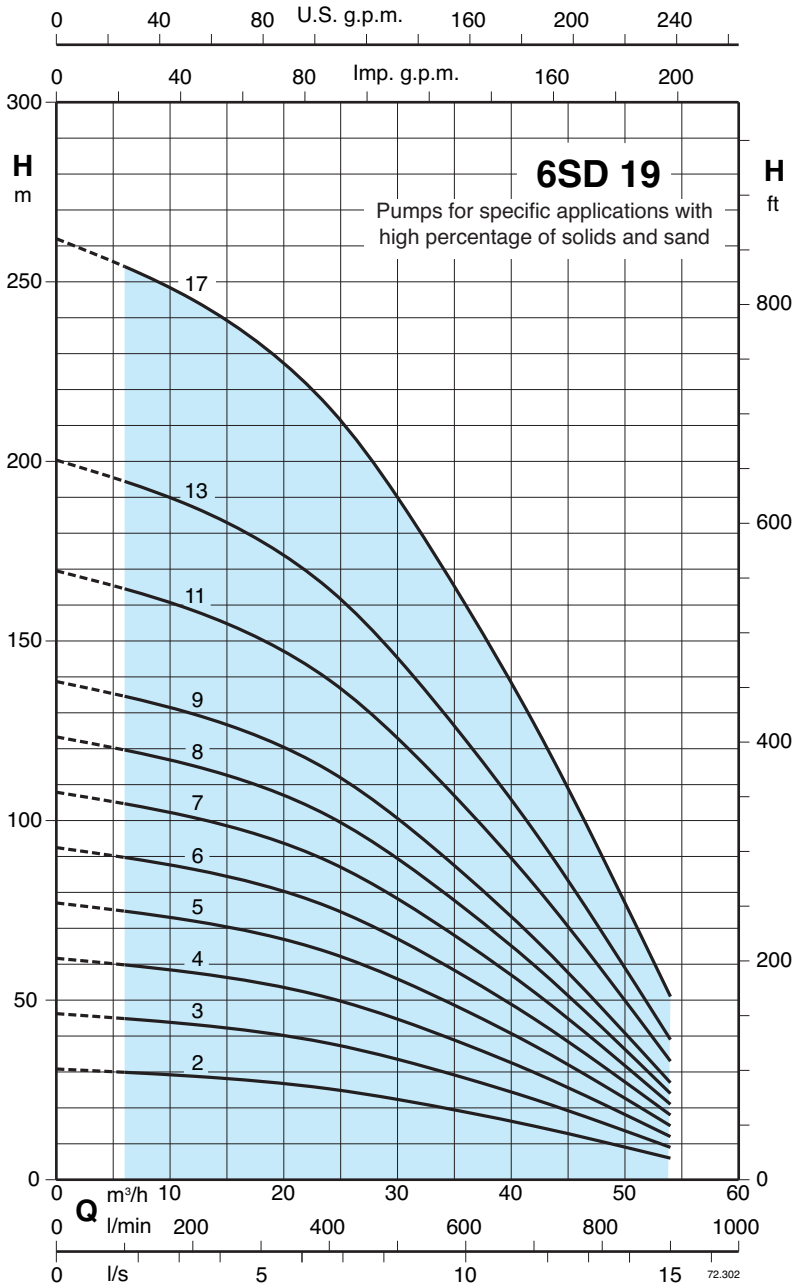

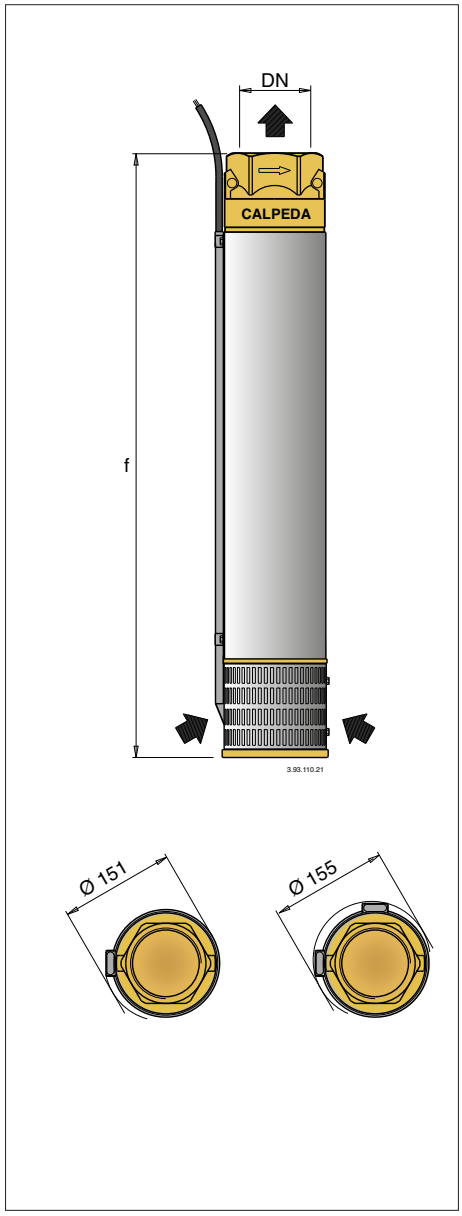

3 ~	P2		Q	n ≈ 2900 rpm											
			m³/h	6	12	18	24	30	36	42	48	54			
	kW	HP	l/min	100	200	300	400	500	600	700	800	900			
6SD 19/2	4	5,5	H m	30	29	27	25	22	19	15	10	6			
6SD 19/3	5,5	7,5		45	43	41	38	33	29	23	15	9			
6SD 19/4	7,5	10		60	57	55	50	45	38	30	21	12			
6SD 19/5	9,2	12,5		75	72	69	63	56	47	38	26	15			
6SD 19/6	11	15		90	86	82	75	67	56	45	31	18			
6SD 19/7	13 (15)	17,5 (20)		105	100	96	88	79	66	53	37	21			
6SD 19/8	15	20		120	115	110	101	89	75	60	42	24			
6SD 19/9	15	20		135	130	123	114	100	85	68	47	27			
6SD 19/11	18,5	25		165	158	151	139	123	104	83	58	33			
6SD 19/13	22	30		195	188	179	164	145	122	98	69	39			
6SD 19/17	30	40		255	245	234	215	190	160	127	90	51			

DN	f	
	mm	kg
G 3 ISO 228	538	18
	647	20,5
	756	23
	865	25
	974	27
	1083	29,5
	1192	32
	1301	34,5
	1519	39,5
	1737	43
	2173	53

P2 Rated motor power output (...) FK motor rated power output **H** Total head in m Tolerances according to UNI EN ISO 9906:2012

CALPEDA ROMANIA - INFINITY PUMPS SRL
Tel: 0268.33.47.47 / 0722.244.944
vanzari@calpeda.ro | www.calpeda.ro

6SD 20

Submersible borehole pumps for 6” wells

Characteristic curves, performance n ≈ 2900 rpm, dimensions and weights

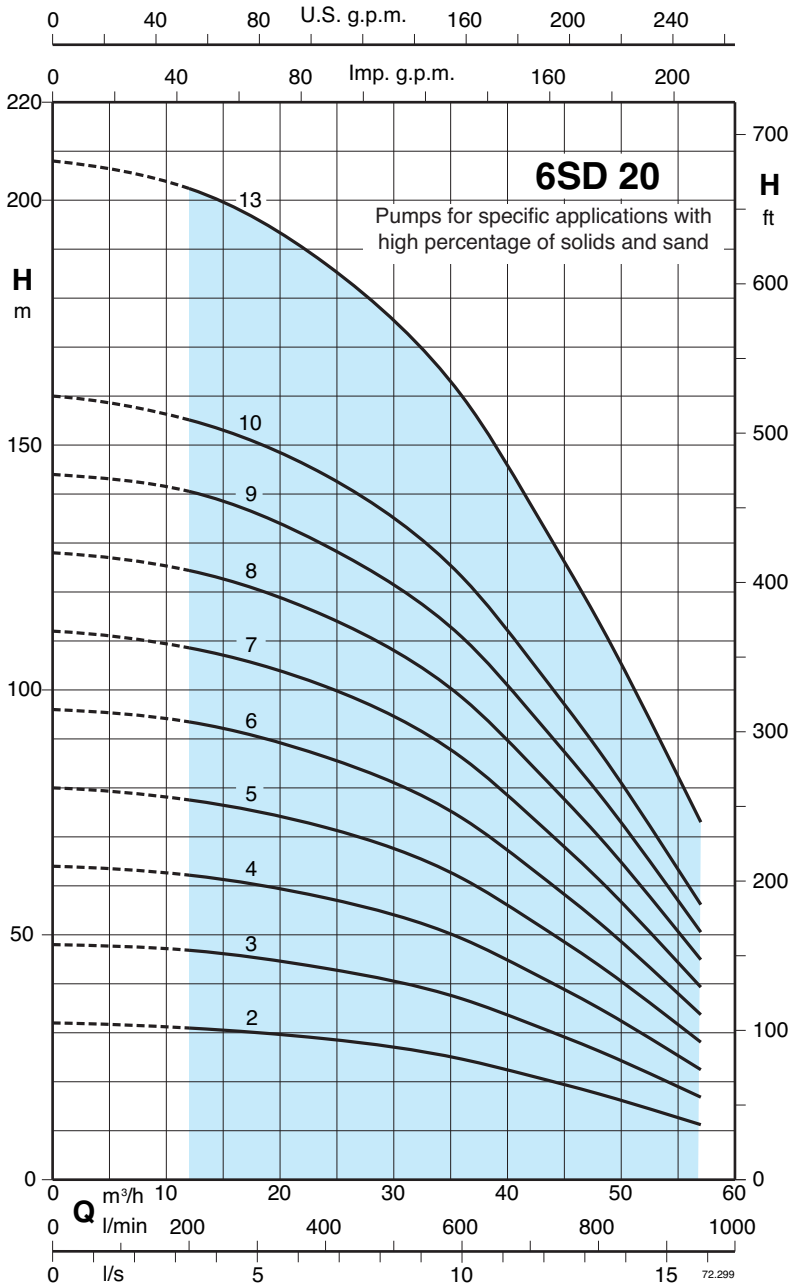

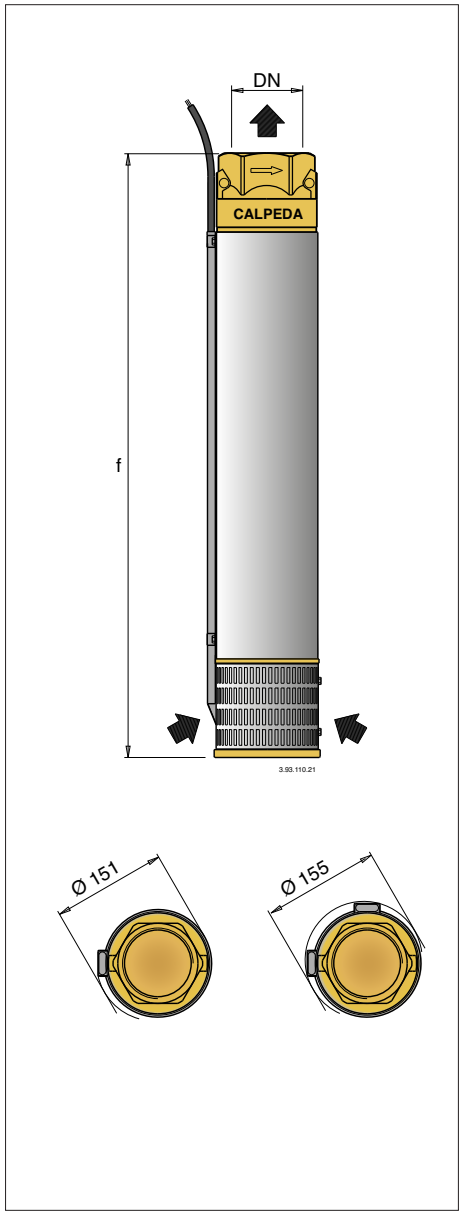

3 ~	P2		Q	n ≈ 2900 rpm											
			m³/h	12	18	24	30	36	42	48	54	57			
	kW	HP	l/min	200	300	400	500	600	700	800	900	950			
6SD 20/2	5,5	7,5	H m	31	30	29	28	24	21	17	13	11			
6SD 20/3	7,5	10		46	45	44	42	37	32	26	20	17			
6SD 20/4	9,2	12,5		62	60	58	55	49	42	35	26	22			
6SD 20/5	11	15		77	76	73	68	61	53	44	33	28			
6SD 20/6	13 (15)	17,5 (20)		93	91	87	83	73	63	53	40	34			
6SD 20/7	15	20		108	106	102	96	86	74	61	47	39			
6SD 20/8	18,5	25		124	120	115	110	99	85	70	53	45			
6SD 20/9	18,5	25		140	136	130	124	111	96	79	60	51			
6SD 20/10	22	30		155	151	144	138	123	106	88	67	56			
6SD 20/13	30	40		202	196	188	179	160	138	114	87	73			

DN	f	
	mm	kg
G 3 ISO 228	538	18
	647	20,5
	756	23
	865	25
	974	27
	1083	29,5
	1192	32
	1301	34,5
	1410	36,2
	1737	44,4

P2 Rated motor power output (...) FK motor rated power output **H** Total head in m Tolerances according to UNI EN ISO 9906:2012

CALPEDA ROMANIA - INFINITY PUMPS SRL
Tel: 0268.33.47.47 / 0722.244.944
vanzari@calpeda.ro | www.calpeda.ro

SDX

Submersible borehole pumps for 6” and 8” wells

The electropumps 6SDX, 6SDXL series comply with the European Regulation no. 547/2012.

Materials

Components	6SDX	6SDXL	8SDX	8SDXL
External jacket Suction lantern	Cr-Ni steel AISI 304	Cr-Ni-Mo steel AISI 316L	Cr-Ni steel AISI 304	Cr-Ni-Mo steel AISI 316
Upper cover	Cr-Ni-Mo steel AISI 316		-	-
Delivery casing	Cr-Ni-Mo steel AISI 316L		Cr-Ni steel AISI 304	Cr-Ni-Mo steel AISI 316
Strainer Valve set	Cr-Ni-Mo steel AISI 316		Cr-Ni-Mo steel AISI 316	
O-ring valve	NBR			
Shaft	Cr-Ni-Mo steel AISI 316		Cr-Ni-Mo steel AISI 329	
Coupling set	Cr-Ni-Mo steel AISI 316/329			
Diffuser Stage casing	Cr-Ni steel AISI 304	Cr-Ni-Mo steel AISI 316L	Cr-Ni steel AISI 304	Cr-Ni-Mo steel AISI 316
Impeller	Cr-Ni steel AISI 304	Cr-Ni-Mo steel AISI 316L	Cr-Ni-Mo steel AISI 316	
Wear ring	Teflon (PTFE)			
Bearing bush	NBR	HNBR	NBR	HNBR
Cable guard Screws	Cr-Ni-Mo steel AISI 316			

CS, CS-R Motor

Components	CS-R 6”, 8”, CS 10” standard	I-CS-R 6”, 8”, I-CS 10” AISI 316
External frame	AISI 304 (AISI 316Ti for 10”)	Cr-Ni-Mo steel AISI 316 Ti
Motor flange	Cast iron GJL 200 EN 1561	Cr-Ni-Mo steel AISI 316
Shaft end	Steel AISI 431 (AISI 329 for 10”)	AISI 316 (AISI 630 from 30 to 93kW) (AISI 429 for 10”)
Thrust bearing	Oscillating pads	Oscillating pads
Bushings	Graphite (Bronze for 8” motor)	Graphite (Bronze for 8” motor)

Construction

Submersible borehole pumps for 6” wells (DN 150 mm) and 8” (DN 200 mm).

6,8SDX: with external jacket and stages in stainless steel AISI 304.

6,8SDXL: with external jacket and stages in stainless steel AISI 316.

Impellers

Radial impellers	Mixed flow impellers
6SDX(L) 18	6SDX(L) 30-46-65 8SDX(L) 78-97

Connection: Screwed connection ISO 228

Delivery casing with built-in non-return valve.

Applications

For water supply.
For civil and industrial applications.
For fire fighting applications.
For irrigation.

Operating conditions

Liquid temperature up to 60 °C (90 °C for SDXL).
Max. sand quantity into the water: 100 g/m^3.
Continuous duty.

Rewindable motor CS series

2-pole induction motor, 50 Hz (n ≈ 2900 rpm).
With water wetted winding in rewindable execution.
Sized for connection to the pumps according to NEMA Standards.
Standard voltages:
- three-phase 400 V; 400/690 V.

Voltage tolerance : +6% / -10%.

In order to limit both current and torque at each starting, for rated motor powers equal to or higher than 7.5 kW, one of the following types of starting is necessary: star/delta, soft starter, stator impedance or autotransformer.

Operating conditions motor

Motor	Max. Liquid temperature	Cooling: minimum flow velocity	Max. starts per hour	Motor P2
4CS	35 °C	0,08 m/s	20	all types
6CS-R	30 °C	0,1 m/s	15	4÷11 kW
		0,2 m/s	15	13÷15 kW
	25 °C	0,2 m/s	15	18,5 kW
		0,2 m/s	13	22÷30 kW
	40 °C	0,1 m/s	13	37 kW
		0,3 m/s	6	45 kW
8CS-R	25 °C	0,3 m/s	10	30÷45 kW
			8	51÷75 kW
			6	92 kW
10CS	25 °C	0,50 m/s	10	all types

Insulation class F for 4” motors, class E for 6-8” motors, PVC coated wire for 10” motors.
Motor suitable operation with frequency converter.
Protection IP 68.

Special features on request

- Other voltages.
- 60 Hz frequency.
- Other temperatures.
- Encapsulated motor **FK series**.

Designation

6 SDX L 30 / 17

- Ø of the well in inches
- Series
- Cr-Ni-Mo steel AISI 316 construction
- Stage identification
- Number of stages

CALPEDA ROMANIA - INFINITY PUMPS SRL
Tel: 0268.33.47.47 / 0722.244.944
vanzari@calpeda.ro | www.calpeda.ro

SDX

Submersible borehole pumps for 6” and 8” wells

Coverage chart n ≈ 2900 rpm

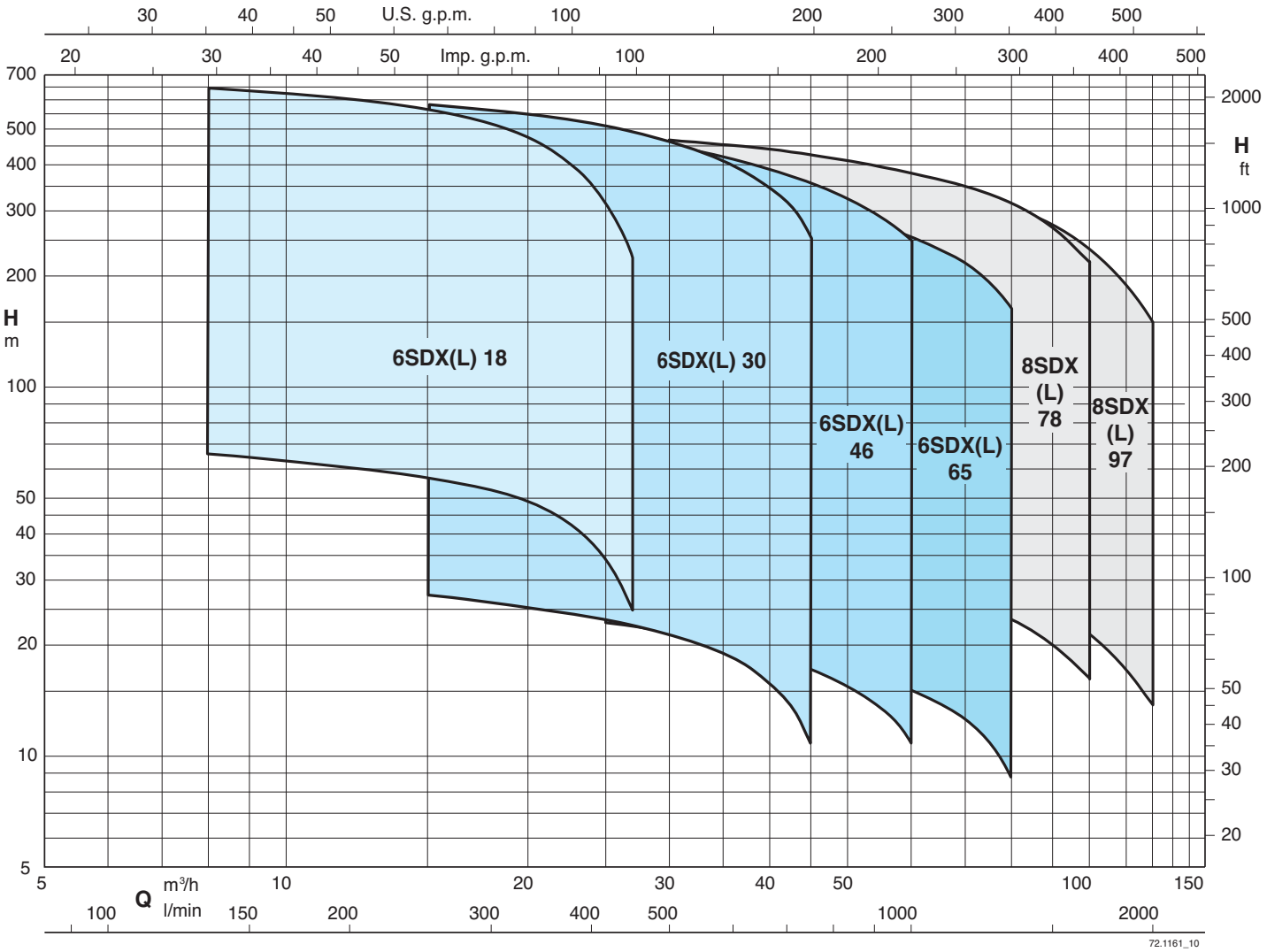

CALPEDA ROMANIA - INFINITY PUMPS SRL
Tel: 0268.33.47.47 / 0722.244.944
vanzari@calpeda.ro | www.calpeda.ro

6SDX 18

Submersible borehole pumps for 6” wells

Characteristic curves

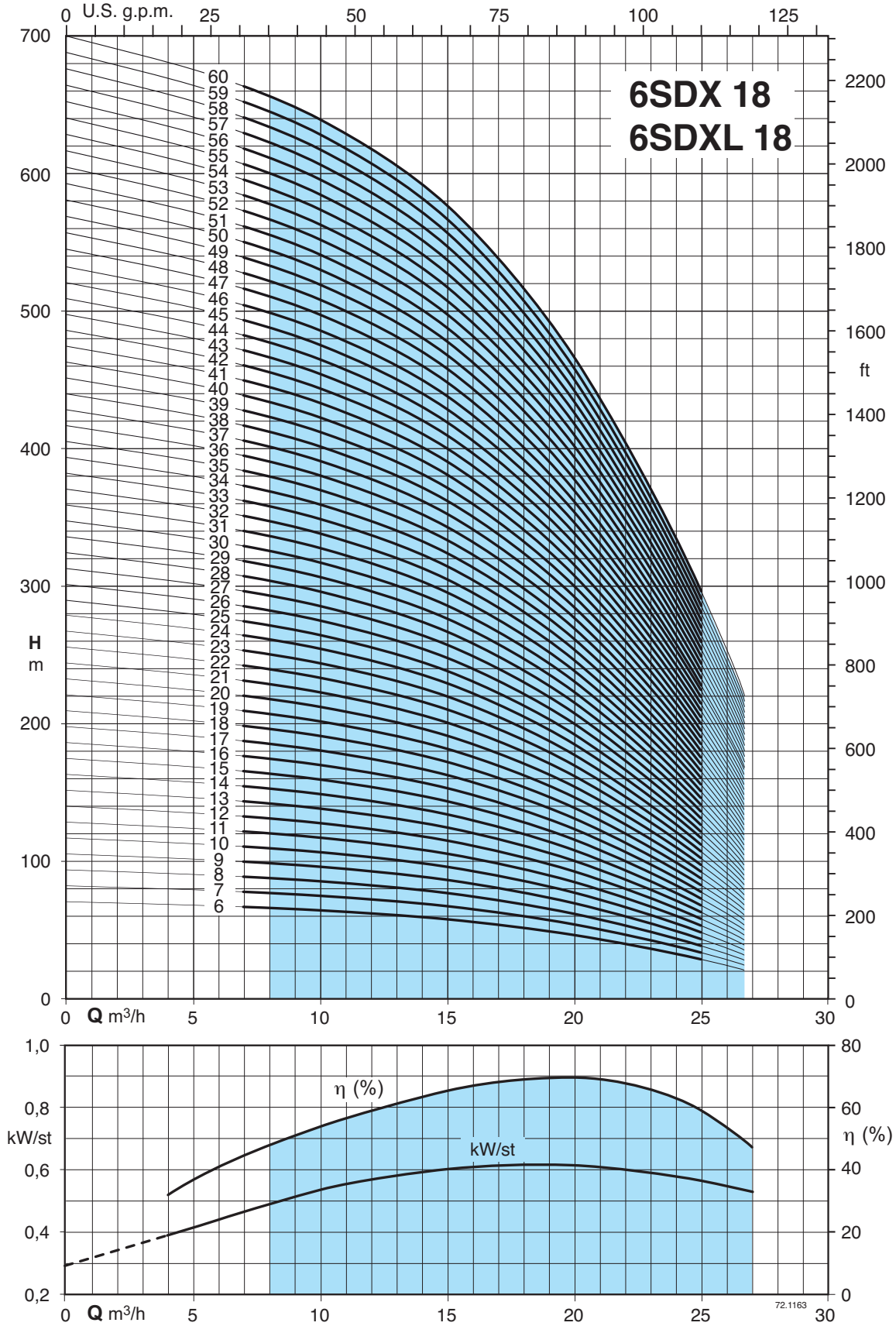

CALPEDA ROMANIA - INFINITY PUMPS SRL
Tel: 0268.33.47.47 / 0722.244.944
vanzari@calpeda.ro | www.calpeda.ro

6SDX 18

Submersible borehole pumps for 6” wells

Performance n ≈ 2900 rpm, dimensions and weights

3 ~	P2		Q	n ≈ 2900 rpm									DN	Motore		f	
			m³/h	0	8	10	12	15	18	21	24	27		CS-R	FK		
	kW	HP	l/min	0	133	167	200	250	300	350	400	450		mm	mm	mm	kg
6SDX (L) 18/6	4	5,5		70	66,4	64	62	57,6	51,6	43,2	32,9	20,5				494	12,5
6SDX (L) 18/7	5,5	7,5		81,7	77,5	74,7	72,3	67,2	60,2	50,4	38,4	23,9				532	13,5
6SDX (L) 18/8	5,5	7,5		93,3	88,5	85,3	82,7	76,8	68,8	57,6	43,9	27,4				569	14,3
6SDX (L) 18/9	5,5	7,5		105	99,6	96	93	86,4	77,4	64,8	49,4	30,8				607	15
6SDX (L) 18/10	7,5	10		117	111	107	103	96	86	72,0	54,9	34,2				644	16
6SDX (L) 18/11	7,5	10		128	122	117	114	106	94,6	79,2	60,4	37,6				682	17
6SDX (L) 18/12	7,5	10		140	133	128	124	115	103	86,4	65,8	41,0				719	17,5
6SDX (L) 18/13	9,2	12,5		152	144	139	134	125	112	93,6	71,3	44,5				757	18,5
6SDX (L) 18/14	9,2	12,5		163	155	149	145	134	120	101	76,8	47,9				794	19,3
6SDX (L) 18/15	9,2	12,5		175	166	160	155	144	129	108	82,3	51,3				832	20
6SDX (L) 18/16	11	15		187	177	171	165	154	138	115	87,8	54,7				869	21
6SDX (L) 18/17	11	15		198	188	181	176	163	146	122	93,3	58,1				907	22
6SDX (L) 18/18	11	15		210	199	192	186	173	155	130	98,8	61,6				944	22,5
6SDX (L) 18/19	13 (15)	17,5 (20)		222	210	203	196	182	163	137	104	65,0				982	23,5
6SDX (L) 18/20	13 (15)	17,5 (20)		233	221	213	207	192	172	144	110	68,4				1019	24
6SDX (L) 18/21	13 (15)	17,5 (20)		245	232	224	217	202	181	151	115	71,8				1057	25
6SDX (L) 18/22	15	20		257	243	235	227	211	189	158	121	75,2				1094	26
6SDX (L) 18/23	15	20		268	254	245	238	221	198	166	126	78,7				1132	26,5
6SDX (L) 18/24	15	20		280	266	256	248	230	206	173	132	82,1				1169	27,5
6SDX (L) 18/25	18,5	25		292	277	267	258	240	215	180	137	85,5				1207	28,3
6SDX (L) 18/26	18,5	25		303	288	277	269	250	224	187	143	88,9				1244	29
6SDX (L) 18/27	18,5	25		315	299	288	279	259	232	194	148	92,3				1282	31
6SDX (L) 18/28	18,5	25		327	310	299	289	269	241	202	154	95,8				1319	31
6SDX (L) 18/29	18,5	25		338	321	309	300	278	249	209	159	99,2				1356	31,5
6SDX (L) 18/30	18,5	25		350	332	320	310	288	258	216	165	103				1394	32,5
6SDX (L) 18/31	22	30		362	343	331	320	298	267	223	170	106	Rp	145	137	1431	33,3
6SDX (L) 18/32	22	30		373	354	342	331	307	275	230	176	109	2”1/2	6"	6"	1469	34
6SDX (L) 18/33	22	30	**H**	385	365	352	341	317	284	238	181	113				1506	35
6SDX (L) 18/34	22	30	m	397	376	363	351	326	292	245	187	116				1544	35,7
6SDX (L) 18/35	22	30		408	387	373	362	336	301	252	192	120				1581	36,3
6SDX (L) 18/36	22	30		420	398	384	372	346	310	259	198	123				1619	37
6SDX (L) 18/37	26 (30)	35 (40)		432	409	395	382	355	318	266	203	127				1656	38,4
6SDX (L) 18/38	26 (30)	35 (40)		443	420	405	393	365	327	274	209	130				1694	39,8
6SDX (L) 18/39	26 (30)	35 (40)		455	432	416	403	374	335	281	214	133				1731	40
6SDX (L) 18/40	26 (30)	35 (40)		467	443	427	413	384	344	288	220	137				1769	40,5
6SDX (L) 18/41	26 (30)	35 (40)		478	454	437	424	394	353	295	225	140				1806	41,8
6SDX (L) 18/42	26 (30)	35 (40)		490	465	448	434	403	361	302	230	144				1844	43
6SDX (L) 18/43	30	40		502	476	459	444	413	370	310	236	147				1881	44
6SDX (L) 18/44	30	40		513	487	469	455	422	378	317	241	151				1919	45
6SDX (L) 18/45	30	40		525	498	480	465	432	387	324	247	154				1956	46
6SDX (L) 18/46	30	40		537	509	491	475	442	396	331	252	157				1993	47
6SDX (L) 18/47	30	40		548	520	501	486	451	404	338	258	161				2031	47,5
6SDX (L) 18/48	30	40		560	531	512	496	461	413	346	263	164				2068	48
6SDX (L) 18/49	30	40		572	542	523	506	470	421	353	269	168				2106	50
6SDX (L) 18/50	37	50		583	553	533	517	480	430	360	274	171				2143	51
6SDX (L) 18/51	37	50		595	564	544	527	490	439	367	280	174				2181	52
6SDX (L) 18/52	37	50		607	575	555	537	499	447	374	285	178				2218	53
6SDX (L) 18/53	37	50		618	586	565	548	509	456	382	291	181				2256	54
6SDX (L) 18/54	37	50		630	598	576	558	518	464	389	296	185				2293	55
6SDX (L) 18/55	37	50		642	609	587	568	528	473	396	302	188				2331	56
6SDX (L) 18/56	37	50		653	620	597	579	538	482	403	307	192				2368	57
6SDX (L) 18/57	37	50		665	631	608	589	547	490	410	313	195				2406	58
6SDX (L) 18/58	37	50		677	642	619	599	557	499	418	318	198				2443	59
6SDX (L) 18/59	37	50		688	653	629	610	566	507	425	324	202				2481	60
6SDX (L) 18/60	37	50		700	664	640	620	576	516	432	329	205				2518	61

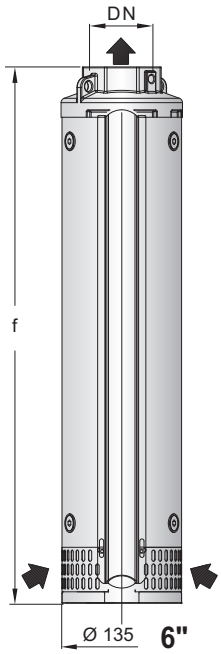

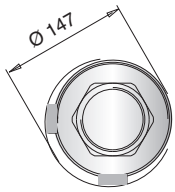

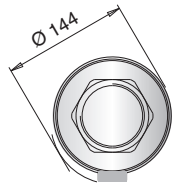

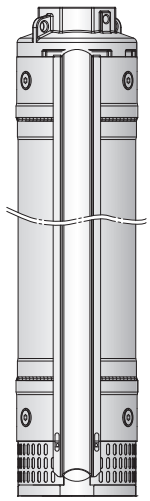

Reinforced with special collar from 6SDX(L) 18/47

P2 Rated motor power output (...) FK motor rated power output **H** Total head in m Tolerances according to UNI EN ISO 9906:2012

CALPEDA ROMANIA - INFINITY PUMPS SRL
Tel: 0268.33.47.47 / 0722.244.944
vanzari@calpeda.ro | www.calpeda.ro

6SDX 30

Submersible borehole pumps for 6” wells

Characteristic curves

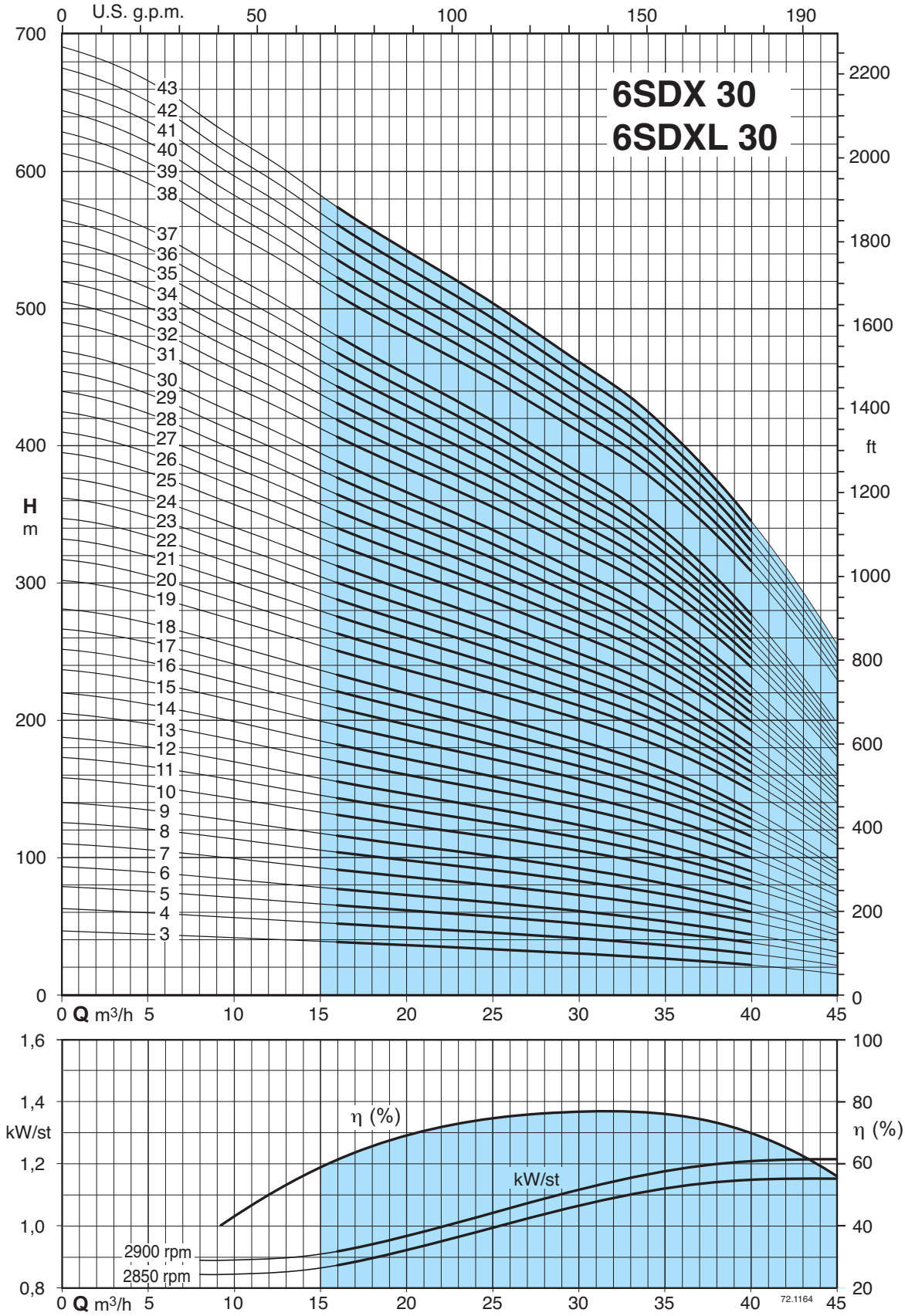

CALPEDA ROMANIA - INFINITY PUMPS SRL
Tel: 0268.33.47.47 / 0722.244.944
vanzari@calpeda.ro | www.calpeda.ro

6SDX 30

Submersible borehole pumps for 6” wells

Performance n ≈ 2900 rpm, dimensions and weights

3 ~	P2		Q	n ≈ 2900 rpm								
			m³/h	0	15	20	25	30	35	40	45	-
	kW	HP	l/min	0	250	333	416	500	583	666	750	-
6SDX (L) 30/3	4	5,5	H m	46,3	38,9	36	33,3	30,2	26,7	21,7	15,3	-
6SDX (L) 30/4	5,5	7,5		62,5	52,6	48,8	45,2	41,1	36,5	30	21,4	
6SDX (L) 30/5	7,5	10		78,6	66,2	61,5	56,9	51,8	46,1	38	27,4	
6SDX (L) 30/6	7,5	10		93,1	78,4	72,6	67,1	61	54	44,1	31,2	
6SDX (L) 30/7	9,2	12,5		110	92,6	86	79,7	72,6	64,6	53,3	38,4	
6SDX (L) 30/8	11	15		125	106	98,1	90,9	82,7	73,6	60,5	43,5	
6SDX (L) 30/9	11	15		140	118	109	101	91,8	81,4	66,6	47,3	
6SDX (L) 30/10	13 (15)	17,5 (20)		158	133	124	115	105	93,5	77,3	56,1	
6SDX (L) 30/11	15	20		173	146	135	125	114	102	83,8	60,4	
6SDX (L) 30/12	15	20		188	158	147	136	123	110	90	64,4	
6SDX (L) 30/13	18,5	25		205	173	161	149	136	121	100	72,4	
6SDX (L) 30/14	18,5	25		220	185	172	159	145	129	106	76,7	
6SDX (L) 30/15	22	30		237	200	185	172	157	140	116	84	
6SDX (L) 30/16	22	30		252	212	197	183	166	148	122	88,3	
6SDX (L) 30/17	22	30		267	224	208	193	176	156	129	92,5	
6SDX (L) 30/18	22	30		281	237	220	203	185	164	135	96,5	
6SDX (L) 30/19	26 (30)	35 (40)		302	255	237	220	201	180	149	109	
6SDX (L) 30/20	26 (30)	35 (40)		317	267	249	231	210	188	156	114	
6SDX (L) 30/21	26 (30)	35 (40)		332	280	260	241	220	197	163	118	
6SDX (L) 30/22	30	40		347	293	272	252	230	205	169	123	
6SDX (L) 30/23	30	40		362	305	283	263	239	213	176	127	
6SDX (L) 30/24	30	40		377	317	295	273	249	221	182	131	
6SDX (L) 30/25	37	50		395	333	309	287	261	233	193	140	
6SDX (L) 30/26	37	50		410	345	321	297	271	242	200	144	
6SDX (L) 30/27	37	50		425	358	332	308	280	250	206	149	
6SDX (L) 30/28	37	50		440	370	344	318	290	258	212	153	
6SDX (L) 30/29	37	50		454	383	355	329	299	266	219	157	
6SDX (L) 30/30	37	50		469	395	366	339	308	274	225	161	
6SDX (L) 30/31	45	60		490	413	384	356	324	289	239	174	
6SDX (L) 30/32	45	60		505	425	395	366	334	298	246	178	
6SDX (L) 30/33	45	60		520	438	407	377	343	306	252	182	
6SDX (L) 30/34	45	60		535	450	418	387	353	314	259	186	
6SDX (L) 30/35	45	60		549	463	429	398	362	322	265	190	
6SDX (L) 30/36	45	60		564	475	441	408	371	330	271	194	
6SDX (L) 30/37	45	60		579	487	452	418	380	338	277	198	
6SDX (L) 30/38	51 (55)	70 (75)		613	517	482	448	410	369	309	229	
6SDX (L) 30/39	51 (55)	70 (75)		628	530	494	459	420	378	316	234	
6SDX (L) 30/40	51 (55)	70 (75)		644	543	506	471	430	387	323	240	
6SDX (L) 30/41	51 (55)	70 (75)		659	557	518	482	440	396	330	245	
6SDX (L) 30/42	55	75		675	569	530	493	450	404	338	250	
6SDX (L) 30/43	55	75		690	582	542	504	460	413	345	255	

DN	Motore CS-R mm	Motore FK mm	f mm	kg
Rp 3”	145 6"	137 6"	620	14,7
			705	16,8
			790	18,9
			876	21
			961,5	23,1
			1047	25,4
			1132	27,3
			1218	29,4
			1303	31,5
			1389	33,6
			1474	35,7
			1560	37,8
			1645	39,9
			1730	42
			1816	44,1
			1901	46,1
			1987	48,2
			2072	50,3
			2157	52,4
			2243	54,5
			2328	56,6
			2414	58,7
			2499	60,8
			2584	62,9
			2670	65
			2755	67,2
			2840	69,2
			2926	71,3
			3011	75,2
			3096	78,3
			3182	80,4
			3267	82,5
			3352	84,6
			3438	87,9
			3523	90
	191 8"	196 8"	3709	92,3
			3794	94,5
			3879	96,6
			3965	97,6
			4050	98,7
			4135	99,8

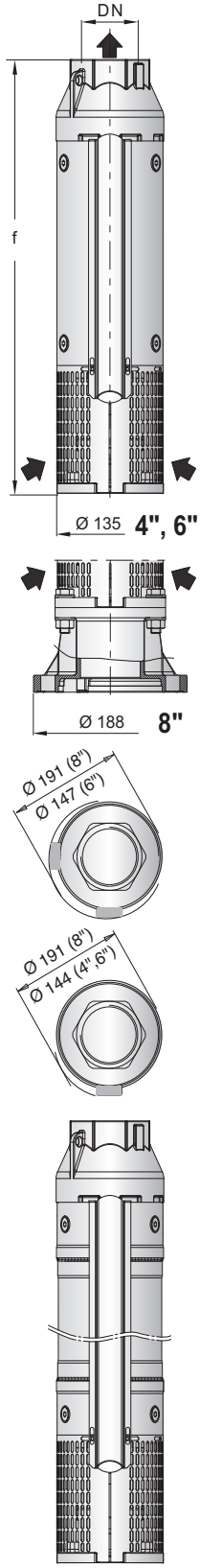

Reinforced with special collar from 6SDX(L) 30/36

P2 Rated motor power output (...) FK motor rated power output **H** Total head in m Tolerances according to UNI EN ISO 9906:2012

CALPEDA ROMANIA - INFINITY PUMPS SRL
Tel: 0268.33.47.47 / 0722.244.944
vanzari@calpeda.ro | www.calpeda.ro

6SDX 46

Submersible borehole pumps for 6” wells

Characteristic curves

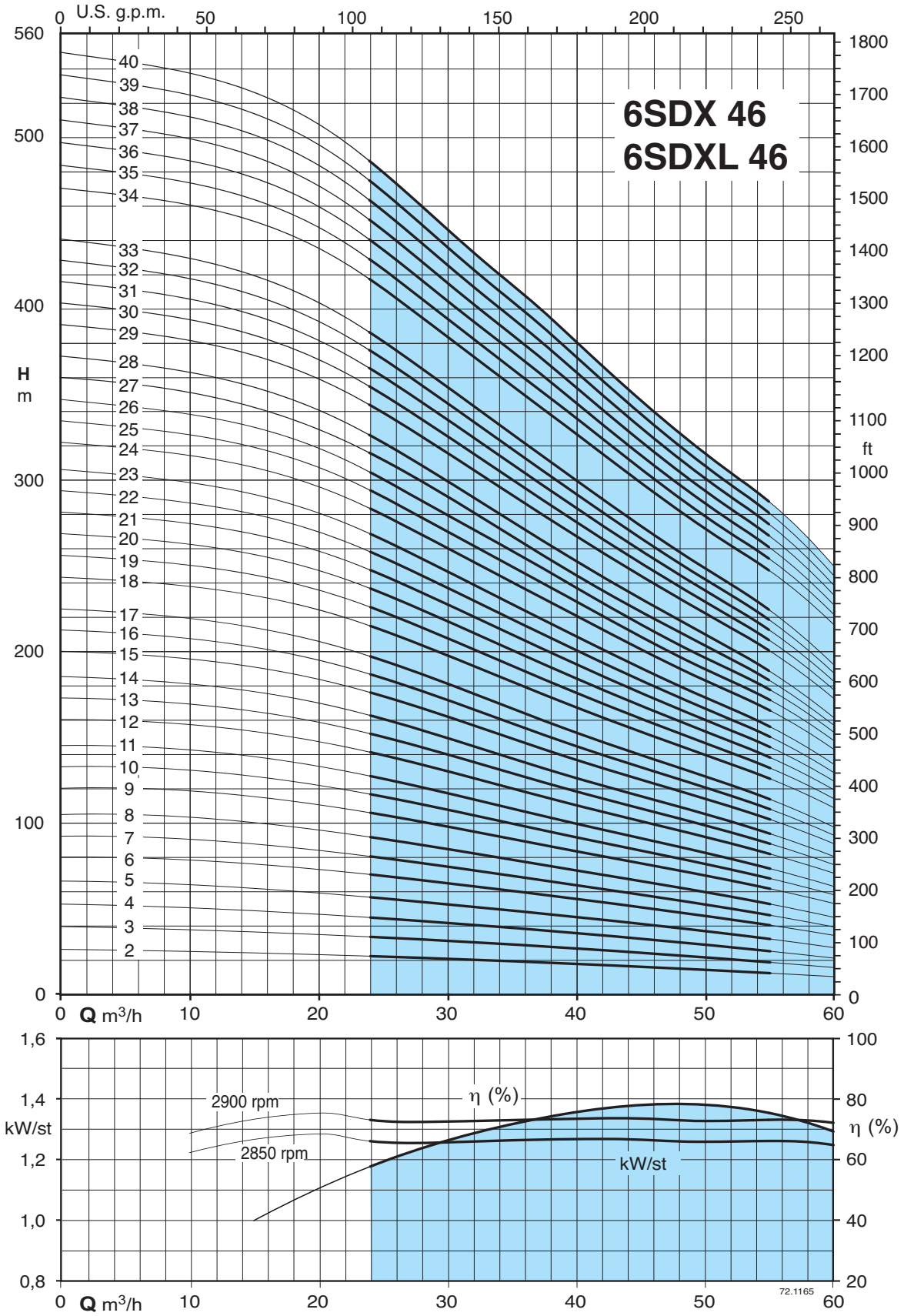

CALPEDA ROMANIA - INFINITY PUMPS SRL
Tel: 0268.33.47.47 / 0722.244.944
vanzari@calpeda.ro | www.calpeda.ro

6SDX 46

Submersible borehole pumps for 6” wells

Performance n ≈ 2900 rpm, dimensions and weights

3 ~	P2		Q	n ≈ 2900 rpm											DN	Motore		f	
			m³/h	0	25	30	35	40	45	50	55	60	-	-		CS-R	FK		
	kW	HP	l/min	0	416	500	583	666	750	833	916	1000	-	-		mm	mm	mm	kg
6SDX (L) 46/2	3	4		26,4	22,6	20,9	19,3	17,8	16,6	15,1	13,4	11,3	-	-		96 - 4"	96 - 4"	594	13,5
6SDX (L) 46/3	4	5,5		39,4	33,8	31,2	28,8	26,6	24,7	22,5	19,9	16,8						705	16,2
6SDX (L) 46/4	5,5	7,5		52,5	45	41,5	38,3	35,5	32,9	29,9	26,5	22,3						819	18,8
6SDX (L) 46/5	7,5	10		66,1	56,8	52,3	48,3	44,7	41,5	37,8	33,6	28,4						933	21,4
6SDX (L) 46/6	9,2	12,5		80,7	70	65,2	60,4	55,5	50,3	46	41,6	35,7						1047	24,0
6SDX (L) 46/7	9,2	12,5		93,1	80,4	74,8	69,3	63,5	57,6	52,7	47,5	40,5						1161	26,6
6SDX (L) 46/8	11	15		106	91,6	85,1	78,9	72,2	65,5	59,9	54	46						1275	29,2
6SDX (L) 46/9	13 (15)	17,5 (20)		121	105	98,2	91	83,7	75,9	69,5	62,9	54,1						1389	31,8
6SDX (L) 46/10	13 (15)	17,5 (20)		134	116	108	100	91,9	83,3	76,2	68,9	59						1503	34,4
6SDX (L) 46/11	15	20		146	126	118	109	99,9	90,5	82,8	74,7	63,7						1617	37,0
6SDX (L) 46/12	18,5	25		161	140	130	120	111	101	92	83,3	71,4						1730	39,6
6SDX (L) 46/13	18,5	25		174	150	140	130	119	108	98,7	89,2	76,3						1844	42,2
6SDX (L) 46/14	18,5	25		186	161	149	139	127	115	105	95	81						1958	44,8
6SDX (L) 46/15	22	30		201	174	162	150	138	125	114	103	88,4						2072	47,4
6SDX (L) 46/16	22	30		213	184	171	159	146	132	121	109	93,2				145 6"	137 6"	2186	50,1
6SDX (L) 46/17	22	30		225	195	181	168	154	139	127	115	97,8						2300	52,7
6SDX (L) 46/18	26 (30)	35 (40)		244	212	198	183	169	153	140	127	109						2414	55,3
6SDX (L) 46/19	26 (30)	35 (40)	**H**	257	223	208	192	177	160	147	133	114						2527	57,9
6SDX (L) 46/20	30	40	m	269	234	218	208	185	168	154	139	119			Rp 3”			2641	60,5
6SDX (L) 46/21	30	40		282	244	227	211	193	175	160	145	124						2755	63,1
6SDX (L) 46/22	30	40		294	255	237	220	202	183	167	151	129						2869	65,7
6SDX (L) 46/23	30	40		307	265	247	229	209	190	174	157	134						2983	68,3
6SDX (L) 46/24	37	50		322	280	260	241	222	201	184	166	143						3096	70,9
6SDX (L) 46/25	37	50		335	290	270	250	230	208	191	172	147						3210	73,5
6SDX (L) 46/26	37	50		347	301	280	259	238	216	197	178	152						3324	76,1
6SDX (L) 46/27	37	50		360	311	289	268	246	223	204	184	157						3438	79,3
6SDX (L) 46/28	37	50		372	321	299	277	254	230	210	190	162						3552	82,0
6SDX (L) 46/29	45	60		390	339	315	292	268	243	223	201	173						3665	87,4
6SDX (L) 46/30	45	60		403	349	325	301	276	251	229	207	178						3779	90,0
6SDX (L) 46/31	45	60		415	360	334	310	284	258	236	213	183						3893	92,6
6SDX (L) 46/32	45	60		427	370	344	319	292	265	243	219	187						4007	95,2
6SDX (L) 46/33	45	60		440	380	353	328	300	272	249	225	192						4121	97,8
6SDX (L) 46/34	51 (55)	70 (75)		469	411	383	355	328	298	272	248	216						4335	101
6SDX (L) 46/35	51 (55)	70 (75)		482	422	394	365	337	306	279	255	221						4449	103
6SDX (L) 46/36	51 (55)	70 (75)		496	434	404	374	346	314	287	261	227						4562	106
6SDX (L) 46/37	51 (55)	70 (75)		509	445	415	384	355	322	294	268	233				191 8"	196 8"	4676	109
6SDX (L) 46/38	55	75		522	456	425	394	364	330	302	275	238						4790	111
6SDX (L) 46/39	55	75		535	467	436	403	372	338	309	281	244						4904	114
6SDX (L) 46/40	55	75		548	479	446	413	381	346	316	288	249						5018	117

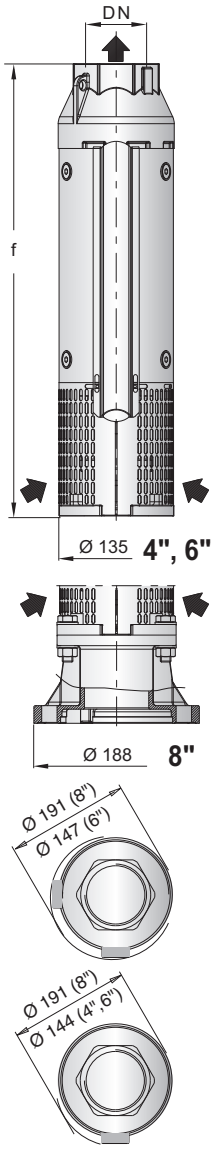

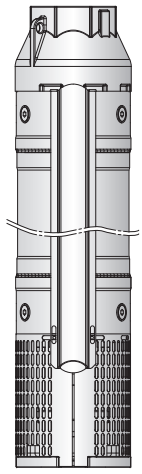

Reinforced with special collar from 6SDX(L) 46/27

P2 Rated motor power output (...) FK motor rated power output **H** Total head in m Tolerances according to UNI EN ISO 9906:2012

CALPEDA ROMANIA - INFINITY PUMPS SRL
Tel: 0268.33.47.47 / 0722.244.944
vanzari@calpeda.ro | www.calpeda.ro

6SDX 65

Submersible borehole pumps for 6” wells

Characteristic curves

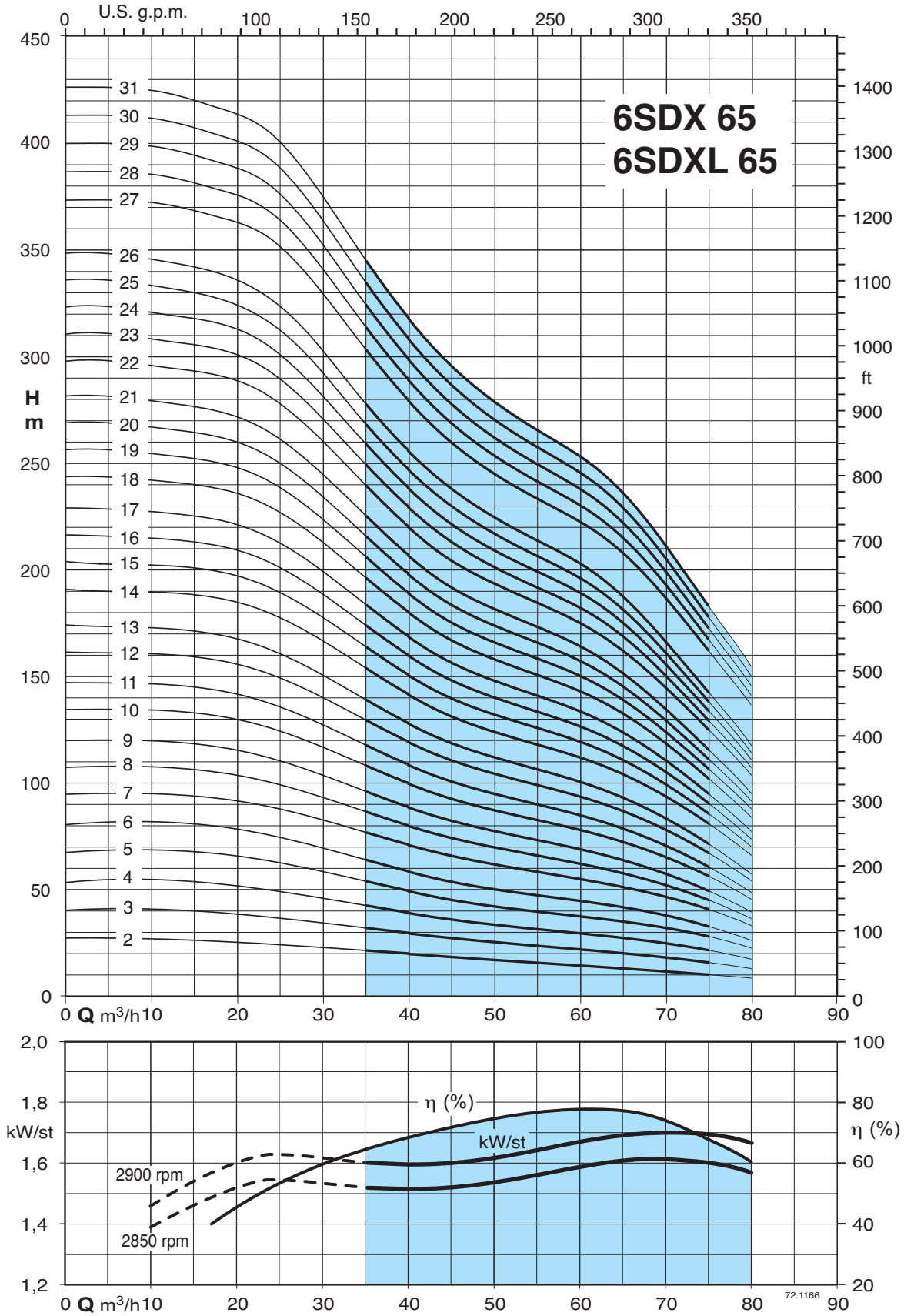

CALPEDA ROMANIA - INFINITY PUMPS SRL
Tel: 0268.33.47.47 / 0722.244.944
vanzari@calpeda.ro | www.calpeda.ro

6SDX 65

Submersible borehole pumps for 6” wells

Performance n ≈ 2900 rpm, dimensions and weights

3 ~	P2		Q	n ≈ 2900 rpm											DN	Motore		f	
			m³/h	0	35	40	45	50	55	60	65	70	75	80		CS-R	FK		
	kW	HP	l/min	0	583	666	750	833	916	1000	1083	1166	1250	1333		mm	mm	mm	kg
6SDX (L) 65/2	4	5,5		26,8	21,1	19	17,3	16,5	15,7	14,9	13,9	12,4	10,5	8,2				592	13,6
6SDX (L) 65/3	5,5	7,5		40,4	31,8	28,8	26,2	24,9	23,7	22,5	21	18,9	16	12,6				705	16,2
6SDX (L) 65/4	7,5	10		54	42,5	38,4	35	33,2	31,6	30,1	28	25,2	21,4	16,9				819	18,8
6SDX (L) 65/5	9,2	12,5		68	53,8	48,7	44,3	41,9	40,1	38,2	35,6	32,2	27,5	22				933	21,4
6SDX (L) 65/6	11	15		81,2	64	57,9	52,7	50	47,7	45,3	42,3	38,1	32,3	25,7				1047	24,0
6SDX (L) 65/7	13 (15)	17,5 (20)		94,9	76,2	70,1	65,2	61,7	58,6	55,7	52,1	46,1	39,7	33,4				1161	26,7
6SDX (L) 65/8	15	20		108	86	79,1	73,5	69,7	66,1	62,8	58,5	51,6	44,3	37				1275	29,3
6SDX (L) 65/9	15	20		120	95,5	87,8	81,5	77,4	73,4	69,6	64,6	56,8	48,6	40,2				1389	31,9
6SDX (L) 65/10	18,5	25		134	108	99	91,9	87,2	82,7	78,5	73,2	64,6	55,5	46,3				1503	34,5
6SDX (L) 65/11	18,5	25		147	117	108	100	95	90	85,4	79,4	69,8	59,9	49,6				1617	37,1
6SDX (L) 65/12	22	30		161	129	118	110	104	99,1	94,1	87,6	77,3	66,3	55,3		145	137	1730	39,7
6SDX (L) 65/13	22	30		174	138	127	118	112	106	101	93,8	82,5	70,8	58,6		6"	6"	1844	42,4
6SDX (L) 65/14	26 (30)	35 (40)		190	153	141	131	124	118	112	105	93	80,2	67,7				1958	44,9
6SDX (L) 65/15	26 (30)	35 (40)	**H**	203	163	150	140	132	126	119	111	98,7	85	71,5				2072	47,5
6SDX (L) 65/16	30	40	m	216	173	159	148	140	133	126	118	104	89,7	75,2				2186	50,2
6SDX (L) 65/17	30	40		229	183	168	156	148	141	133	124	110	94,3	78,8				2300	52,8
6SDX (L) 65/18	37	50		243	195	180	167	158	150	143	133	118	101	85,2				2414	55,4
6SDX (L) 65/19	37	50		256	205	189	175	166	158	150	140	123	106	88,9	Rp			2527	58,0
6SDX (L) 65/20	37	50		269	215	198	184	174	165	157	146	129	111	92,4	3"			2641	60,7
6SDX (L) 65/21	37	50		281	225	206	192	182	173	164	152	134	115	95,7				2755	63,3
6SDX (L) 65/22	45	60		298	239	220	204	194	184	175	163	144	124	104				2869	68,7
6SDX (L) 65/23	45	60		310	249	229	213	202	191	182	170	150	129	108				2983	71,3
6SDX (L) 65/24	45	60		323	259	238	221	209	199	189	176	155	133	111				3096	73,9
6SDX (L) 65/25	45	60		336	268	247	229	217	206	196	182	161	138	115				3210	76,5
6SDX (L) 65/26	45	60		348	278	255	237	225	213	202	188	166	142	118				3324	79,1
6SDX (L) 65/27	51 (55)	70 (75)		373	303	279	259	245	233	222	208	186	162	137				3538	82,6
6SDX (L) 65/28	51 (55)	70 (75)		386	313	288	268	253	241	229	216	193	167	142		191	196	3652	85,3
6SDX (L) 65/29	51 (55)	70 (75)		399	324	298	277	262	249	237	223	199	172	146		8"	8"	3765	87,9
6SDX (L) 65/30	55	75		413	334	308	286	270	258	245	230	205	177	151				3879	90,5
6SDX (L) 65/31	55	75		426	345	317	295	279	265	252	237	211	183	155				3993	93,2

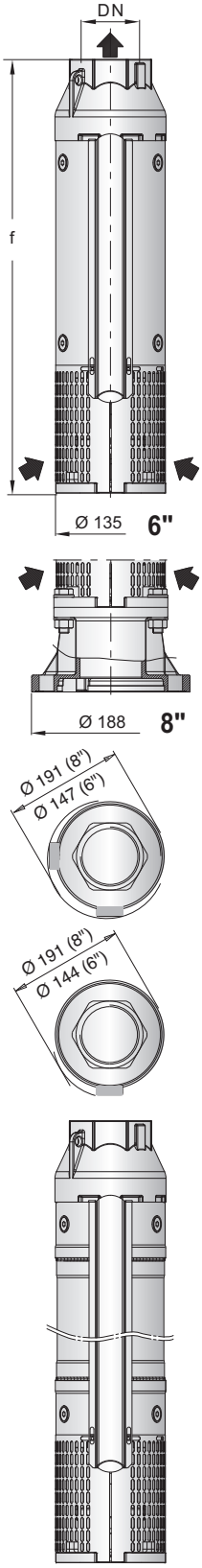

Reinforced with special collar from 6SDX(L) 65/27

P2 Rated motor power output (...) FK motor rated power output **H** Total head in m Tolerances according to UNI EN ISO 9906:2012

CALPEDA ROMANIA - INFINITY PUMPS SRL
Tel: 0268.33.47.47 / 0722.244.944
vanzari@calpeda.ro | www.calpeda.ro

8SDX 78

Submersible borehole pumps for 8” wells

Characteristic curves, performance n ≈ 2900 rpm, dimensions and weights

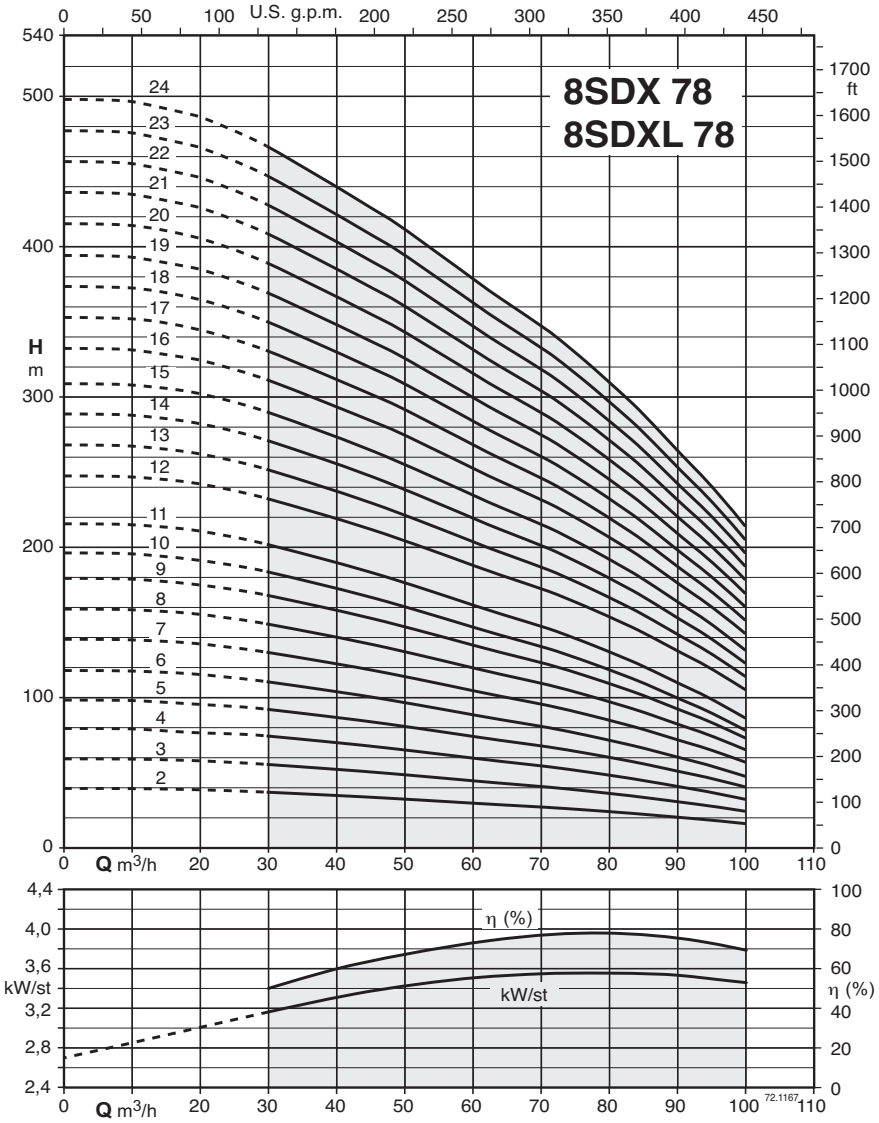

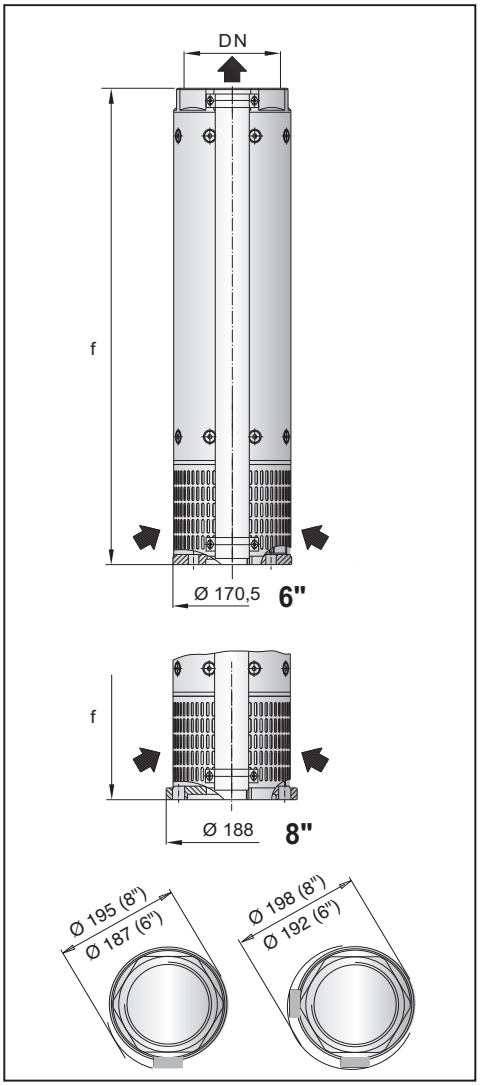

3 ~	P2		Q	n ≈ 2900 rpm								
			m³/h	0	30	40	50	60	70	80	90	100
	kW	HP	l/min	0	500	666	833	1000	1166	1333	1500	1666
8SDX 78/2 - 8SDXL 78/2	7,5	10	H m	39,9	37,1	34,9	32,6	29,7	27,1	24,3	20,4	16,3
8SDX 78/3 - 8SDXL 78/3	11	15		59,8	55,7	52,3	48,9	44,6	40,7	36,4	30,6	24,4
8SDX 78/4 - 8SDXL 78/4	15	20		79,7	74,3	69,7	65,1	59,4	54,3	48,6	40,9	32,6
8SDX 78/5 - 8SDXL 78/5	18,5	25		99,6	92,9	87,1	81,4	74,3	67,9	60,7	51,1	40,7
8SDX 78/6 - 8SDXL 78/6	22	30		120	111	105	97,7	89,1	81,4	72,9	61,3	48,9
8SDX 78/7 - 8SDXL 78/7	26 (30)	35 (40)		140	130	122	114	104	95	85	71,5	57
8SDX 78/8 - 8SDXL 78/8	30	40		156	146	138	128	117	107	94,5	80	63,3
8SDX 78/9 - 8SDXL 78/9	37	50		176	164	155	144	132	120	106	90	71,2
8SDX 78/10 - 8SDXL 78/10	37	50		195	183	173	160	147	134	118	100	79,1
8SDX 78/11 - 8SDXL 78/11	45	60		215	201	190	176	162	147	130	110	87
8SDX 78/12 - 8SDXL 78/12	45	60		248	232	218	203	187	171	154	130	105
8SDX 78/13 - 8SDXL 78/13	51 (55)	70 (75)		268	251	237	220	203	185	166	141	114
8SDX 78/14 - 8SDXL 78/14	51 (55)	70 (75)		289	271	255	237	218	200	179	152	122
8SDX 78/15 - 8SDXL 78/15	55	75		310	290	273	254	234	214	192	163	131
8SDX 78/16 - 8SDXL 78/16	59 (75)	80 (100)		332	312	293	274	252	232	206	176	143
8SDX 78/17 - 8SDXL 78/17	66 (75)	90 (100)		353	332	311	292	268	247	219	187	152
8SDX 78/18 - 8SDXL 78/18	66 (75)	90 (100)		374	351	329	309	284	261	232	198	161
8SDX 78/19 - 8SDXL 78/19	75	100		394	371	348	326	299	276	245	209	170
8SDX 78/20 - 8SDXL 78/20	75	100		415	390	366	343	315	290	258	220	179
8SDX 78/21 - 8SDXL 78/21	75	100		436	409	385	361	331	304	271	231	187
8SDX 78/22 - 8SDXL 78/22	92	125		457	428	403	378	347	318	284	242	196
8SDX 78/23 - 8SDXL 78/23	92	125		478	448	422	395	363	333	297	253	205
8SDX 78/24 - 8SDXL 78/24	92	125		499	467	440	412	379	347	310	264	214

DN	Motor CS-R mm	Motor FK mm	f mm	8SDXL kg
Rp 5”	145 6"	137 6"	644	31,5
			770	36,5
			896	41,5
			1022	46,5
			1148	51
			1274	56
			1400	61
			1526	66
			1652	71
			1778	76
			1909	82
	191 8"	196 8"	2035	87
			2161	92
			2287	97
			2413	101,5
			2539	106,5
			2665	111,5
			2791	116,5
			2917	121
			3043	126
			3169	131
			3295	136
			3421	141

P_2 Rated motor power output (...) FK motor rated power output **H** Total head in m Tolerances according to UNI EN ISO 9906:2012

CALPEDA ROMANIA - INFINITY PUMPS SRL
Tel: 0268.33.47.47 / 0722.244.944
vanzari@calpeda.ro | www.calpeda.ro

8SDX 97

Submersible borehole pumps for 8” wells

Characteristic curves, performance n ≈ 2900 rpm, dimensions and weights

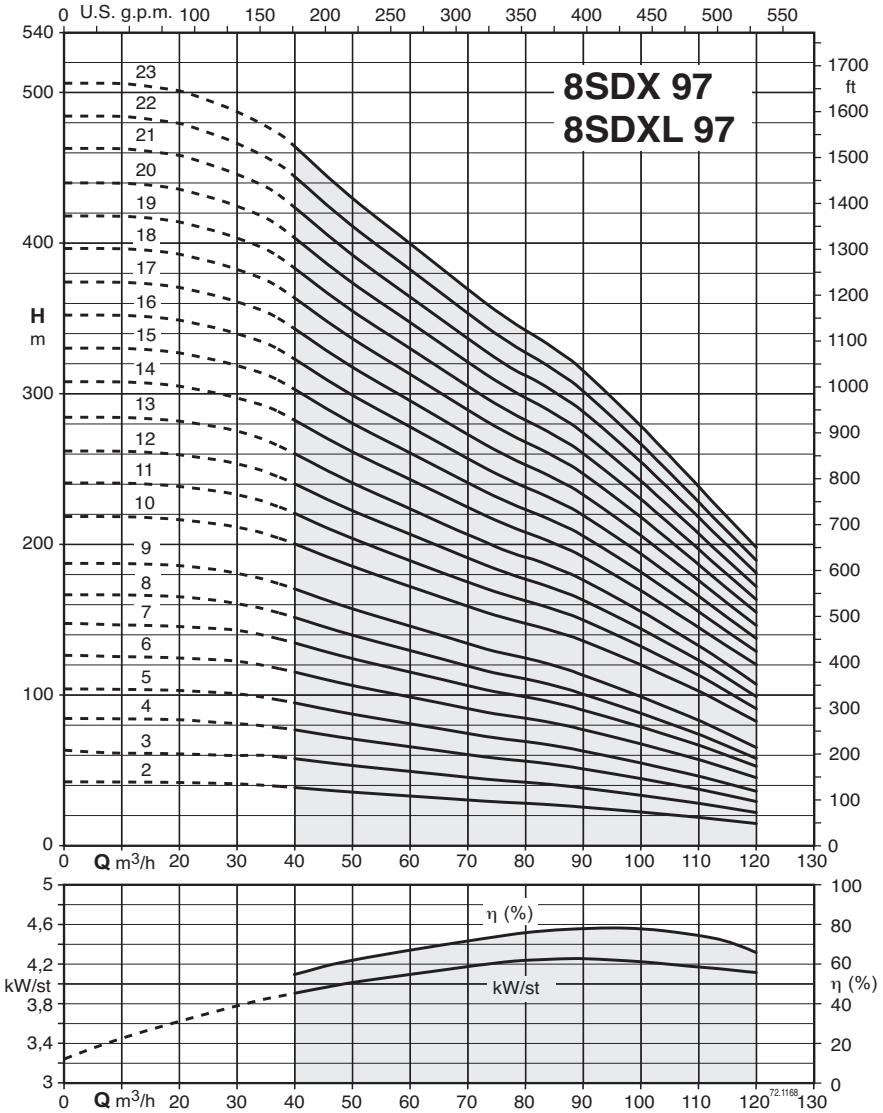

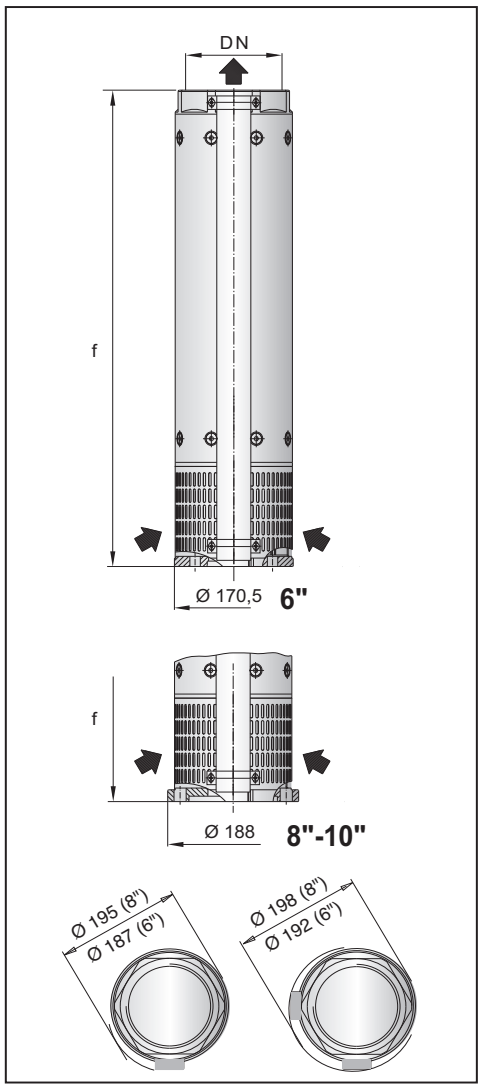

3 ~	P2		Q	n ≈ 2900 rpm									
			m³/h	0	40	50	60	70	80	90	100	110	120
	kW	HP	l/min	0	666	833	1000	1166	1333	1500	1666	1833	2000
8SDX 97/2 - 8SDXL 97/2	9,2	12,5	H m	41,2	38,6	35,2	32,2	29,8	27,8	24,8	21,8	18,6	14,8
8SDX 97/3 - 8SDXL 97/3	13 (15)	17,5 (20)		61,8	57,9	52,8	48,3	44,7	41,7	37,2	32,7	27,9	22,2
8SDX 97/4 - 8SDXL 97/4	18,5	25		82,4	77,2	70,4	64,4	59,6	55,6	49,6	43,6	37,2	29,6
8SDX 97/5 - 8SDXL 97/5	22	30		103	96,5	88	80,5	74,5	69,5	62	54,5	46,5	37
8SDX 97/6 - 8SDXL 97/6	26 (30)	35 (40)		125	113	105	96,7	89	82,7	75	66,3	55	44
8SDX 97/7 - 8SDXL 97/7	30	40		146	132	123	113	104	96,4	87,5	77,4	64,2	51,3
8SDX 97/8 - 8SDXL 97/8	37	50		167	151	140	129	119	110	100	88,4	73,3	58,7
8SDX 97/9 - 8SDXL 97/9	37	50		188	170	158	145	134	124	113	99,5	82,5	66
8SDX 97/10 - 8SDXL 97/10	45	60		219	200	185	172	158	147	135	119	102	83,1
8SDX 97/11 - 8SDXL 97/11	51 (55)	70 (75)		241	220	204	189	174	162	149	131	112	91,4
8SDX 97/12 - 8SDXL 97/12	51 (55)	70 (75)		263	240	222	206	190	176	162	143	122	99,7
8SDX 97/13 - 8SDXL 97/13	55	75		285	260	241	223	206	191	176	155	132	108
8SDX 97/14 - 8SDXL 97/14	59 (75)	80 (100)		309	281	262	242	224	208	191	169	144	120
8SDX 97/15 - 8SDXL 97/15	66 (75)	90 (100)		331	302	279	261	240	222	205	182	156	129
8SDX 97/16 - 8SDXL 97/16	75	100		353	322	298	278	256	237	219	194	166	138
8SDX 97/17 - 8SDXL 97/17	75	100		375	342	317	295	272	251	233	206	176	147
8SDX 97/18 - 8SDXL 97/18	92	125		397	362	335	313	288	266	246	218	187	155
8SDX 97/19 - 8SDXL 97/19	92	125		419	382	354	330	304	281	260	230	197	164
8SDX 97/20 - 8SDXL 97/20	92	125		440	403	374	348	322	298	274	244	209	173
8SDX 97/21 - 8SDXL 97/21	92	125		462	424	393	365	338	313	288	257	219	182
8SDX 97/22 - 8SDXL 97/22	110	150		484	444	411	383	354	328	301	269	230	190
8SDX 97/23 - 8SDXL 97/23	110	150		507	464	430	400	370	343	315	281	240	199

DN	Motor CS-R mm	Motor FK mm	f mm	8SDXL kg
Rp 5”	145 6"	137 6"	644	31,5
			770	36,5
			896	41,5
			1022	46
			1148	51
			1274	56
			1400	61
			1526	66
			1657	72
	191 8"	196 8"	1783	77
			1909	82
			2035	87
			2161	92
			2287	97
			2413	102
			2539	106,5
			2665	111,5
			2791	116,5
			2917	121
			3043	126
	240 10"		3169	131
			3295	136

P2 Rated motor power output (...) FK motor rated power output **H** Total head in m Tolerances according to UNI EN ISO 9906:2012

CALPEDA ROMANIA - INFINITY PUMPS SRL
Tel: 0268.33.47.47 / 0722.244.944
vanzari@calpeda.ro | www.calpeda.ro

SDS

Submersible borehole pumps for 6”,8” and 10” wells

Construction

Submersible borehole pumps for 6” wells (DN 150 mm), 8” (DN 200 mm) and 10” (DN 250 mm), with stages in cast iron or in bronze, on request.

Impellers: - mixed flow impellers.

Connection: - screwed connection ISO 228 for 6SDS;
- flange with counter-flange for welding for 8SDS and 10SDS

Delivery casing with built-in non-return valve.

Applications

For water supply.
For civil and industrial applications.
For fire fighting applications.
For irrigation.

Operating conditions

Liquid temperature up to a 25 °C.
Max. sand quantity into the water: 150 g/m³ (300 g/m³ high percentage of solids and sand).
Continuous duty.

Rewindable motor CS, CS-R series

2-pole induction motor, 50 Hz (n ≈ 2900 rpm).
With water wetted winding in rewindable execution.
Sized for connection to the pumps according to NEMA Standards.
Standard voltages:
- three-phase 400 V; 400/690 V.

Voltage tolerance : +6% / -10%.

In order to limit both current and torque at each starting, for rated motor powers equal to or higher than 7.5kW, one of the following types of starting is necessary: star/delta, soft starter, stator impedance or autotransformer.

Operating conditions motor

Motor	Max. Liquid temperature	Cooling: minimum flow velocity	Max. starts per hour	Motor P2
6CS-R	30 °C	0,1 m/s	15	4÷11 kW
		0,2 m/s	15	13÷15 kW
	25 °C	0,2 m/s	15	18,5 kW
		0,2 m/s	13	22÷30 kW
	40 °C	0,1 m/s	13	37 kW
		0,3 m/s	6	45 kW
8CS-R	25 °C	0,3 m/s	10	30÷45 kW
			8	51÷75 kW
			6	92 kW
10CS	25 °C	0,50 m/s	10	all types

Insulation class E for 6-8” motors, PVC coated wire for 10” motors.
Motor suitable operation with frequency converter.
Protection IP 68.

Materials

Components	Part Nr.	6, 8, 10SDS	B-6, B-8, B-10SDS
Stage casing Diffuser Impeller	25.02 26.00 28.00	Cast iron GJL 200 EN 1561	Bronze G-Cu Sn 10 EN 1982
Wear ring		Rubber (Bronze for 10SDS 190-280)	
Shaft	64.00	6SDS e 8SDS: Steel AISI F51duplex 10SDS Cr steel AISI 420	Cr-Ni-Mo steel AISI 316
Shaft sleeve	64.08	Brass with chromate surface treatment (only for 10SDS)	
Delivery casing Suction lantern	12.01 32.02	Cast iron GJL 200 EN 1561	Bronze G-Cu Sn 10 EN 1982
Bearing bush	12.03-12.30	Rubber	
Strainer	15.50	Cr-Ni steel AISI 304	
Screws		Cr-Ni steel AISI 304	

CS, CS-R Motor

Components	CS-R 6”, 8”, CS 10” standard	I-CS-R 6”, 8”, I-CS 10” AISI 316
External frame	AISI 304 (AISI 316Ti for 10”)	Cr-Ni-Mo steel AISI 316 Ti
Motor flange	Cast iron GJL 200 EN 1561	Cr-Ni-Mo steel AISI 316
Shaft end	Steel AISI 431 (AISI 329 for 10”)	AISI 316 (AISI 630 from 30 to 93kW) (AISI 429 for 10”)
Thrust bearing	Oscillating pads	Oscillating pads
Bushings	Graphite (Bronze for 8” motor)	Graphite (Bronze for 8” motor)

Special features on request

- Other voltages.
- 60 Hz frequency.
- Other temperatures.
- Encapsulated motor **FK series**.

Designation

B 10 SDS 190 / 6

- Bronze construction (on request) — B
- Ø of the well in inches — 10
- Series — SDS
- Stage identification — 190
- Number of stages — 6

CALPEDA ROMANIA - INFINITY PUMPS SRL
Tel: 0268.33.47.47 / 0722.244.944
vanzari@calpeda.ro | www.calpeda.ro

SDS

Submersible borehole pumps for 6”,8” and 10” wells

Coverage chart n ≈ 2900 rpm

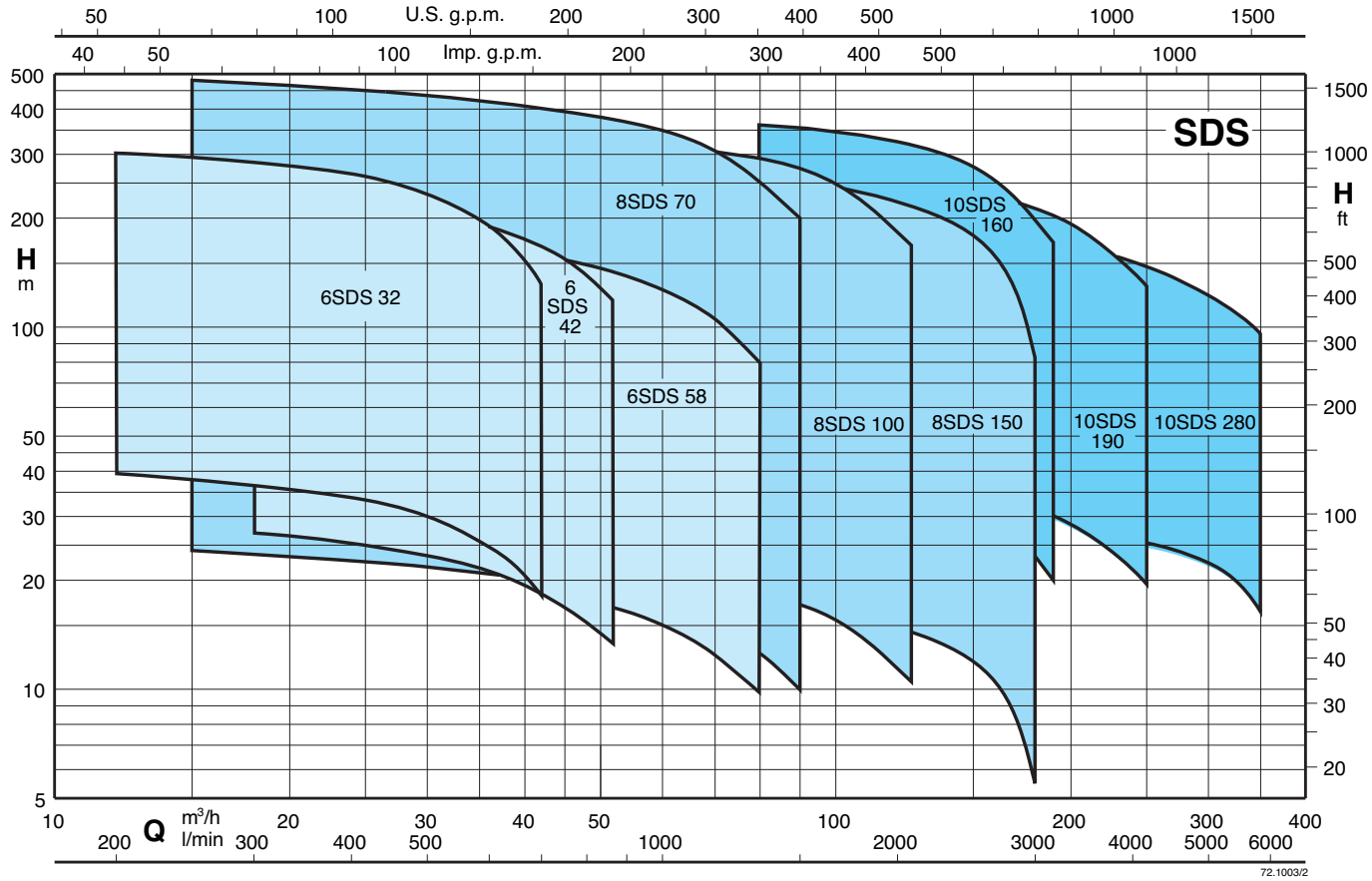

CALPEDA ROMANIA - INFINITY PUMPS SRL
Tel: 0268.33.47.47 / 0722.244.944
vanzari@calpeda.ro | www.calpeda.ro

6SDS 32

Submersible borehole pumps for 6” wells

Characteristic curves, performance n ≈ 2900 rpm, dimensions and weights

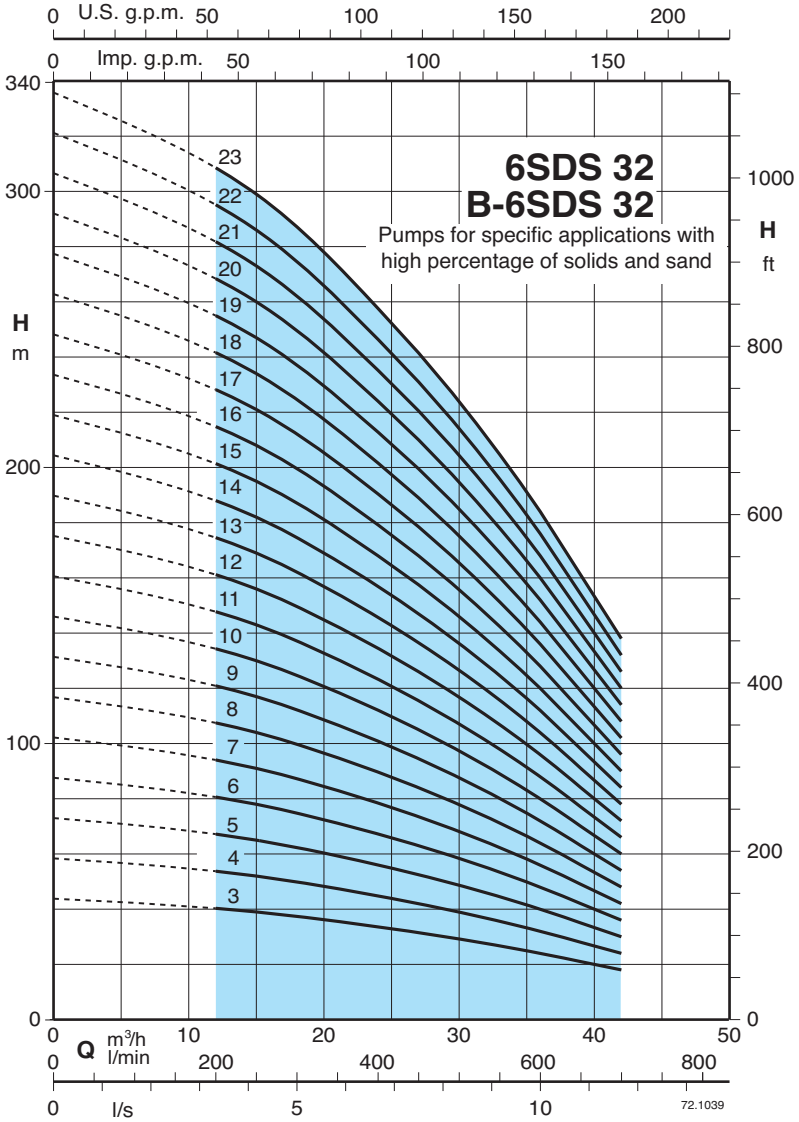

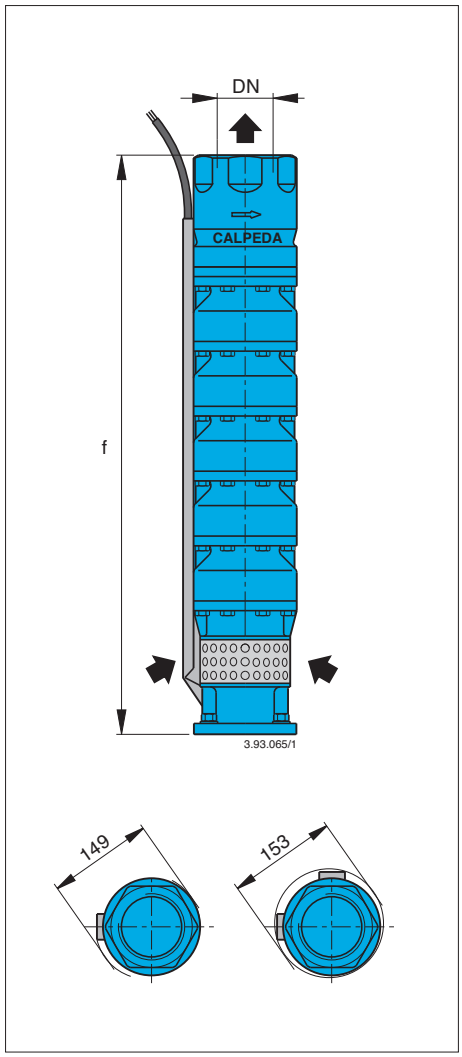

3 ~	P2		Q	n ≈ 2900 rpm										
			m³/h	12	18	21	24	27	30	33	36	39	42	
	kW	HP	l/min	200	300	350	400	450	500	550	600	650	700	
6SDS 32/3 - B-6SDS 32/3	4	5,5	H m	39	37	35,5	33,5	31,5	30	26,5	24	21	18	
6SDS 32/4 - B-6SDS 32/4	5,5	7,5		52	49	47	45	42	39,5	35,5	32	28	24	
6SDS 32/5 - B-6SDS 32/5	7,5	10		65	61,5	59	56	52,5	49,5	44,5	40	35	30	
6SDS 32/6 - B-6SDS 32/6	7,5	10		78	74	71	67	63	59,5	53,5	48	42	36	
6SDS 32/7 - B-6SDS 32/7	9,2	12,5		92	86	82,5	78,5	73,5	69	62	56	49	42	
6SDS 32/8 - B-6SDS 32/8	11	15		105	98,5	94,5	89,5	84	79	71	64	56	48	
6SDS 32/9 - B-6SDS 32/9	13 (15)	17,5 (20)		118	111	106	101	94,5	89	80	72	63	54	
6SDS 32/10 - B-6SDS 32/10	13 (15)	17,5 (20)		131	123	118	112	105	99	89	80	70	60	
6SDS 32/11 - B-6SDS 32/11	15	20		144	135	130	123	115	109	98	88	77	66	
6SDS 32/12 - B-6SDS 32/12	15	20		157	147	141	134	126	119	107	96	84	72	
6SDS 32/13 - B-6SDS 32/13	18,5	25		170	160	153	145	136	129	116	104	91	78	
6SDS 32/14 - B-6SDS 32/14	18,5	25		183	172	165	157	147	138	124	112	98	84	
6SDS 32/15 - B-6SDS 32/15	22	30		196	184	177	168	157	148	133	120	105	90	
6SDS 32/16 - B-6SDS 32/16	22	30		209	197	189	179	168	158	142	128	112	96	
6SDS 32/17 - B-6SDS 32/17	22	30		223	209	200	190	178	168	151	136	119	102	
6SDS 32/18 - B-6SDS 32/18	26 (30)	35 (40)		236	221	212	201	189	178	160	144	126	108	
6SDS 32/19 - B-6SDS 32/19	26 (30)	35 (40)		246	234	224	213	199	188	169	152	133	114	
6SDS 32/20 - B-6SDS 32/20	26 (30)	35 (40)		262	246	236	224	210	198	178	160	140	120	
6SDS 32/21 - B-6SDS 32/21	26 (30)	35 (40)		275	258	248	235	220	208	187	168	147	126	
6SDS 32/22 - B-6SDS 32/22	30	40		288	270	259	246	231	218	196	176	154	132	
6SDS 32/23 - B-6SDS 32/23	30	40		301	283	271	257	241	228	205	184	161	138	

DN	f	6SDS	B-6SDS
	mm	kg	kg
G 3 ISO 228	686	30,5	35,5
	788	35,6	41,6
	890	41	49
	992	46	55
	1094	52,3	62,3
	1196	57	68
	1298	62,5	74,5
	1400	68,5	81,5
	1502	72,5	86,5
	1604	77,5	93,5
	1706	84	101
	1808	89	108
	1910	94,2	112
	2012	100	119
	2114	105	125
	2216	111	132
	2318	116	139
	2420	122	145
	2522	127	151
	2624	132	157
	2726	137	164

P2 Rated motor power output (...) FK motor rated power output **H** Total head in m Tolerances according to UNI EN ISO 9906:2012

CALPEDA ROMANIA - INFINITY PUMPS SRL
Tel: 0268.33.47.47 / 0722.244.944
vanzari@calpeda.ro | www.calpeda.ro

6SDS 42

Submersible borehole pumps for 6” wells

Characteristic curves, performance n ≈ 2900 rpm, dimensions and weights

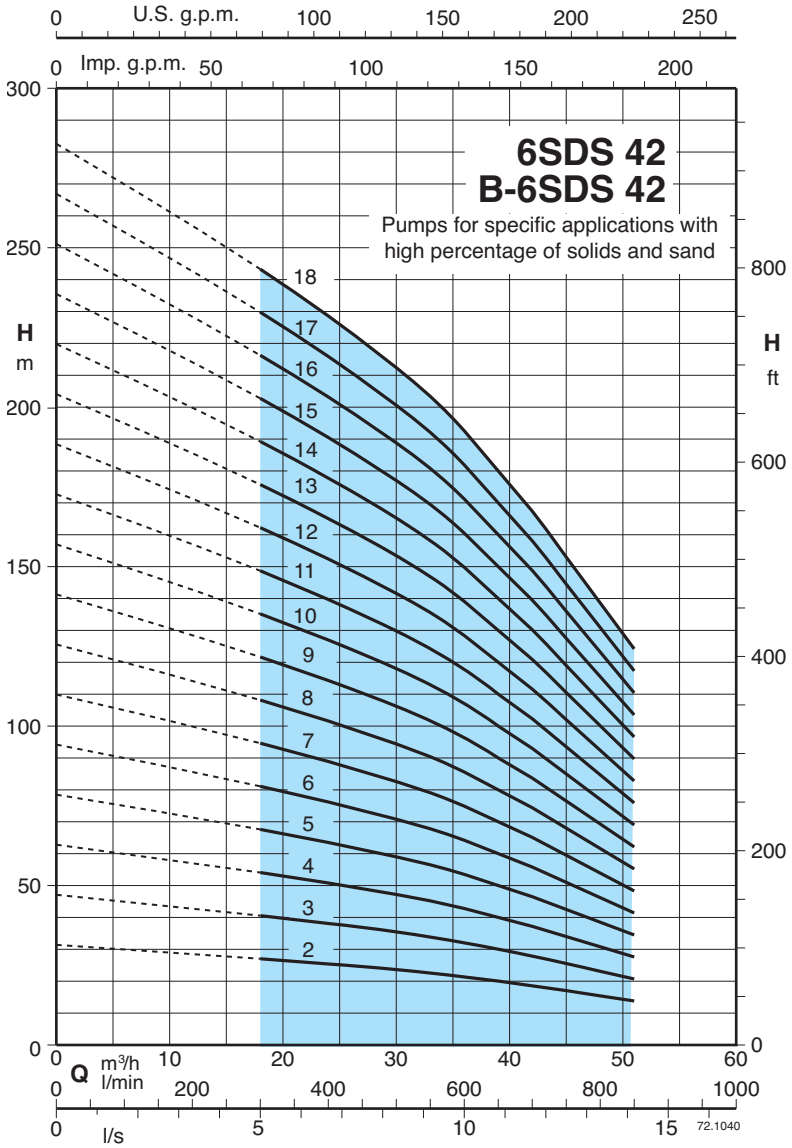

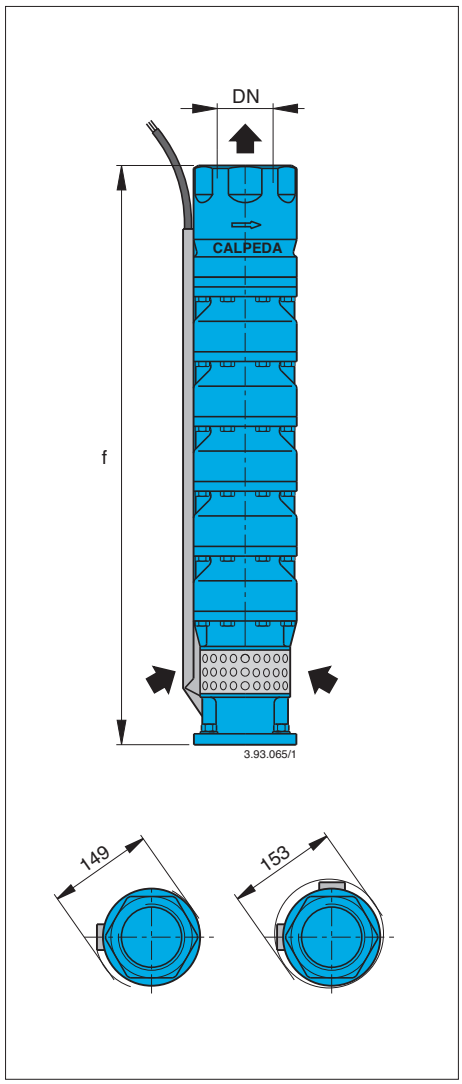

3 ~	P2		Q	n ≈ 2900 rpm										
			m³/h	18	24	30	33	36	39	42	45	48	51	
	kW	HP	l/min	300	400	500	550	600	650	700	750	800	850	
6SDS 42/2 - B-6SDS 42/2	4	5,5	H m	27	25,5	23,5	22,5	21,5	20	18,5	17	15,5	14	
6SDS 42/3 - B-6SDS 42/3	5,5	7,5		40	38	35,5	34	32	30	28	25,5	23	21	
6SDS 42/4 - B-6SDS 42/4	7,5	10		53,5	51	47	45	43	40	37	34	31	27,5	
6SDS 42/5 - B-6SDS 42/5	9,2	12,5		67	63,5	59	56,5	53,5	50	46,5	42,5	38,5	34,5	
6SDS 42/6 - B-6SDS 42/6	11	15		80,5	76	71	68	64	60	56	51	46	41,5	
6SDS 42/7 - B-6SDS 42/7	13 (15)	17,5 (20)		94	89	82,5	79	75	70	65	59,5	54	48	
6SDS 42/8 - B-6SDS 42/8	15	20		107	101	94,5	90,5	85,5	80	74,5	68	61,5	55	
6SDS 42/9 - B-6SDS 42/9	15	20		120	114	106	102	96	90	84	76,5	69	62	
6SDS 42/10 - B-6SDS 42/10	18,5	25		134	127	118	113	107	100	93	85	77	69	
6SDS 42/11 - B-6SDS 42/11	18,5	25		147	140	130	124	118	110	102	93,5	85	76	
6SDS 42/12 - B-6SDS 42/12	22	30		161	152	141	135	128	120	111	102	92,5	83	
6SDS 42/13 - B-6SDS 42/13	22	30		174	165	153	147	139	130	121	110	100	90	
6SDS 42/14 - B-6SDS 42/14	26 (30)	35 (40)		187	178	165	158	150	140	130	119	108	96,5	
6SDS 42/15 - B-6SDS 42/15	26 (30)	35 (40)		201	190	177	169	160	150	139	127	115	103	
6SDS 42/16 - B-6SDS 42/16	30	40		214	203	189	181	171	160	149	136	123	110	
6SDS 42/17 - B-6SDS 42/17	30	40		228	216	200	192	182	170	158	144	131	117	
6SDS 42/18 - B-6SDS 42/18	30	40		241	228	212	203	192	180	167	153	138	124	

DN	f	6SDS	B-6SDS
	mm	kg	kg
G 3 ISO 228	584	25,5	29,5
	686	31,6	36,6
	788	36	42
	890	40,3	48,3
	992	47	59
	1094	50,5	65,5
	1196	55,5	66,5
	1298	62,5	74,5
	1400	69	81
	1502	74	86
	1604	79,2	94,2
	1706	83,2	99,2
	1808	91,4	106
	1910	96,4	113
	2012	101	119
	2114	106	126
	2216	111	132

P2 Rated motor power output (...) FK motor rated power output **H** Total head in m Tolerances according to UNI EN ISO 9906:2012

CALPEDA ROMANIA - INFINITY PUMPS SRL
Tel: 0268.33.47.47 / 0722.244.944
vanzari@calpeda.ro | www.calpeda.ro

6SDS 58

Submersible borehole pumps for 6” wells

Characteristic curves, performance n ≈ 2900 rpm, dimensions and weights

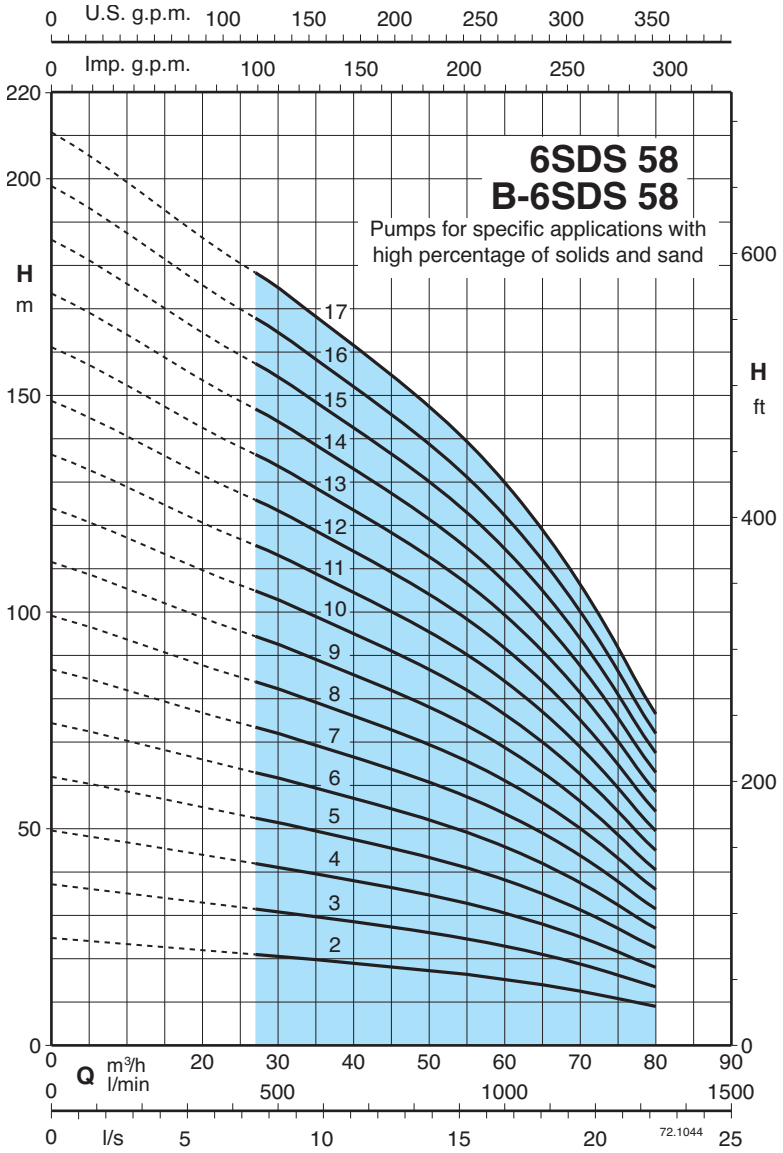

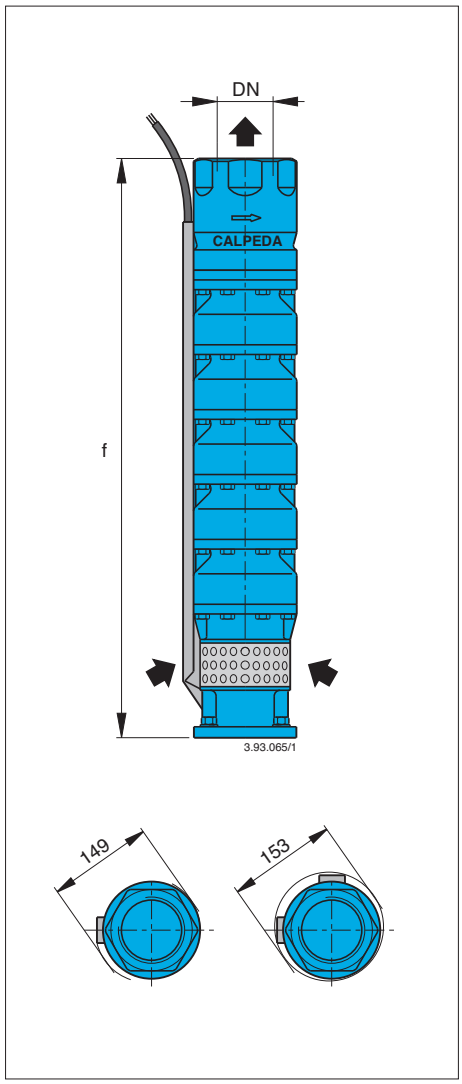

3 ~	P2		Q	n ≈ 2900 rpm										
			m³/h	27	35	40	45	50	55	60	65	70	75	80
	kW	HP	l/min	450	583	666	750	833	916	1000	1083	1166	1250	1333
6SDS 58/2 - B-6SDS 58/2	4	5,5	H m	21	20	19	18	17	16,5	15,5	14	12,5	11	9
6SDS 58/3 - B-6SDS 58/3	5,5	7,5		32	30	28,5	27	26	24,5	23	21	18,5	16	13,5
6SDS 58/4 - B-6SDS 58/4	7,5	10		42,5	39,5	38	36	34,5	33	31	28	25	21,5	18
6SDS 58/5 - B-6SDS 58/5	9,2	12,5		53	49,5	47,5	45	43	41	38,5	35	31	27	22,5
6SDS 58/6 - B-6SDS 58/6	11	15		63,5	59,5	57	54	51,5	49	46	42	37	32,5	27
6SDS 58/7 - B-6SDS 58/7	13 (15)	17,5 (20)		74	69,5	66,5	63	60	57,5	54	49	43,5	38	31,5
6SDS 58/8 - B-6SDS 58/8	15	20		85	79	76	72	69	66	62	56	49,5	43	36
6SDS 58/9 - B-6SDS 58/9	18,5	25		95,5	89	85,5	81	77,5	74	69,5	63	56	49	40,5
6SDS 58/10 - B-6SDS 58/10	18,5	25		106	99	95	90	86	82	77	70	62	54	45
6SDS 58/11 - B-6SDS 58/11	22	30		117	109	104	99	94,5	90	85	77	68	59,5	49,5
6SDS 58/12 - B-6SDS 58/12	22	30		127	119	114	108	103	100	94,5	86,5	76,5	66,5	55,5
6SDS 58/13 - B-6SDS 58/13	26 (30)	35 (40)		138	129	123	117	112	107	100	91	80,5	70	58,5
6SDS 58/14 - B-6SDS 58/14	26 (30)	35 (40)		148	139	133	126	120	115	108	98	87	75,5	63
6SDS 58/15 - B-6SDS 58/15	30	40		159	148	142	135	129	123	115	105	93	81	67,5
6SDS 58/16 - B-6SDS 58/16	30	40		170	158	152	144	138	131	123	112	99	86,5	72
6SDS 58/17 - B-6SDS 58/17	30	40		180	168	162	153	146	139	131	119	105	92	76,5

DN	f	6SDS	B-6SDS
	mm	kg	kg
G 4 ISO 228	584	26,5	29,5
	686	31,6	36,6
	788	37	43
	890	43,3	50,3
	992	48	57
	1094	53,5	63,5
	1196	59,5	70,5
	1298	65	77
	1400	71	84
	1502	76,2	90,2
	1604	82,2	97,2
	1706	87,4	104
	1808	93,4	111
	1910	99,4	118
	2012	104	124
	2114	110	131

P2 Rated motor power output (...) FK motor rated power output **H** Total head in m Tolerances according to UNI EN ISO 9906:2012

CALPEDA ROMANIA - INFINITY PUMPS SRL
Tel: 0268.33.47.47 / 0722.244.944
vanzari@calpeda.ro | www.calpeda.ro

8SDS 70

Submersible borehole pumps for 8” wells

Characteristic curves, performance n ≈ 2900 rpm, dimensions and weights

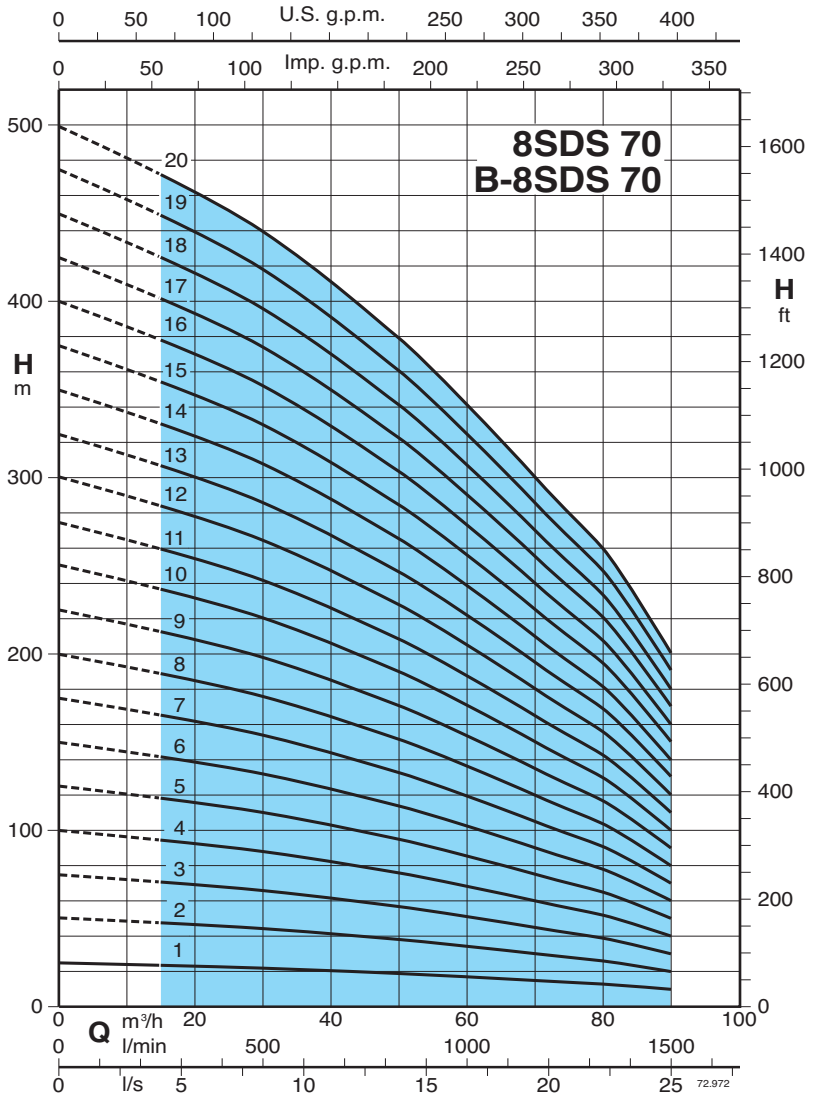

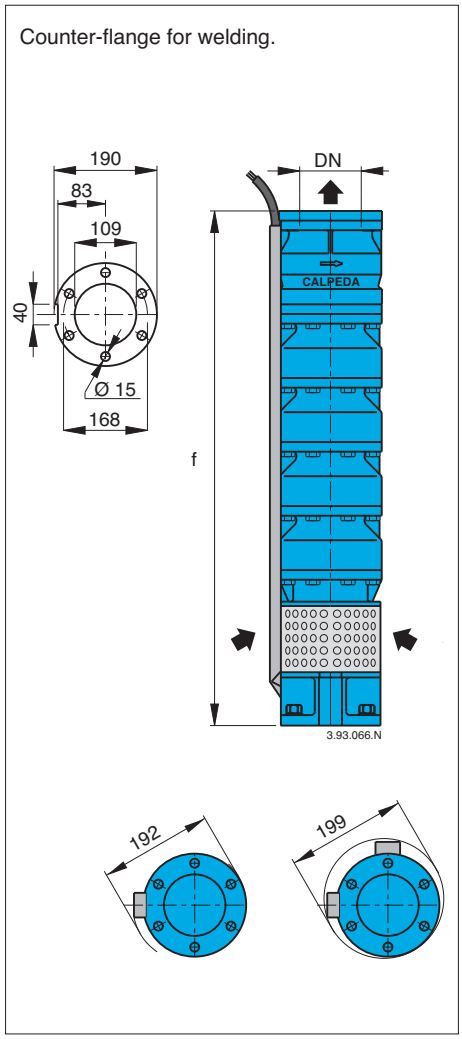

3 ~	P2		Q	n ≈ 2900 rpm									
			m³/h	15	20	30	40	50	60	70	80	90	
	kW	HP	l/min	250	333	500	666	833	1000	1166	1333	1500	
8SDS 70/1 - B-8SDS 70/1	5,5	7,5	H m	23,5	23	22	20,5	19	17	15	13	10	
8SDS 70/2 - B-8SDS 70/2	9,2	12,5		47	46	44	41	38	34	30	26	20	
8SDS 70/3 - B-8SDS 70/3	15	20		70,5	69	66	61,5	57	51	45	39	30	
8SDS 70/4 - B-8SDS 70/4	18,5	25		94	92	88	82	76	68	60	52	40	
8SDS 70/5 - B-8SDS 70/5	22	30		118	115	110	102	95	85	75	65	50	
8SDS 70/6 - B-8SDS 70/6	26 (30)	35 (40)		141	138	132	123	114	102	90	78	60	
8SDS 70/7 - B-8SDS 70/7	30	40		165	161	154	143	133	119	105	91	70	
8SDS 70/8 - B-8SDS 70/8	37	50		188	184	176	164	152	136	120	104	80	
8SDS 70/9 - B-8SDS 70/9	45	60		212	207	198	184	171	153	135	117	90	
8SDS 70/10 - B-8SDS 70/10	45	60		235	230	220	205	190	170	150	130	100	
8SDS 70/11 - B-8SDS 70/11	51 (55)	70 (75)		259	253	242	225	209	187	165	143	110	
8SDS 70/12 - B-8SDS 70/12	55	75		282	276	264	246	228	204	180	156	120	
8SDS 70/13 - B-8SDS 70/13	59 (75)	80 (100)		306	299	286	266	247	221	195	169	130	
8SDS 70/14 - B-8SDS 70/14	59 (75)	80 (100)		329	322	308	287	266	238	210	182	140	
8SDS 70/15 - B-8SDS 70/15	66 (75)	90 (100)		353	345	330	307	285	255	225	195	150	
8SDS 70/16 - B-8SDS 70/16	75	100		376	368	352	328	304	272	240	208	160	
8SDS 70/17 - B-8SDS 70/17	75	100		400	391	374	348	323	289	255	221	170	
8SDS 70/18 - B-8SDS 70/18	92	125		423	414	396	369	342	306	270	234	180	
8SDS 70/19 - B-8SDS 70/19	92	125		447	437	418	389	361	323	285	247	190	
8SDS 70/20 - B-8SDS 70/20	92	125		470	460	440	410	380	340	300	260	200	

DN	Motor CS-R mm	Motor FK mm	f mm	8SDS kg	B-8SDS kg
100	145 6”	137 6”	602	38	43
			734	49	55,5
			866	60	68
			998	71,5	80,5
			1130	82,5	93
			1262	93,5	106
			1394	105	118
			1526	116	131
			1658	127	143
			1790	138	156
	191 8”	196 8”	1922	149	168
			2054	160	181
			2186	171	194
			2318	182	206
			2450	193	219
			2582	205	231
			2714	216	244
			2846	227	256
			2978	238	269
			3110	249	281

P_2 Rated motor power output (...) FK motor rated power output **H** Total head in m Tolerances according to UNI EN ISO 9906:2012

CALPEDA ROMANIA - INFINITY PUMPS SRL
Tel: 0268.33.47.47 / 0722.244.944
vanzari@calpeda.ro | www.calpeda.ro

8SDS 100

Submersible borehole pumps for 8” wells

Characteristic curves, performance n ≈ 2900 rpm, dimensions and weights

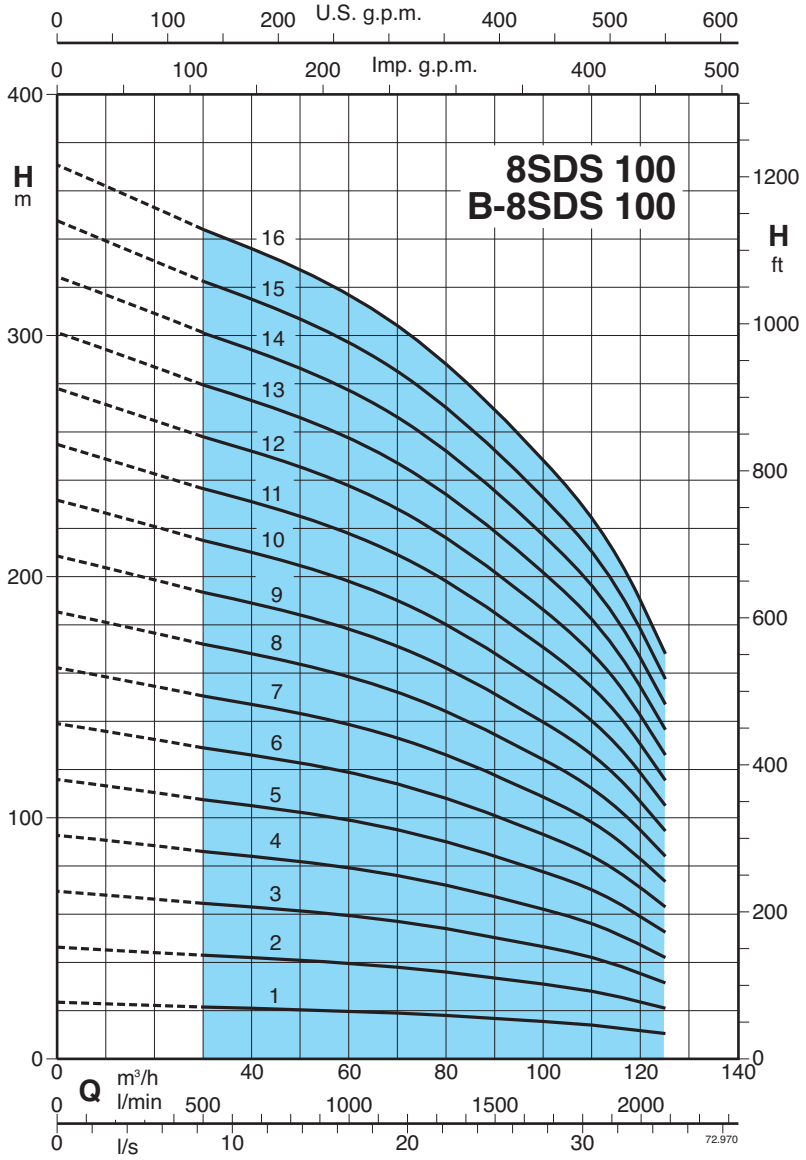

Counter-flange for welding.

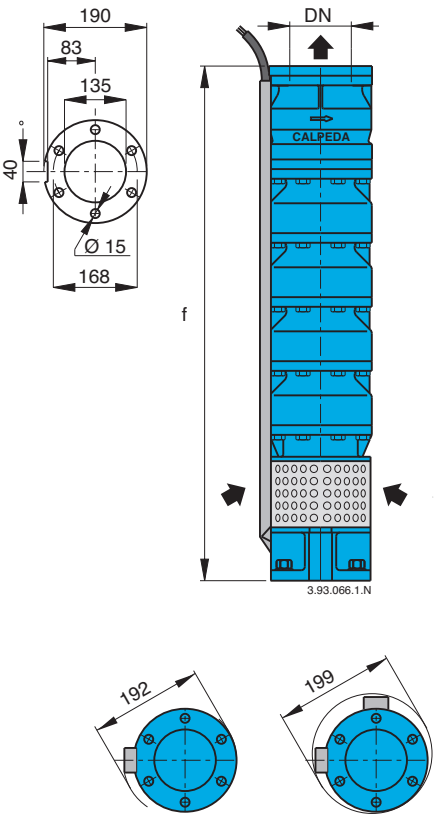

3 ~		P2		Q	n ≈ 2900 rpm									
				m³/h	30	40	50	60	70	80	90	100	110	125
		kW	HP	l/min	500	666	833	1000	1166	1333	1500	1666	1833	2083
8SDS 100/1	- B-8SDS 100/1	5,5	7,5	H m	21,5	21	20,5	20	19	18	17	15,5	14	10,5
8SDS 100/2	- B-8SDS 100/2	11	15		43	42	41	40	38	36	34	31	28	21
8SDS 100/3	- B-8SDS 100/3	18,5	25		64,5	63	61,5	60	57	54	51	46,5	42	31,5
8SDS 100/4	- B-8SDS 100/4	22	30		86	84	82	80	76	72	68	62	56	42
8SDS 100/5	- B-8SDS 100/5	30	40		107	105	102	100	95	90	85	77,5	70	52,5
8SDS 100/6	- B-8SDS 100/6	37	50		129	126	123	120	114	108	102	93	84	63
8SDS 100/7	- B-8SDS 100/7	45	60		150	147	143	140	133	126	119	108	98	73,5
8SDS 100/8	- B-8SDS 100/8	45	60		172	168	164	160	152	144	136	124	112	84
8SDS 100/9	- B-8SDS 100/9	51 (55)	70 (75)		193	189	184	180	171	162	153	139	126	94,5
8SDS 100/10	- B-8SDS 100/10	55	75		215	210	205	200	190	180	170	155	140	105
8SDS 100/11	- B-8SDS 100/11	66 (75)	90 (100)		236	231	225	220	209	198	187	170	154	115
8SDS 100/12	- B-8SDS 100/12	66 (75)	90 (100)		258	252	246	240	228	216	204	186	168	126
8SDS 100/13	- B-8SDS 100/13	75	100		279	273	266	260	247	234	221	201	182	136
8SDS 100/14	- B-8SDS 100/14	92	125		301	294	287	280	266	252	238	217	196	147
8SDS 100/15	- B-8SDS 100/15	92	125		322	315	307	300	285	270	255	232	210	157
8SDS 100/16	- B-8SDS 100/16	92	125		344	336	328	320	304	288	272	248	224	168

DN	Motor CS-R mm	Motor FK mm	f mm	8SDS kg	B-8SDS kg
125	145 6”	137 6”	602	38	43
			734	49	55
			866	59	67
			998	70	79
			1130	81	91
			1262	92	103
			1394	102	115
			1526	113	128
	191 8”	196 8”	1658	124	140
			1790	135	152
			1922	145	164
			2054	156	176
			2186	167	188
			2318	177	200
			2450	188	212
			2582	199	224

P_2 Rated motor power output (...) FK motor rated power output **H** Total head in m Tolerances according to UNI EN ISO 9906:2012

CALPEDA ROMANIA - INFINITY PUMPS SRL
Tel: 0268.33.47.47 / 0722.244.944
vanzari@calpeda.ro | www.calpeda.ro

8SDS 150

Submersible borehole pumps for 8” wells

Characteristic curves, performance n ≈ 2900 rpm, dimensions and weights

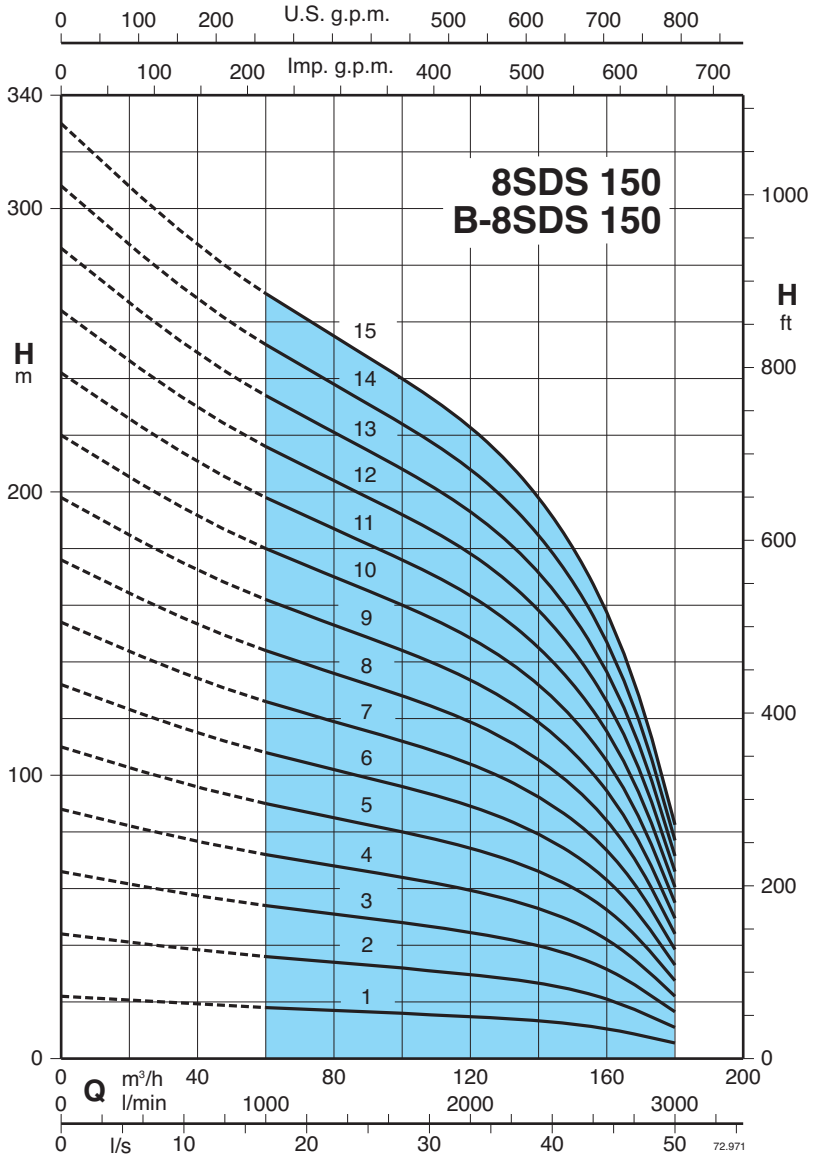

Counter-flange for welding.

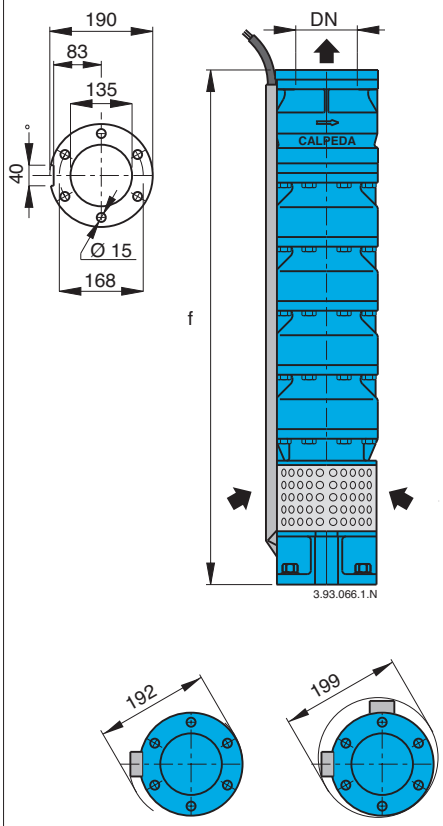

3 ~	P2		Q	n ≈ 2900 rpm											DN	Motor		f	8SDS	B-8SDS
			m³/h	60	70	80	90	100	110	125	140	150	160	180		CS-R mm	FK mm	mm	kg	kg
	kW	HP	l/min	1000	1166	1333	1500	1666	1833	2083	2333	2500	2666	3000						
8SDS 150/1 - B-8SDS 150/1	7,5	10	H m	18	17,5	17	16,5	16	15,5	14,5	13	11,5	10,5	5,5	125	145 6”	137 6”	602	38	43
8SDS 150/2 - B-8SDS 150/2	15	20		36	35	34	33	32	31	29	26	23	21	11				734	49	55,5
8SDS 150/3 - B-8SDS 150/3	22	30		54	52,5	51	49,5	48	46,5	43,5	39	34,5	31,5	16,5				866	60	68
8SDS 150/4 - B-8SDS 150/4	30	40		72	70	68	66	64	62	58	52	46	42	22				998	71,5	80,5
8SDS 150/5 - B-8SDS 150/5	37	50		90	87,5	85	82,5	80	77,5	72,5	65	57,5	52,5	27,5				1130	82,5	93
8SDS 150/6 - B-8SDS 150/6	45	60		108	105	102	99	96	93	87	78	69	63	33				1262	93,5	106
8SDS 150/7 - B-8SDS 150/7	51 (55)	70 (75)		126	122	119	115	112	108	101	91	80,5	73,5	38,5		191 8”	196 8”	1394	105	118
8SDS 150/8 - B-8SDS 150/8	59 (75)	80 (100)		144	140	136	132	128	124	116	104	92	84	44				1526	116	131
8SDS 150/9 - B-8SDS 150/9	66 (75)	90 (100)		162	157	153	148	144	139	130	117	103	94,5	49,5				1658	127	143
8SDS 150/10 - B-8SDS 150/10	75	100		180	175	170	165	160	155	145	130	115	105	55				1790	138	156
8SDS 150/11 - B-8SDS 150/11	92	125		198	192	187	181	176	170	159	143	126	115	60,5				1922	149	168
8SDS 150/12 - B-8SDS 150/12	92	125		216	210	204	198	192	186	174	156	138	126	66				2054	160	181
8SDS 150/13 - B-8SDS 150/13	110	150		234	227	221	214	208	201	188	169	149	136	71,5		240 10”		2186	171	194
8SDS 150/14 - B-8SDS 150/14	110	150		252	245	238	231	224	217	203	182	161	147	77				2318	182	206
8SDS 150/15 - B-8SDS 150/15	110	150		270	262	255	247	240	232	217	195	172	157	82,5				2450	193	219

P2 Rated motor power output (...) FK motor rated power output **H** Total head in m Tolerances according to UNI EN ISO 9906:2012

CALPEDA ROMANIA - INFINITY PUMPS SRL
Tel: 0268.33.47.47 / 0722.244.944
vanzari@calpeda.ro | www.calpeda.ro

10SDS 160

Submersible borehole pumps for 10” wells

Characteristic curves, performance n ≈ 2900 rpm, dimensions and weights

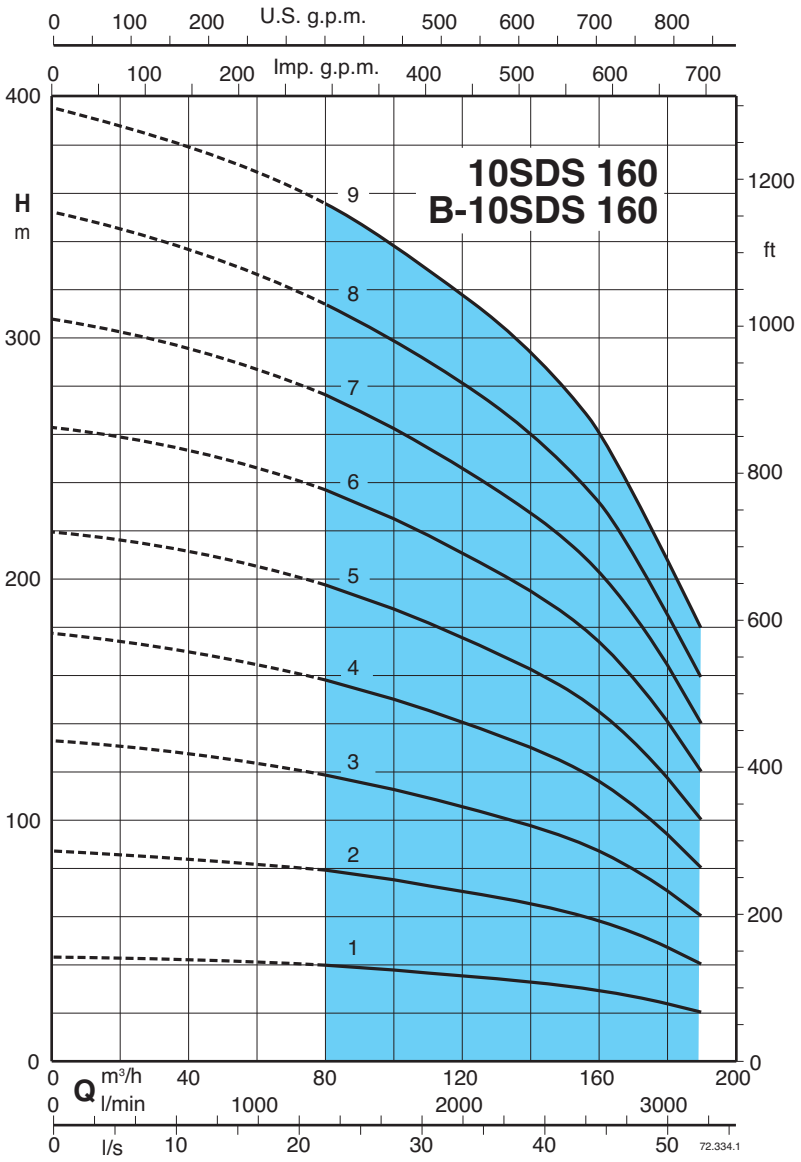

Counter-flange for welding.

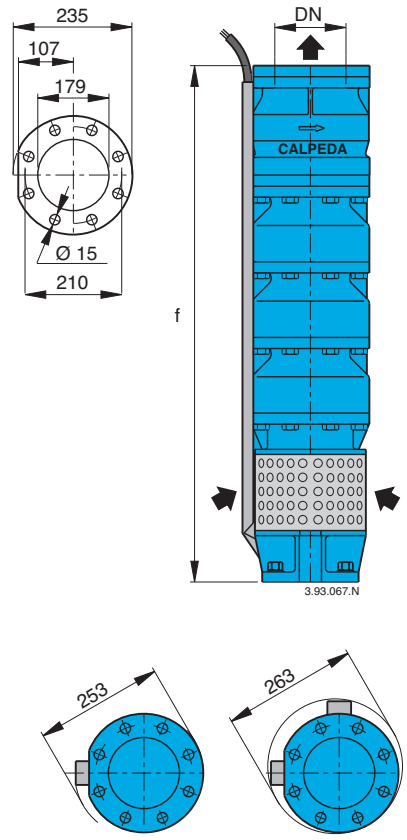

3 ~	P2		Q	n ≈ 2900 rpm										
			m³/h	80	90	100	110	125	140	150	160	170	180	190
	kW	HP	l/min	1333	1500	1666	1833	2083	2333	2500	2666	2833	3000	3166
10SDS 160/1 - B-10SDS 160/1	18,5	25	H m	39,5	38	37,5	36	34,5	32,5	31	29	26,5	22	20
10SDS 160/2 - B-10SDS 160/2	37	50		78,5	76,5	74,5	72,5	69	65	62	58,5	53,5	44	40
10SDS 160/3 - B-10SDS 160/3	55	75		118	114	112	108	104	98	92,5	87,5	80	66,5	60
10SDS 160/4 - B-10SDS 160/4	75	100		157	153	149	145	138	130	123	117	107	88,5	80
10SDS 160/5 - B-10SDS 160/5	92	125		196	191	186	181	173	163	154	146	134	111	100
10SDS 160/6 - B-10SDS 160/6	110	150		236	229	224	217	207	195	185	175	160	133	120
10SDS 160/7 - B-10SDS 160/7	130	175		275	267	261	253	242	228	216	204	187	155	140
10SDS 160/8 - B-10SDS 160/8	150	200		314	305	298	289	276	260	246	233	213	177	160
10SDS 160/9 - B-10SDS 160/9	185	250		356	342	338	324	311	293	279	261	239	198	180

DN	Motor CS-R mm	Motor FK mm	f mm	10SDS kg	B-10SDS kg
175	145 6”	137 6”	865	77	87
			1035	103	114
	191 8”	196 8”	1205	126	141
			1375	150	169
			1545	173	195
	240 10”		1715	197	222
			1885	220	249
			2055	244	276
		-	2225	268	303

P2 Rated motor power output (...) FK motor rated power output **H** Total head in m Tolerances according to UNI EN ISO 9906:2012

CALPEDA ROMANIA - INFINITY PUMPS SRL
Tel: 0268.33.47.47 / 0722.244.944
vanzari@calpeda.ro | www.calpeda.ro

10SDS 190

Submersible borehole pumps for 10” wells

Characteristic curves, performance n ≈ 2900 rpm, dimensions and weights

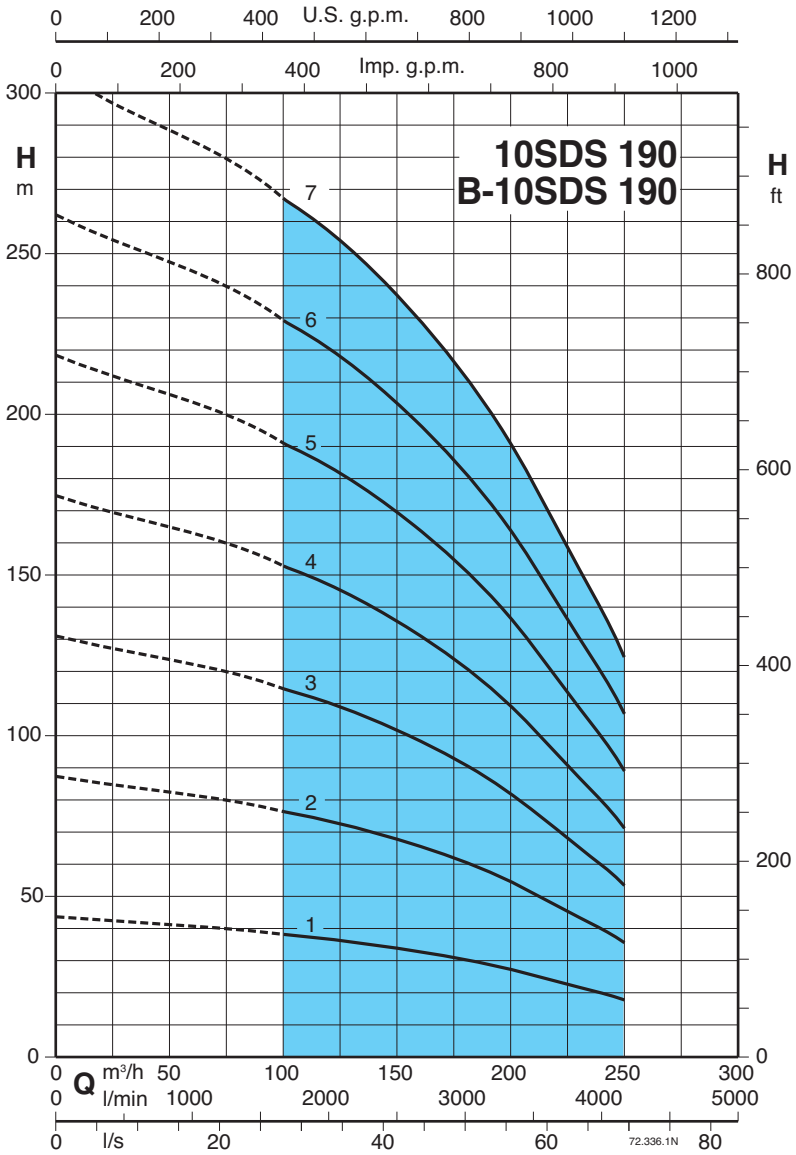

Counter-flange for welding.

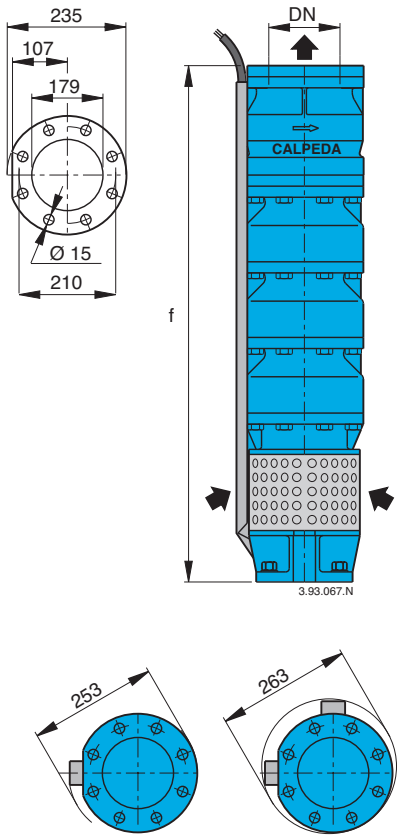

3 ~	P2		Q	n ≈ 2900 rpm									
			m³/h	100	120	140	160	180	200	220	230	240	250
	kW	HP	l/min	1666	2000	2333	2666	3000	3333	3666	3833	4000	4166
10SDS 190/1 - B-10SDS 190/1	22	30	H m	38	37	35	33	30	27	24	22	20	18
10SDS 190/2 - B-10SDS 190/2	45	60		76	73	70	66	61	55	47	44	40	36
10SDS 190/3 - B-10SDS 190/3	66 (75)	90 (100)		115	110	105	98	91	82	71	65	59	53
10SDS 190/4 - B-10SDS 190/4	92	125		153	147	140	131	121	109	95	87	79	71
10SDS 190/5 - B-10SDS 190/5	110	150		191	183	175	164	152	137	119	109	99	89
10SDS 190/6 - B-10SDS 190/6	130	175		229	220	210	197	182	164	142	131	119	107
10SDS 190/7 - B-10SDS 190/7	185	250		267	257	244	230	212	191	166	152	139	125

DN	Motor CS-R mm	Motor FK mm	f mm	10SDS kg	B-10SDS kg
175	145 6”	137 6”	865	78	88
			1035	102	115
	191 8”	196 8”	1205	127	143
			1375	151	170
	240 10”		1545	175	198
			1715	199	225
		-	1885	223	252

P2 Rated motor power output (...) FK motor rated power output **H** Total head in m Tolerances according to UNI EN ISO 9906:2012

CALPEDA ROMANIA - INFINITY PUMPS SRL
Tel: 0268.33.47.47 / 0722.244.944
vanzari@calpeda.ro | www.calpeda.ro

10SDS 280

Submersible borehole pumps for 10” wells

Characteristic curves, performance n ≈ 2900 rpm, dimensions and weights

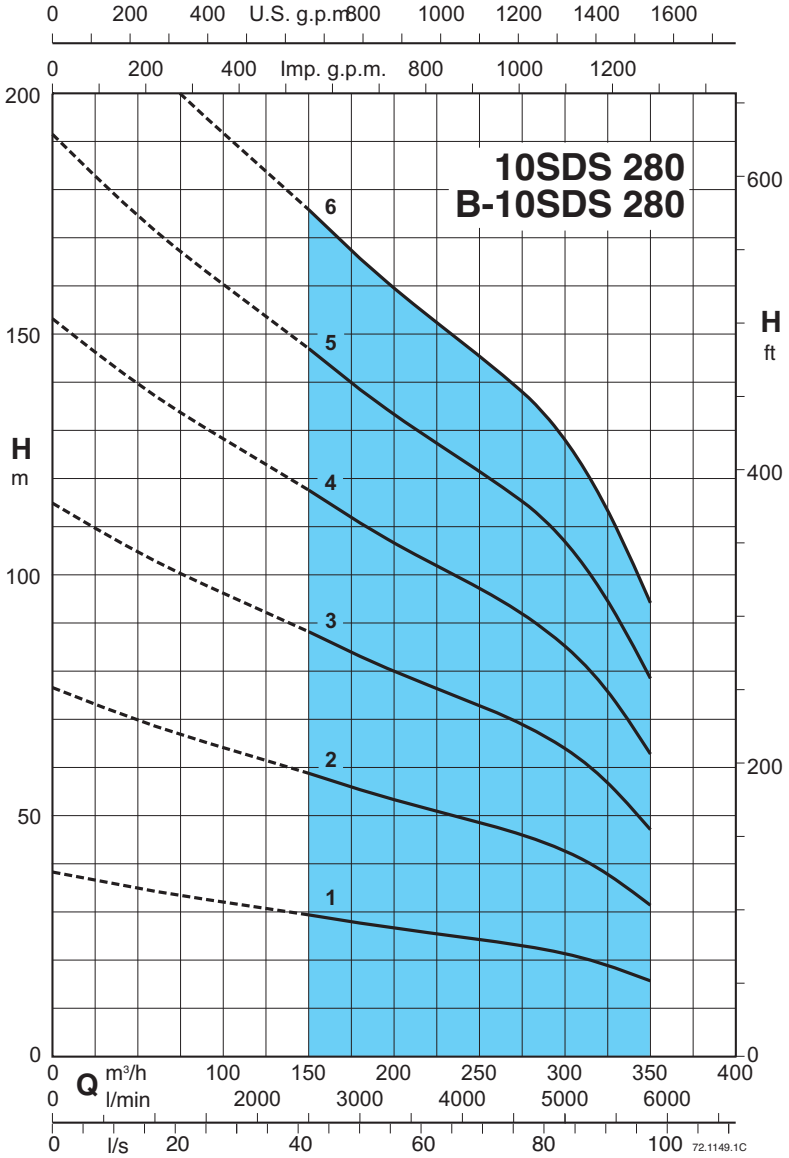

Counter-flange for welding.

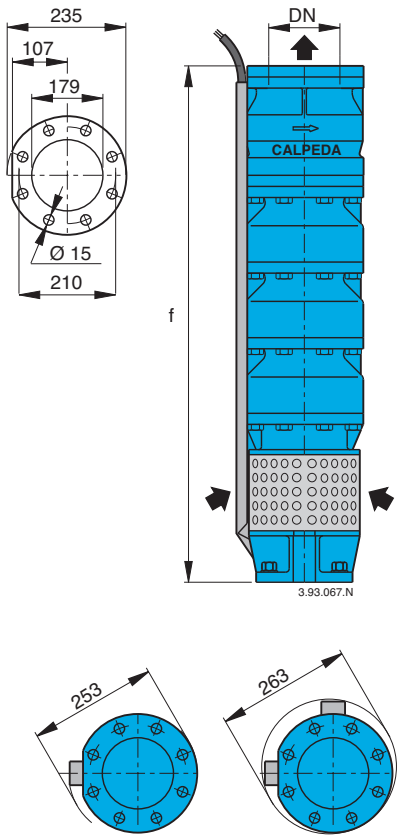

3 ~	P2		Q	n ≈ 2900 rpm									
			m³/h	150	180	200	220	240	260	280	300	315	350
	kW	HP	l/min	2500	3000	3333	3666	4000	4333	4666	5000	5250	5833
10SDS 280/1 - B-10SDS 280/1	26 (30)	35 (40)	H m	29	28	27	26	25	24	23	21	20	16
10SDS 280/2 - B-10SDS 280/2	55	75		59	55	53	51	50	48	46	42	40	31
10SDS 280/3 - B-10SDS 280/3	75	100		88	83	80	77	75	71	69	64	60	47
10SDS 280/4 - B-10SDS 280/4	110	150		118	111	106	103	100	95	92	85	80	63
10SDS 280/5 - B-10SDS 280/5	130	175		147	139	133	129	125	119	115	106	100	79
10SDS 280/6 - B-10SDS 280/6	150	200		176	167	160	155	150	143	138	127	120	95

DN	Motor CS-R mm	Motor FK mm	f mm	10SDS kg	B-10SDS kg
175	145-6”	137-6”	865	78	88
	191 8”	196 8”	1035	103	116
			1205	127	143
	240 10”		1375	151	170
			1545	175	198
			1715	199	226

P2 Rated motor power output (...) FK motor rated power output **H** Total head in m Tolerances according to UNI EN ISO 9906:2012

CALPEDA ROMANIA - INFINITY PUMPS SRL
Tel: 0268.33.47.47 / 0722.244.944
vanzari@calpeda.ro | www.calpeda.ro

SD, SDS

Submersible pumps

Cables connection kit

It allows connection of electric cables with junction submerged in water.
The kit includes:
- 4 connectors
- 4 shrink-sheaths for protection of individual wires
- 1 shrink-sheath for protection of the 4-pole wire.

The sheath shrinks with heating (flame or drier) which causes resin outlet granting connection waterproofing.

Installation examples

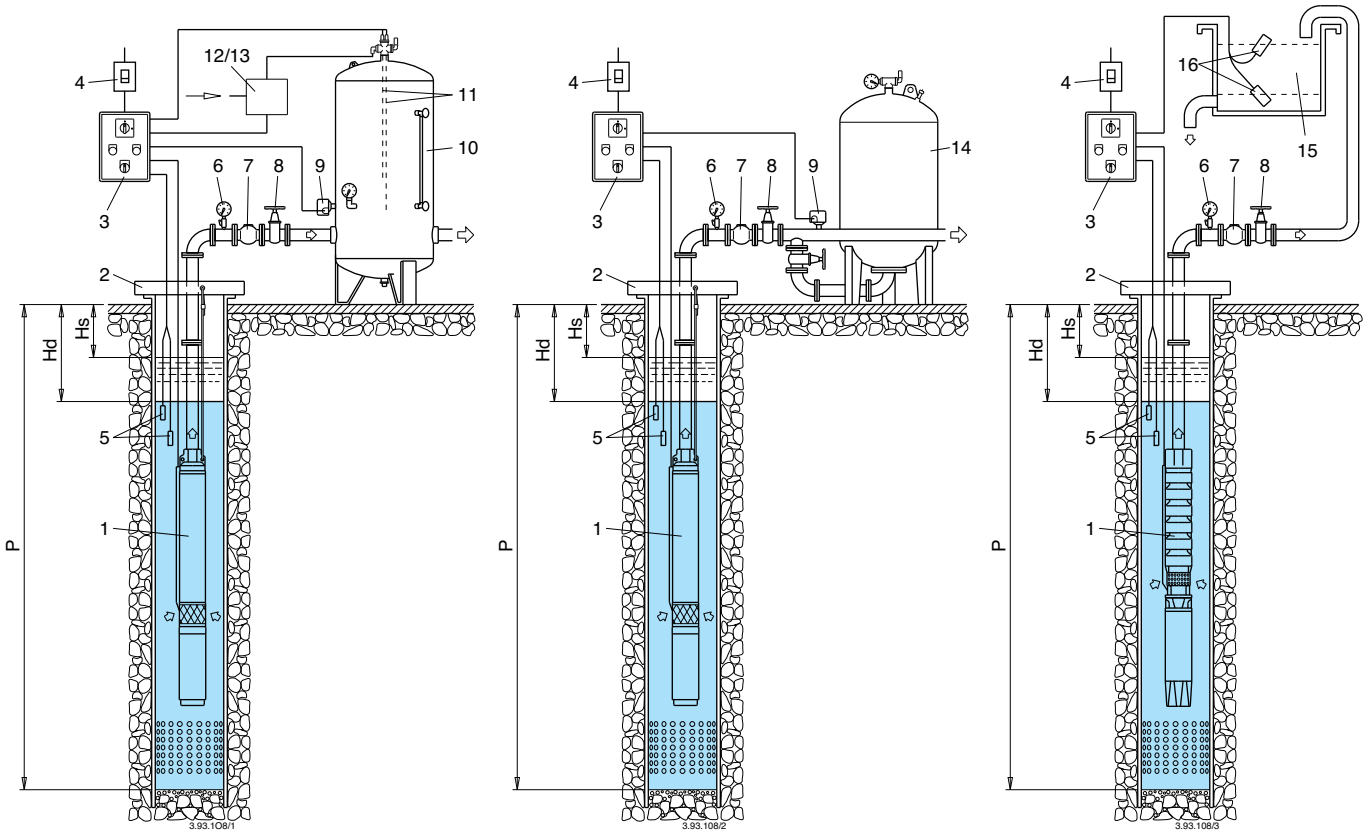

1 Submersible pump
2 Pump support system
3 Electric control board
4 Circuit breaker
5 Minimum level probes
6 Pressure gauge
7 Check valve
8 Throttle gate valve
9 Pressure switch
10 Pressure tank
11 Probes for air entry control
12 Electric valve
13 Compressor
14 Membrane tank
15 Storage tank
16 Start-stop probes

Hs Static level
Hd Dynamic level
P Tubewell depth

CALPEDA ROMANIA - INFINITY PUMPS SRL
Tel: 0268.33.47.47 / 0722.244.944
vanzari@calpeda.ro | www.calpeda.ro

CS, CS-R, FK

Submersible motors

The Calpeda 4”, 6”, 8” and 10" submersible motors are built using advanced technology and components of superior quality that they ensure good mechanical strength and excellent electrical reliability.
The good performances are guaranteed thanks to strict tests of all the different components during the various production phases.

Rewindable motor CS, CS-R series

The **CS-R** 6/8/10" motors are in a water bath with the wire being coated with polyvinyl chloride, while the **CS** 4” motors have a special food grade dielectric fluid that gives a better lubricant effect, increasing the life of all moving parts and the copper wires.
The special design of all our motors allows easy access to the various components, simplifying maintenance and repair.
All the **CS,CS-R** motors can be rewound and they are NEMA STANDARD.

CS, CS-R: Standard construction.
I-CS, I-CS-R: AISI 316 construction.

Encapsulated motor FK series

The **FK** motors, manufactured to ISO 9001 standards feature an hermetically sealed stator, where the self healing stator resin prevents motor burn out.
They are designed for high electrical efficiency, low cost, and non contaminating water-filled design.
Water lubricated thrust and radial bearings allow a maintenance free operation. A special diaphragm ensures pressure compensation inside the motor.
For facilitating the connection, removable “Water Bloc” lead connector is used and for increasing the performance in sand the FK 6/8” have a sand fighter with SiC-Mechanical Seal.

FK: Standard construction.
I-FK: AISI 316 construction.

kW	4" 1 ~		4" 3 ~			6" 3 ~				8" 3 ~				10" 3 ~		kW
	CS	FK	CS	FK	I-FK 316	CS-R	I-CS-R 316	FK	I-FK 316	CS-R	I-CS-R 316	FK	I-FK 316	CS	I-CS 316	
0,37	●	●	●	●	●											0,37
0,55	●	●	●	●	●											0,55
0,75	●	●	●	●	●											0,75
1,1	●	●	●	●	●											1,1
1,5	●	●	●	●	●											1,5
2,2	●	●	●	●	●											2,2
3			●	●	●											3
4			●	●	●	●	●	●	●							4
5,5			●	●	●	●	●	●	●							5,5
7,5				●	●	●	●	●	●							7,5
9,2						●	●	●	●							9,2
11						●	●	●	●							11
13						●	●									13
15						●	●	●	●							15
18,5						●	●	●	●							18,5
22						●	●	●	●							22
26						●	●									26
30						●	●	●	●	●	●	●	●			30
37						●	●	●		●	●	●	●			37
45						●	●	●	●	●	●	●	●			45
51										●	●					51
55												●	●			55
59										●	●					59
66										●	●					66
75										●	●	●	●			75
85														●	●	85
92										●	●	●	●			92
110												●	●	●	●	110
130												●	●	●	●	130
150												●	●	●	●	150
185														●	●	185

4.93.325

● Rewindable motor CS, CS-R series ● Encapsulated motor FK series

CALPEDA ROMANIA - INFINITY PUMPS SRL
Tel: 0268.33.47.47 / 0722.244.944
vanzari@calpeda.ro | www.calpeda.ro

CS, CS-R, FK

Submersible motors

calpeda

Rewindable motor CS, CS-R series

Operating conditions

Motor	P2	Max. Liquid temperature	Cooling minimum flow velocity	Max. starts per hour
4CS	all types	35 °C	0,08 m/s	20
6CS-R	4÷11 kW	30 °C	0,1 m/s	15
	13÷15 kW	30 °C	0,2 m/s	15
	18,5 kW	25 °C	0,2 m/s	15
	22÷30 kW	25 °C	0,2 m/s	13
	37 kW	40 °C	0,1 m/s	13
	45 kW	40 °C	0,3 m/s	6
8CS-R	30÷45 kW	25 °C	0,3 m/s	10
	51÷75 kW	25 °C	0,3 m/s	8
	92 kW	25 °C	0,3 m/s	6
10CS	all types	25 °C	0,50 m/s	10

Continuous duty.

Operation data

2-pole induction motor, 50 Hz (n ≈ 2900 rpm).
Sized for connection to the pumps according to NEMA Standards.
Standard voltages:
- single-phase 230 V - up to 2,2 kW for 4” motors.
- three-phase 230 V; (5,5 kW excluded) 400 V for 4” motors.
- three-phase 400 V; 400/690 V for 6-8-10” motors.

Voltage tolerance : +6% / -10%.

In order to limit both current and torque at each starting, for rated motor powers equal to or higher than 7.5kW, one of the following types of starting is necessary: star/delta, soft starter, stator impedance or autotransformer.
Insulation class F for 4” motors, class E for 6-8” motors, PVC coated wire for 10” motors.
Motor suitable operation with frequency converter (4” single-phase excluded).
Protection IP 68.

Cable

Motor 230V - 50Hz - 1~	Section	Length
4CS 0,37 ÷ 2,2 kW	3x2 + 1G2 mm²	2 m

Motor 400V - 50Hz - 3 ~	Section	Length
4CS 0,37 ÷ 1,5 kW	3x2 + 1G2 mm²	2 m
4CS 2,2 ÷ 5,5 kW	3x2 + 1G2 mm²	3 m
6CS-R 4 ÷ 11 kW	3 x (1x2,5) mm²	3,5 m
6CS-R 13 ÷ 22 kW	3 x (1x4) mm²	3,5 m
6CS-R 26 - 30 kW	3 x (1x6) mm²	3,5 m
6CS-R 37 - 45 kW	3 x (1x10) mm²	3,5 m
8CS-R 30 ÷ 45 kW	3 x (1x16) mm²	4 m
8CS-R 51 - 92 kW	3 x (1x25) mm²	4 m
10CS 85 kW	4G25 mm²	6 m
10CS 110-130 kW	4G35 mm²	6 m

Motor 400/690V - 50Hz - 3 ~ Y/Δ	Section	Length
10CS 150 kW	3x25 + 4G25 mm²	6 m
10CS 185 kW	3x35 + 4G35 mm²	6 m

Materiales

Components	4”	
External frame	Cr-Ni steel AISI 304	
Motor flange	Cr-Ni steel AISI 304	
Shaft end	Cr-Ni-Mo steel AISI 316	
Thrust bearing	Oil wetted	
Components	**6”, 8”, 10” standard**	**6”, 8”, 10” AISI 316**
External frame	AISI 304 (AISI 316Ti for 10”)	Cr-Ni-Mo steel AISI 316
Motor flange	Cast iron GJL 200 EN 1561	Cr-Ni-Mo steel AISI 316
Shaft end	Cr-Ni steel AISI 431 (AISI 329 for 10”)	AISI 316 (AISI 630 from 30 to 93kW) (AISI 429 for 10”)
Thrust bearing	Oscillating pads	Oscillating pads
Bushings	Graphite (Bronze for 8”)	Graphite (Bronze for 8”)

Special features on request

- Other voltage. - Frequency 60 Hz.
- Higher liquid temperature.

Encapsulated motor FK series

Operating conditions

Motor	Max. Liquid temperature	Cooling minimum flow velocity	Max. starts per hour
4FK	30 °C	0,08 m/s	20
6FK	30 °C for 4 ÷ 30 kW 50 °C for 37 ÷ 45 kW	0,16 m/s	20
8FK	30 °C	0,16 m/s	10

Continuous duty.

Operation data

2-pole induction motor, 50 Hz (n ≈ 2900 rpm).
Sized for connection to the pumps according to NEMA Standards.
Standard voltages:
- single-phase 230 V - up to 2,2 kW for 4” motors.
- three-phase 230 V; 400 V for 4” motors.
- three-phase 400 V; 400/690 V for 6-8” motors.

Voltage tolerance : +6% / -10%.

In order to limit both current and torque at each starting, for rated motor powers equal to or higher than 7.5kW, one of the following types of starting is necessary: star/delta, soft starter, stator impedance or auto-transformer.

Insulation class B for 4” motors, class F for 6”-8” motors.
Protection IP 68.
Motor suitable operation with frequency converter.

Cable

Motor 230V - 50Hz - 1~	Section	Length
4FK 0,37 ÷ 2,2 kW	3x1,5 + 1G1,5 mm²	1,5 m

Motor 400V - 50Hz - 3 ~	Section	Length
4FK 0,37 ÷ 1,5 kW	3x1,5 + 1G1,5 mm²	1,5 m
4FK 2,2 ÷ 5,5 kW	3x1,5 + 1G1,5 mm²	2,5 m
6FK 4 ÷ 22 kW	4 G 4 mm²	4 m
6FK 30 - 45 kW	3x8,4 + 1G8,4 mm²	4 m
8FK 30 ÷ 45 kW	3x8,4 + 1G8,4 mm²	8 m
8FK 55 ÷ 93 kW	3 x (1x16) mm²	8 m
8FK 110 ÷ 150 kW	3 x (1x35) mm²	8 m

Materiales

Components	4” standard	4” AISI 316
External frame	Cr-Ni steel AISI 304	Cr-Ni-Mo steel AISI 316Ti
Motor flange	Cr-Ni steel AISI 304	Cr-Ni-Mo steel AISI 316L
Shaft end	Cr-Ni steel AISI 303	Cr-Ni-Mo steel AISI 329
Thrust bearing	Oscillating pads	Oscillating pads
Components	**6”, 8” standard**	**6”, 8” AISI 316**
External frame	Cr-Ni steel AISI 304	Cr-Ni-Mo steel AISI 316 Ti
Supports	Cast iron GJL 200 EN 1561	Cr-Ni-Mo steel AISI 316
Shaft end	Cr-Ni steel AISI 304 (AISI 303 for 8”)	Cr-Ni-Mo steel AISI 316 (AISI 630 for 8”)
Thrust bearing	Oscillating pads	Oscillating pads

Special features on request

- Other voltage.
- Frequency 60 Hz.
- Higher liquid temperature.

CALPEDA ROMANIA - INFINITY PUMPS SRL
Tel: 0268.33.47.47 / 0722.244.944
vanzari@calpeda.ro | www.calpeda.ro

CS, CS-R

Submersible motors

Performance, dimensions and weights

4"CS - 1 ~

Type	PN kW	PN HP	IN 230 V A	Power factor cos φ 4/4	3/4	2/4	Efficiency η % 4/4	3/4	2/4	R.P.M.	Direct start IA/IN	CA/CN	Capacitor 450 Vc μF	Axial thrust N	M mm	Weight kg
4CS 0,37M	0,37	0,5	3.2	0.96	0.93	0.85	53	46	29	≈ 2850	3.8	0.78	16	1500	327	7,6
4CS 0,55M	0,55	0,75	4.0	0.99	0.97	0.89	62	54	35		4.6	0.80	25		362	9,4
4CS 0,75M	0,75	1	5.6	0.98	0.99	0.99	62	55	36		4.2	0.81	35		402	10,7
4CS 1,1M	1,1	1,5	8.4	0.97	0.93	0.83	61	55	36		4.2	0.81	40		447	12,4
4CS 1,5M	1,5	2	11.2	0.99	0.97	0.89	64	59	39		3.9	0.75	60		467	13,5
4CS 2,2M	2,2	3	14.7	0.96	0.93	0.80	67	64	44		4.2	0.51	70		517	15,7

Connection
4" NEMA

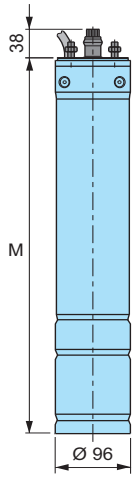

4"CS - 3 ~

Type	PN kW	PN HP	IN 400 V A	Power factor cos φ 4/4	3/4	2/4	Efficiency η % 4/4	3/4	2/4	R.P.M.	Direct start IA/IN	CA/CN	Axial thrust N	M mm	Weight kg
4CS 0,37T	0,37	0,5	1.2	0.72	0.64	0.47	63	58	44	≈ 2850	5.6	4.2	1500	327	7,7
4CS 0,55T	0,55	0,75	1.5	0.79	0.71	0.53	68	66	52		6.1	4.10		347	8,7
4CS 0,75T	0,75	1	2.0	0.77	0.69	0.48	74	71	58		5.7	4.02		362	9,9
4CS 1,1T	1,1	1,5	2.9	0.78	0.69	0.48	75	73	60		5.7	3.95		402	10,8
4CS 1,5T	1,5	2	4.2	0.73	0.64	0.44	72	70	55		5.9	4.58		447	12,6
4CS 2,2T	2,2	3	5.5	0.81	0.71	0.47	72	73	62		4.9	2.2		402	11,7
4CS 3T	3	4	7,4	0,81	0,72	0,56	73,5	73,5	69		5,7	2,16	4500	481	14,9
4CS 4T	4	5,5	9,4	0,82	0,74	0,60	74,5	75	71		6,3	2,19		546	18,2
4CS 5,5T	5,5	7,5	13	0,81	0,72	0,57	76	76	71		7,8	3,44		646	23

6"CS-R, I-6"CS-R

Type Standard	Type AISI 316	PN kW	PN HP	IN 400 V A	Power factor cos φ 4/4	3/4	Efficiency η % 4/4	3/4	R.P.M.	Direct start IA/IN	CA/CN	Axial thrust N	M mm	Weight kg
6CS-R 4	**I-6CS-R 4**	4	5,5	11	0,80	0,70	70	68	2825	3	1,5	30000	530	30,5
6CS-R 5,5	**I-6CS-R 5,5**	5,5	7,5	14,5	0,81	0,72	72	72	2815	3,2	1,5	30000	550	33
6CS-R 7,5	**I-6CS-R 7,5**	7,5	10	18,5	0,80	0,72	76	76	2830	4,1	2	30000	595	38
6CS-R 9,2	**I-6CS-R 9,2**	9,2	12,5	22	0,80	0,71	78	78	2840	4	1,7	30000	640	41,7
6CS-R 11	**I-6CS-R 11**	11	15	26	0,83	0,76	78	79	2835	5,2	2,5	30000	670	44,4
6CS-R 13	**I-6CS-R 13**	13	17,5	31	0,80	0,69	79	78	2840	5	2,6	30000	700	47,7
6CS-R 15	**I-6CS-R 15**	15	20	35	0,80	0,72	81	81	2855	5	1,95	30000	715	52
6CS-R 18,5	**I-6CS-R 18,5**	18,5	25	42	0,82	0,74	81	82	2840	5,4	2,5	30000	750	56
6CS-R 22	**I-6CS-R 22**	22	30	49,5	0,83	0,76	81	83	2820	4,5	1,7	30000	790	59,8
6CS-R 26	**I-6CS-R 26**	26	35	57,5	0,82	0,74	83	84	2850	5,3	2	30000	875	70
6CS-R 30	**I-6CS-R 30**	30	40	64,6	0,80	0,74	85	87	2845	5,3	2	30000	1025	85,7
6CS-R 37	**I-6CS-R 37**	37	50	82,5	0,80	0,72	86	87	2870	6	2,4	30000	1227	111
6CS-R 45	**I-6CS-R 45**	45	60	98,9	0,80	0,73	85	85	2860	5,1	2	30000	1287	119

Connection
6" NEMA

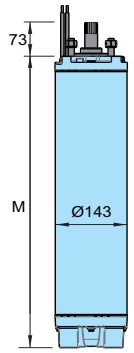

8"CS-R, I-8"CS-R

Type Standard	Type AISI 316	PN kW	PN HP	IN 400 V A	Power factor cos φ 4/4	3/4	Efficiency η % 4/4	3/4	R.P.M.	Direct start IA/IN	CA/CN	Axial thrust N	M mm	Weight kg
8CS-R 30	**I-8CS-R 30**	30	40	63	0,85	0,82	83	84	2900	5,5	1,8	60000	1039	143
8CS-R 37	**I-8CS-R 37**	37	50	81,5	0,82	0,77	85	86	2905	5,9	1,8	60000	1094	155
8CS-R 45	**I-8CS-R 45**	45	60	91	0,84	0,79	86	86	2905	5,85	1,9	60000	1174	171,5
8CS-R 51	**I-8CS-R 51**	51	70	104	0,84	0,81	86	87	2905	6	1,9	60000	1269	192
8CS-R 59	**I-8CS-R 59**	59	80	119	0,84	0,81	87	87	2910	6,2	2	60000	1374	210
8CS-R 66	**I-8CS-R 66**	66	90	133	0,83	0,81	88	88	2905	6,1	2	60000	1409	219
8CS-R 75	**I-8CS-R 75**	75	100	147	0,85	0,83	88	88	2895	5,9	2	60000	1479	234,5
8CS-R 92	**I-8CS-R 92**	92	125	181	0,84	0,81	88	88	2905	6,3	2,1	60000	1664	264,5

Connection
8" NEMA

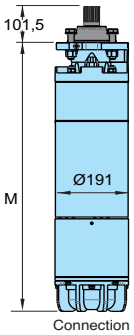

10"CS, I-10"CS

Type Standard	Type AISI 316	PN kW	PN HP	IN 400 V A	Power factor cos φ 4/4	3/4	2/4	Efficiency η % 4/4	3/4	2/4	R.P.M.	Direct start IA/IN	CA/CN	Axial thrust N	M mm	Weight kg
10CS 85	**I-10CS 85**	85	115	174	0,85	0,81	0,72	85	85	83	≈ 2900	4,7	1,1	60000	1419	280
10CS 110	**I-10CS 110**	110	150	232	0,82	0,76	0,65	86	86	84		5	1,3		1529	315
10CS 130	**I-10CS 130**	130	175	256	0,86	0,82	0,74	88	88	87		5,3	1,3		1656	362
10CS 150	**I-10CS 150**	150	200	298	0,85	0,81	0,73	87	88	86		5,3	1,3		1769	413
10CS 185	**I-10CS 185**	185	250	384	0,81	0,75	0,64	88	88	86		5,6	1,7		1919	449

Connection
8" NEMA

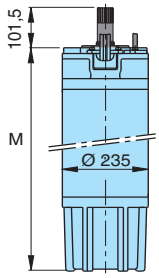

PN Rated power output IN Rated current $\frac{I_A}{I_N}$ Starting current / Nominal current $\frac{C_A}{C_N}$ Starting torque/Nominal torque

CALPEDA ROMANIA - INFINITY PUMPS SRL
Tel: 0268.33.47.47 / 0722.244.944
vanzari@calpeda.ro | www.calpeda.ro

FK, I-FK

Submersible motors

Performance, dimensions and weights

4FK - 1 ~

Type	PN kW	PN HP	IN 230 V A	Power factor cos φ 4/4	3/4	2/4	Efficiency η % 4/4	3/4	2/4	R.P.M.	Direct start IA/IN	CA/CN	Capac. 450 Vc µF	Axial thrust N	M mm	Weight kg
4FK 0,37M	0,37	0,5	3,3	0,91	0,85	0,78	54	46	35	2860	3,8	0,94	16	4000	251	7,2
4FK 0,55M	0,55	0,75	4,3	0,94	0,91	0,86	63	57	45	2850	4,1	0,86	20		276	8,4
4FK 0,75M	0,75	1	5,7	0,98	0,96	0,92	59	52	41	2845	4	1	35		297	9,3
4FK 1,1M	1,1	1,5	8,4	0,92	0,86	0,77	63	56	43	2845	4	0,84	40		321	10,5
4FK 1,5M	1,5	2	10,7	0,95	0,90	0,82	66	59	48	2830	3,9	0,76	50		353	11,9
4FK 2,2M	2,2	3	14,7	0,97	0,93	0,86	68	62	51	2840	4,2	0,74	70		451	16,7

Connection
4" NEMA

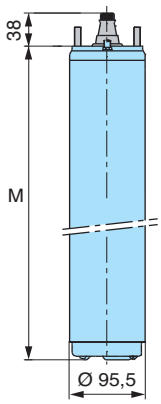

I-4FK, 4FK - 3 ~

Type	PN kW	PN HP	IN 400 V A	Power factor cos φ 4/4	3/4	2/4	Efficiency η % 4/4	3/4	2/4	R.P.M.	Direct start IA/IN	CA/CN	Axial thrust N	M mm	Weight kg
I-4FK, 4FK 0,37T	0,37	0,5	1,1	0,74	0,66	0,55	66	63	54	2870	4,92	2,5	4000	237	5,6
I-4FK, 4FK 0,55T	0,55	0,75	1,6	0,74	0,65	0,53	68	63	55	2870	4,63	2,31		251	6,4
I-4FK, 4FK 0,75T	0,75	1	2	0,77	0,68	0,55	70	68	61	2865	3,5	2,69		271	7,3
I-4FK, 4FK 1,1T	1,1	1,5	2,8	0,78	0,69	0,57	74	72	66	2850	5,71	3,09		297	8,6
I-4FK, 4FK 1,5T	1,5	2	3,9	0,78	0,68	0,55	73	71	65	2855	5,31	2,82		321	9,6
I-4FK, 4FK 2,2T	2,2	3	5,5	0,77	0,66	0,52	75	74	69	2845	5,42	2,99		353	11,1
I-4FK, 4FK 3T	3	4	7,5	0,77	0,67	0,53	76	76	70	2845	5,6	3,17		408	13,6
I-4FK, 4FK 3,7T	3,7	5	9	0,78	0,69	0,54	78	77	73	2840	5,81	3,32	6500	520	19,1
I-4FK, 4FK 4T	4	5,5	9,9	0,77	0,67	0,52	78	77	72	2840	5,76	3,28		543	20
I-4FK, 4FK 5,5T	5,5	7,5	12,6	0,81	0,73	0,59	79	79	75	2865	6,13	3,09		653	26,6
I-4FK, 4FK 7,5T	7,5	10	17,1	0,81	0,72	0,58	79	79	75	2855	5,81	2,91		731	30,6

I-6FK, 6FK - 3 ~

Connection
6" NEMA

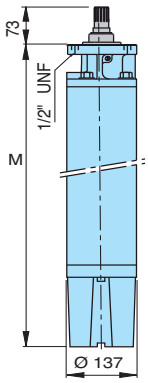

Type	PN kW	PN HP	IN 400 V A	Power factor cos φ 4/4	3/4	2/4	Efficiency η % 4/4	3/4	2/4	R.P.M.	Direct start IA/IN	CA/CN	Axial thrust N	M mm	Weight kg
I-6FK, 6FK 4	4	5,5	9,3	0,82	0,74	0,62	78	77	74	2860	4,6	1,5	15500	581	41,3
I-6FK, 6FK 5,5	5,5	7,5	12,5	0,82	0,75	0,63	79	78	74	2870	5,1	1,9		615	44,9
I-6FK, 6FK 7,5	7,5	10	16	0,86	0,81	0,70	79	78	75	2860	5,2	1,9		646	49,0
I-6FK, 6FK 9,2	9,2	12,5	20,7	0,80	0,72	0,58	81	81	78	2870	5,4	2,2		679	50,3
I-6FK, 6FK 11	11	15	23,3	0,85	0,79	0,68	81	81	78	2860	5,5	2,1		711	54,7
I-6FK, 6FK 15	15	20	31,3	0,85	0,80	0,70	81	81	79	2860	5,4	2,1		776	60,5
I-6FK, 6FK 18,5	18,5	25	38,5	0,85	0,79	0,68	82	82	80	2850	6	2,5		842	67,1
I-6FK, 6FK 22	22	30	45,3	0,86	0,81	0,71	83	83	81	2860	5,9	2,4		907	73,1
I-6FK, 6FK 30	30	40	63,5	0,84	0,79	0,67	83	83	80	2860	6,2	2,6	27500	1037	88,7
I-6FK, 6FK 37	37	50	77,9	0,85	0,78	0,68	81	80	76	2870	5,2	2,3	45000	1477	140
I-6FK, 6FK 45	45	60	93,9	0,84	0,79	0,72	82	80	77	2870	5,3	2,2		1629	156

I-8FK, 8FK - 3 ~

Connection
8" NEMA

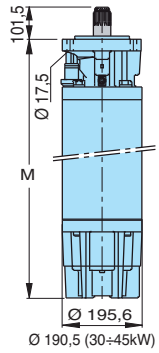

Type	PN kW	PN HP	IN 400 V A	Power factor cos φ 4/4	3/4	2/4	Efficiency η % 4/4	3/4	2/4	R.P.M.	Direct start IA/IN	CA/CN	Axial thrust N	M mm	Weight kg
I-8FK, 8FK 30	30	40	61	0,84	0,78	0,68	86	86	83	2900	6,85	2,6	45000	925	145
I-8FK, 8FK 37	37	50	74	0,86	0,81	0,71	87	87	84	2920	7,2	2,4		1000	157
I-8FK, 8FK 45	45	60	89	0,85	0,81	0,71	87	87	85	2920	7,25	2,7		1077	172
I-8FK, 8FK 55	55	75	108	0,87	0,82	0,72	88	87	85	2920	8	3,1		1264	227
I-8FK, 8FK 75	75	100	151	0,87	0,82	0,72	87	87	85	2925	8	2,3		1455	265
I-8FK, 8FK 92	92	125	190	0,83	0,78	0,68	87	86	84	2930	7	1,9		1747	318
I-8FK, 8FK 110	110	150	222	0,84	0,80	0,70	88	87	85	2930	7,2	2,1		1976	381
I-8FK, 8FK 130	130	175	252	0,87	0,84	0,79	88	87	86	2920	6,9	2,2		2179	420
I-8FK, 8FK 150	150	200	284	0,88	0,86	0,79	88	88	86	2920	6,54	2,1		2408	429

PN Rated power output IN Rated current IA/IN Starting current / Nominal current CA/CN Starting torque/Nominal torque

CALPEDA ROMANIA - INFINITY PUMPS SRL
Tel: 0268.33.47.47 / 0722.244.944
vanzari@calpeda.ro | www.calpeda.ro

CS, CS-R, FK

Submersible motors

Maximum length of electric cables

IN A	**230** Volt - 50 Hz - 1 ~				
	1 four-wires cable **4** x **....mm²**				
	1,5	**2,5**	**4**	**6**	**10**
	cables max m				
2	142	235			
4	71	118	189		
6	47	78	126	189	
8	35	59	94	142	231
10	28	47	76	113	185
12	24	39	63	95	154
14	20	34	54	81	132
16	18	29	47	71	115
18		26	42	63	103
20		24	38	57	92
25			30	45	74
30			25	38	62

Voltage drop 3%.
Maximum ambient temperature + 30 °C.

Direct-starting

IN A	**230** Volt - 50 Hz - 3 ~												
	1 four-wires cable **4** x **....mm²**								4 cables **1** x **....mm²**				
	1,5	**2,5**	**4**	**6**	**10**	**16**	**25**	**35**	**50**	**70**	**95**	**120**	**150**
	cables max m												
2	164	272											
4	82	136	218										
6	55	91	145	218									
8	41	68	109	164	267								
10	33	54	87	131	213								
12	27	45	73	109	178								
14	23	39	62	94	152	239							
16	20	34	55	82	133	209							
18		30	48	73	118	186							
20		27	44	65	107	167	257						
25			35	52	85	134	206						
30			29	44	71	111	171	233					
35				37	61	95	147	200					
40				33	53	83	129	175	227				
45					47	74	114	155	202				
50					43	67	103	140	181	249			
60						56	86	116	151	207			
70						48	73	100	130	178	230		
80							64	87	113	155	201	241	
90							57	78	101	138	179	214	
100							51	70	91	124	161	193	224
110								64	82	113	146	175	203
120								58	76	104	134	161	186
130									70	96	124	148	172
140									65	89	115	138	160
150									60	83	107	128	149
160									57	78	101	120	140
170									53	73	95	113	132
180									50	69	89	107	124
190									48	65	85	101	118
200									45	62	81	96	112
220										57	73	88	102
240										52	67	80	93
260											62	74	86
280											58	69	80
300											54	64	75

IN A	**400** Volt - 50 Hz - 3 ~														
	1 four-wires cable **4** x **....mm²**								4 cables **1** x **....mm²**						
	1,5	**2,5**	**4**	**6**	**10**	**16**	**25**	**35**	**50**	**70**	**95**	**120**	**150**	**185**	**240**
	cables max m														
2	285	473													
4	143	236	379												
6	95	158	253												
8	71	118	190	285											
10	57	95	152	228											
12	48	79	126	190	309										
14	41	68	108	163	265										
16	36	59	95	142	232										
18		53	84	127	206	323									
20		47	76	114	185	290									
25			61	91	148	232	358								
30			51	76	124	194	298								
35				65	106	166	256	347							
40				57	93	145	224	304							
45					82	129	199	270							
50					74	116	179	243	316						
60						97	149	203	263						
70						83	128	174	225	309					
80							112	152	197	270					
90							99	135	175	240	311				
100							89	122	158	216	280				
110								110	143	197	255	305			
120								101	132	180	233	279			
130									121	166	216	258	299		
140									113	155	200	239	278		
150									105	144	187	223	259	302	
160									99	135	175	209	243	283	
170									93	127	165	197	229	267	
180									88	120	156	186	216	252	297
190									83	114	147	176	205	239	281
200									79	108	140	168	195	227	267
220										98	127	152	177	206	243
240										90	117	140	162	189	223
260											108	129	150	174	206
280											100	120	139	162	191
300											93	112	130	151	178

CALPEDA ROMANIA - INFINITY PUMPS SRL
Tel: 0268.33.47.47 / 0722.244.944
vanzari@calpeda.ro | www.calpeda.ro

CS, CS-R, FK

Submersible motors

Maximum length of electric cables

Star-delta starting

In A	**230** Volt - 50 Hz - 3 ~ Y/Δ												
	2 four-wires cables **4** G **....mm²**								7 cables **1** x **....mm²**				
	1,5	**2,5**	**4**	**6**	**10**	**16**	**25**	**35**	**50**	**70**	**95**	**120**	**150**
	cables max m												
30	19	31	50	76	123	193							
35		27	43	65	105	165							
40		24	38	57	92	144							
45		21	34	50	82	128	198						
50			30	45	74	116	178						
60				38	62	96	148	201					
70				32	53	83	127	173	224				
80					46	72	111	151	196				
90					41	64	99	134	174				
100						58	89	121	157	215			
110						53	81	110	143	196			
120						48	74	101	131	179			
130						44	68	93	121	166	214		
140							64	86	112	154	199		
150							59	81	105	143	186		
160							56	76	98	134	174	208	
170							52	71	92	127	164	196	
180								67	87	120	155	185	
190								64	83	113	147	175	204
200									78	108	139	167	194
220										98	127	152	176
240										90	116	139	161
260										83	107	128	149
280										77	100	119	138
300										72	93	111	129

In A	**400** Volt - 50 Hz - 3 ~ Y/Δ												
	2 four-wires cables **4** G **....mm²**								7 cables **1** x **....mm²**				
	1,5	**2,5**	**4**	**6**	**10**	**16**	**25**	**35**	**50**	**70**	**95**	**120**	**150**
	cables max m												
30	33	55	88	131	214	335							
35		47	75	113	183	287							
40		41	66	99	160	251							
45			58	88	143	223	344						
50			53	79	128	201	310						
60				66	107	167	258	350					
70				56	92	144	221	300					
80					80	126	193	263	341				
90					71	112	172	234	303				
100					64	100	155	210	273	374			
110					58	91	141	191	248	340			
120						84	129	175	228	312			
130						77	119	162	210	288	373		
140							111	150	195	267	346		
150							103	140	182	249	323		
160							97	131	171	234	303	362	
170								124	161	220	285	341	
180								117	152	208	269	322	
190								111	144	197	255	305	354
200									137	187	242	290	337
220										170	220	264	306
240										156	202	242	280
260											186	223	259
280											173	207	240
300											162	193	224

- Against short-circuits and overloads to the electric pumps system we advise to follow the usually applied normative.
- To avoid a possible dry working of the electric pump in is better to install a level control.
- In order to avoid overheatings, tension grops above 3%, we advise to use suitable starting motors systems.
- All the cable wave to respect the usually applied normative and to present excellent insullation characteristics.

The tables show the maximum length of the cable depending on the current absorbed by the motor and the cross section area of the cable, at different voltages. The maximum voltage drop equal to 3%, cable temperature of 80°C, water installation similar to air installation at a temperature of 30°C.

CALPEDA ROMANIA - INFINITY PUMPS SRL
Tel: 0268.33.47.47 / 0722.244.944
vanzari@calpeda.ro | www.calpeda.ro

Choice of electric cable by calculation

For dimensioning the phase cross section area for the submersible motor need the following information:

- V: Rated voltage (V)
- I: Motor current (A)
- L: Length of cable (km)
- cos φ: power factor
- Ambient temperature (°C)

The choice of the minimum cross section area of the phase conductor is determined by the rated motor current and the values reported in Table 1.

Table 1

Type of cable*	Cable cross section mm²	Maximum cable current 1 Ader A [1]	Maximum cable current 1 Ader A [2]	Maximum cable current 2 Ader A [3]	Resistance R at 80°C ohm/km [4]	Reactance X at 50Hz ohm/km [4]
four-wires cable	1.5	18		15	15.1	0,142
four-wires cable	2.5	24		20	9.08	0,131
four-wires cable	4	32		27	5.63	0,121
four-wires cable	6	41		35	3.73	0,115
four-wires cable	10	57		48	2.27	0,103
four-wires cable	16	76		65	1.43	0,098
four-wires cable	25	96		82	0.91	0,097
four-wires cable	35		119	101	0.65	0,094
single-wire cable	50		167	142	0.473	0,121
single-wire cable	70		216	184	0.328	0,116
single-wire cable	95		264	224	0.236	0,118
single-wire cable	120		308	262	0.188	0,113
single-wire cable	150		356	303	0.153	0,112
single-wire cable	185		409	348	0.123	0,109
single-wire cable	240		485	412	0.094	0,110

[1] IEC 60364-5-52:2009 Tab.B52.4 / C
[2] IEC 60364-5-52:2009 Tab.B52.6
[3] 1)x0,85 IEC 60364-5-52:2009 Tab.B52.17 ITEM2
[4] UNEL 35023-70

* Up to 35 mm² sections four-wire cable are used, from 50 mm² single core cables are recommended as well.Tab.1

The maximum current of the cables listed in Table 1 are for ambient temperature of 30 ° C.
When the temperature is different, the maximum current of the cables should be corrected by a factor given in Table 2.

Table 2 (IEC 60364-5-52:2009 Tab.B.52.14)

Ambient Temperature °C	10	15	20	25	30	35	40	45	50	55	60
Correction factor	1,22	1,17	1,12	1,06	1	0,94	0,87	0,79	0,71	0,61	0,5

The cross section area of the phase conductor is choosen by checking the voltage drop along the line , through the following equation:

$$DU\% = 1{,}73 * I * L * (R * \cos\varphi + X * \mathrm{sen}\,\varphi)/(V * 1000)$$

DU% the voltage drop should not be greater than 3%
R, X = cable resistance and reactance in ohms/km (indicated in Table 1)
$\mathrm{sen}\varphi = \sqrt{1-(\cos\varphi)^2}$

In case of star / delta starting the rated current of the motor should be divided by 1.73.

Determination of minimal sections of the protective conductor PE.

Table 3 (CEI 64-8:2007 Tab.54F)

Phase cross section area S mm²	PE cross section area S_{PE} mm²
S ≤ 16	S
16 < S ≤ 25	16
S > 25	S/2

CALPEDA ROMANIA - INFINITY PUMPS SRL
Tel: 0268.33.47.47 / 0722.244.944
vanzari@calpeda.ro | www.calpeda.ro

CS, CS-R, FK

Submersible motors

Electric control panels

M COMP Control panel for 1 single-phase submersible pump

LVBT

Type	Protector max **A**	Capacitor **450Vc**	Motor 230V - 1~ **kW**	Dimensions HxBxP mm
M COMP 4-16	4,5	16 µF	0,37	220x210x110
M COMP 4-20	4,5	20 µF	0,55	220x210x110
M COMP 5-20	5	20 µF	0,55	220x210x110
M COMP 5-25	5	25 µF	0,55	220x210x110
M COMP 6-20	6	20 µF	0,75	220x210x110
M COMP 6-35	6	35 µF	0,9	220x210x110
M COMP 7-25	7	25 µF	0,9	220x210x110
M COMP 7-30	7	30 µF	0,9	220x210x110
M COMP 8-25	8	25 µF	1,1	220x210x110
M COMP 8-30	8	30 µF	1,1	220x210x110
M COMP 10-35	10	35 µF	1,1	220x210x110
M COMP 10-40	10	40 µF	1,1	220x210x110
M COMP 12-35	12	35 µF	1,5	220x210x110
M COMP 12-50	12	50 µF	1,5	220x210x110
M COMP 12-60	12	60 µF	1,5	220x210x110
M COMP 16-70	16	70 µF	2,2	220x210x110

Construction

Control panel with ON-OFF switch and capacitor for 1 submersible pump with single-phase motor.
Suitable for use with LVBT board for level control.
Protection is provided by means of a main bipolar switch with a phase protected against overload by means of a thermal element.

PFC-M Control panel for 1 submersible pump with single-phase motor, PF control

Type	Setting **A**	Capacitor **450Vc**	Motor 50/60Hz 220V-240V - 1~ **kW**	Dimensions HxBxP mm
PFC-M 18-16	1 - 18	16 µF	0,37	220x210x110
PFC-M 18-20	1 - 18	20 µF	0,55	220x210x110
PFC-M 18-25	1 - 18	25 µF	0,55	220x210x110
PFC-M 18-30	1 - 18	30 µF	0,75	220x210x110
PFC-M 18-35	1 - 18	35 µF	0,75	220x210x110
PFC-M 18-40	1 - 18	40 µF	1,1	220x210x110
PFC-M 18-50	1 - 18	50 µF	1,5	220x210x110
PFC-M 18-60	1 - 18	60 µF	1,5	220x210x110
PFC-M 18-70	1 - 18	70 µF	2,2	220x210x110

Construction

Control panel for controlling one submersible pump with single-phase motor.
Electronic control of the operation and dry-running protection through the power factor (PF) control.
The installation of level probes into the well is not required.
It stops the pump in case of lack of air cushion in the pressure vessel (patented system).
Displayed operating data and alarms available in four languages.

QML/A 1 D Control panel for 1 pump with single-phase motor, direct starting

Type	Motor 230V - 1~ **kW**	Setting **A**	Dimensions *HxBxP mm*
QML/A 1 D 12A-FA	0,25 - 1,5	1 - 12	250x205x115
QML/A 1 D 12A-FA 20	0,25 - 1,5	1 - 12	250x205x115
QML/A 1 D 12A-FA 25	0,25 - 1,5	1 - 12	250x205x115
QML/A 1 D 3 FT	2,2 - 3	13 - 18	400x300x160

Construction

Control panel for 1 pump with single-phase motor, direct starting for pressure booster sets, with a patented working time-measuring system that stops the pump in case of lack of air cushion in the pressure vessel.
Arranged for the capacitor internal connection (for pumps without built-in capacitor).
Pump operation controlled by an electronic board type MPS 3000 with microprocessor which allows three different modes of operation of the pump: standard, emergency and timed.

T COMP Control panel for 1 submersible pump with three-phase motor

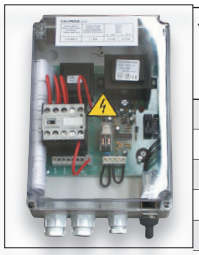

Type	Protector **A**	Motor 230V - 3~ **kW**	Motor 400V - 3~ **kW**	Dimensions HxBxP *HxBxP mm*
T COMP 8	1 ÷ 8	0,37 ÷ 1,5	0,5 ÷ 2,2	170x145x85
T COMP 10	7 ÷ 10	---	3 ÷ 3,7	230x180x155
T COMP 12	9 ÷ 12	2,2	4	230x180x155
T COMP 16	11 ÷ 16	3	5,5	230x180x155
T COMP 20	14 ÷ 20	3,7 - 4	7,5	230x180x155

Construction

Control panel and protection for 1 submersible pump with three-phase motor.
Arranged for the LVBT level control internal connection against dry running (T COMP8 model has the level control as a standard).
Control pumps with pressure switch and float-type switch.

CALPEDA ROMANIA - INFINITY PUMPS SRL
Tel: 0268.33.47.47 / 0722.244.944
vanzari@calpeda.ro | www.calpeda.ro

CS, CS-R, FK

Submersible motors

Electric control panels

PFC-T Control panel for 1 submersible pump with three-phase motor, PF control

Type	Motor 400V - 3~ kW	Setting A	Dimensions HxBxP mm
PFC-T 16/A	0,37 - 5,5	1 - 16	250x205x105

Construction

Control panel for controlling 1 submersible pump with three-phase motor. Electronic control of the operation and dry-running protection through the power factor (PF) control.
The installation of level probes into the well is not required.
It stops the pump in case of lack of air cushion in the pressure vessel (patented system) Displayed operating data and alarms, available in four languages.

QTL/A 1 D Control panel for 1 pump with three-phase motor, direct starting

Type	Motor 400V - 3~ kW	Setting A	Dimensions HxBxP mm
QTL/A 1 D 12A-FA	0,25 - 5,5	1 - 12	250x205x105
QTL/A 1 D 7,5 FT	7,5	13 - 18	400x300x160
QTL/A 1 D 9,2 FT	9,2	17 - 23	400x300x160
QTL/A 1 D 11 FT	11	20 - 25	400x300x160

Construction

Control panel for 1 pump with three-phase motor, direct starting for pressure booster sets, with a patented working time-measuring system that stops the pump in case of lack of air cushion in the pressure vessel.
Pump operation controlled by an electronic card type MPS 3000 with microprocessor which allows three different modes of operation of the pump: standard, emergency and timed.
Dry-running protection with float switch.

QTL 1 D FTE Control panel for 1 pump with three-phase motor, direct starting

Type	Motor 400V - 3~ kW	Setting A	Dimensions HxBxP mm
QTL 1 D 4 FTE	4	6,3 - 10	400x300x160
QTL 1 D 5,5 FTE	5,5	9 - 12	400x300x160
QTL 1 D 7,5 FTE	7,5	13 - 18	400x300x160
QTL 1 D 9,2 FTE	9,2	17 - 23	400x300x160
QTL 1 D 11 FTE	11	20 - 25	400x300x160
QTL 1 D 15 FTE	15	24 - 32	500x350x200
QTL 1 D 18,5 FTE	18,5	32 - 38	500x350x200
QTL 1 D 22 FTE	22	35 - 50	500x350x200
QTL 1 D 30 FTE	30	46 - 65	500x350x200

Construction

Electromechanical control panel for 1 pump with three-phase motor, direct starting.
Operating signals by E 1000 led card.
Dry-running protection with float switch.
Construction with SRLE level control for probes connection against dry-running on request .

QTL/A 1 ST FT Control panel for 1 pump with three-phase motor, Y/Δ starting

Type	Motor 400V - 3~ Power kW	Current A	Dimensions HxBxP mm
QTL/A 1 ST 5,5 FT	5,5	11 - 15	600x400x200
QTL/A 1 ST 7,5 FT	7,5	12 - 17	600x400x200
QTL/A 1 ST 11 FT	9,2 - 11	16 - 24	600x400x200
QTL/A 1 ST 15 FT	15	23 - 31	600x400x200
QTL/A 1 ST 18,5 FT	18,5	30 - 39	600x400x200
QTL/A 1 ST 22 FT	22	35 - 43	700x500x200
QTL/A 1 ST 30B FT	30	42 - 55	700x500x200
QTL/A 1 ST 30A FT	30	55 - 65	700x500x200
QTL/A 1 ST 37 FT	37	61 - 84	800x600x250
QTL/A 1 ST 45 FT	45	80 - 105	800x600x250

Construction

Control panel for 1 pump with three-phase motor, Y/Δ starting for pressure booster sets, with a patented working time-measuring system that stops the pump in case of lack of air cushion in the pressure vessel.
Pump operation controlled by an electronic card type MPS 3000 with microprocessor with different pump operating modes.
Dry-running protection with float switch or level control probes.

CALPEDA ROMANIA - INFINITY PUMPS SRL
Tel: 0268.33.47.47 / 0722.244.944
vanzari@calpeda.ro | www.calpeda.ro

CS, CS-R, FK

Submersible motors

Electric control panels

QTL 1 ST FTE Control panel for 1 pump with three-phase motor, Y/Δ starting

Type	Motor 400V - 3~ Power kW	Current A	Dimensions HxBxP mm
QTL 1 ST 5,5 FTE	5,5	11 - 15	500x350x200
QTL 1 ST 7,5 FTE	7,5	12 - 17	500x350x200
QTL 1 ST 11 FTE	9,2 - 11	16 - 24	500x350x200
QTL 1 ST 15 FTE	15	23 - 31	500x350x200
QTL 1 ST 18,5 FTE	18,5	30 - 39	500x350x200
QTL 1 ST 22 FTE	22	35 - 43	600x400x200
QTL 1 ST 30B FTE	30	42 - 55	600x400x200
QTL 1 ST 30A FTE	30	55 - 65	600x400x200
QTL 1 ST 37 FTE	37	61 - 84	700x500x200
QTL 1 ST 45 FTE	45	80 - 105	700x500x200
QTL 1 ST 55 FTE	55	100 - 125	700x500x200
QTL 1 ST 75 FTE	75	120 - 160	800x600x250
QTL 1 ST 92 FTE	92	140 - 198	800x600x250
QTL 1 ST 110 FTE	110	180 - 250	800x600x250

Construction

Electromechanical control panel for 1 pump with three-phase motor, Y/Δ starting.
Operating signals by E 1000 led board.
Dry-running protection with float switch.
Construction with SRLE level control for probes connection against dry-running on request .

QTL 1 SS E Control panel for 1 pump with three-phase motor, start/stop with soft starter

Type	Motor 400V - 3~ kW	Max current output max A	Dimensions HxBxP mm
QTL 1 SS 7,5 E	7,5	17	700x500x250
QTL 1 SS 15 E	9,2 - 11 - 15	30	700x500x250
QTL 1 SS 22 E	18,5 - 22	45	700x500x250
QTL 1 SS 30 E	26 - 30	60	900x600x300
QTL 1 SS 37 E	37	75	900x600x300
QTL 1 SS 45 E	45	85	900x600x300
QTL 1 SS 55 E	55	110	900x600x300
QTL 1 SS 63 E	63	125	1100x700x300
QTL 1 SS 75 E	75	142	1100x700x300
QTL 1 SS 90 E	90	190	1200x800x400
QTL 1 SS 132 E	110 - 132	245	1200x800x400

Construction

Control panel for 1 pump with three-phase motor, start/stop with soft starter.
Operating signals on E 1000 led board.
Application: control of submersible motor with great cable length and surface motors.
Dry-running protection with float switch.
Construction with SRLE level control for probes connection against dry-running on request .

QTL 1 IS FTE Control panel for 1 pump with three-phase motor, with Stator Impedence starter

Type	Motor 400V - 3~ Power kW	Current A	Dimensions HxBxP mm
QTL 1 IS 5,5 FTE-2RL	5,5	11 - 15	
QTL 1 IS 7,5 FTE-2RL	7,5	12 - 17	
QTL 1 IS 11 FTE-2RL	9,2 - 11	16 - 24	
QTL 1 IS 15 FTE-2RL	15	23 - 31	
QTL 1 IS 18,5 FTE-2RL	18,5	30 - 39	
QTL 1 IS 22 FTE-2RL	22	35 - 43	
QTL 1 IS 30 FTE-2RL	30	42- 65	
QTL 1 IS 37 FTE-2RL	37	61 - 84	
QTL 1 IS 45 FTE-2RL	45	80 - 105	
QTL 1 IS 55 FTE-2RL	55	100 - 125	
QTL 1 IS 75 FTE-2RL	75	120 - 160	
QTL 1 IS 92 FTE-2RL	92	140 - 198	
QTL 1 IS 110 FTE-2RL	110	180 - 250	

Construction

Electromechanical control panel for 1 submersible pump with three-phase motor, with Stator Impedence starter.
Operating signals on led board type E 1000.
Application : submersible motors control with great cable length.
Construction with SRLE level control for probes connection against dry-running .

CALPEDA ROMANIA - INFINITY PUMPS SRL
Tel: 0268.33.47.47 / 0722.244.944
vanzari@calpeda.ro | www.calpeda.ro

Electric control panels

QML 1 VFT Control panel for 1 pump with variable speed three-phase motor

Type	Motor 230V - 3~ **kW**	Max current output max **A**	Dimensions HxBxP mm
QML 1 VFT 0,4	0,37 - 0,45	2,4	500x350x200
QML 1 VFT 0,75	0,55 - 0,75	4,2	500x350x200
QML 1 VFT 1,5	1,1 - 1,5	7,5	500x350x200
QML 1 VFT 2,2	2,2	10	500x350x200

Construction

Single-phase mains supply control panel with frequency converter for 1 pump with three-phase variable speed motor, for constant pressure booster sets.
Arranged for SRL 3 level control application for probes connection against dry-running.
Pump operation controlled by an electronic board type MPS 4000 with microprocessor.

QTL 1 VFT Control panel for 1 pump with variable speed three-phase motor

Type	Motor 400V - 3~ **kW**	Max current output max **A**	Dimensions HxBxP mm
QTL 1 VFT 0,4	0,4	1,5	500x350x200
QTL 1 VFT 0,75	0,55 - 0,75	2,3	500x350x200
QTL 1 VFT 1,5	1,1 - 1,5	4,1	500x350x200
QTL 1 VFT 2,2	2,2	5,5	500x350x200
QTL 1 VFT 4	3 - 4	9,5	500x350x200
QTL 1 VFT 5,5	5,5	14,3	600x400x250
QTL 1 VFT 7,5	7,5	17	600x400x250
QTL 1 VFT 11	9,2 - 11	27,7	700x500x250
QTL 1 VFT 15	15	33	700x500x250
QTL 1 VFT 18,5	18,5	46,3	800x600x250
QTL 1 VFT 22	22	61,5	800x600x250
QTL 1 VFT 30	30	74,5	900x600x250
QTL 1 VFT 37	37	88	1100x700x300
QTL 1 VFT 45	45	106	1200x800x300
QTL 1 VFT 55	55	145	1200x800x300
QTL 1 VFT 75	75	173	1200x800x300

Construction

Control panel with frequency converter for 1 pump with three-phase variable speed motor, for constant pressure booster sets.
Arranged for SRL 3 level control application for probes connection against dry-running.
Pump operation controlled by an electronic board type MPS 4000 with microprocessor.

CALPEDA ROMANIA - INFINITY PUMPS SRL
Tel: 0268.33.47.47 / 0722.244.944
vanzari@calpeda.ro | www.calpeda.ro

CS, CS-R, FK

Submersible motors

Motor Cooling

To ensure a suitable cooling, water must be in touch with the motor casing with a minimum velocity according to the following table

Rewindable motor CS, CS-R series

Motor	Max. Liquid temperature	Cooling: minimum flow velocity	Max. starts per hour	Motor P2
4CS	35 °C	0,08 m/s	20	all types
6CS-R	30 °C	0,1 m/s	15	4÷11 kW
		0,2 m/s	15	13÷15 kW
	25 °C	0,2 m/s	15	18,5 kW
		0,2 m/s	13	22÷30 kW
	40 °C	0,1 m/s	13	37 kW
		0,3 m/s	6	45 kW
8CS-R	25 °C	0,3 m/s	10	30÷45 kW
			8	51÷75 kW
			6	92 kW
10CS	25 °C	0,50 m/s	10	all types

Encapsulated motor FK series

Motor	Max. Liquid temperature	Cooling minimum flow velocity	Max. starts per hour
4FK	30 °C	0,08 m/s	20
6FK	30 °C for 4 ÷ 30 kW 50 °C for 37 ÷ 45 kW	0,16 m/s	20
8FK	30 °C	0,16 m/s	10

For operation with higher temperatures, contact our Technical Sales Department

Cooling jacket

When the submersible motor is installed :

- below the well inlet points (**picture A**);
- in tanks, lakes, basins, etc… (**pictures B and C**)

an external jacket must be installed to create a cooling flow around the motor. Only in this way a safe operation can be assured avoiding any overheating which can damage the motor.

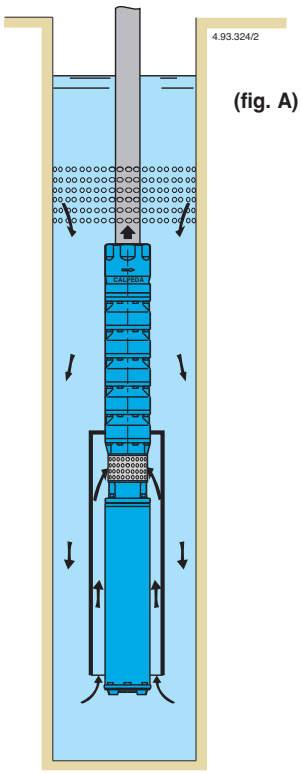

(fig. A)

(fig. B)

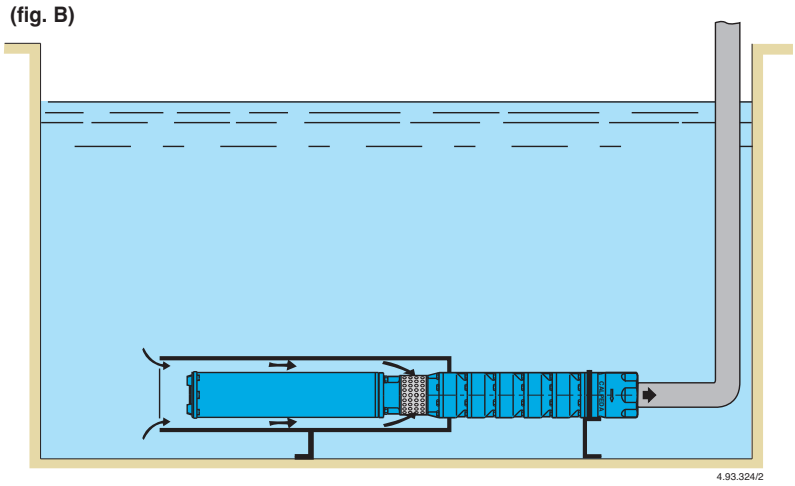

(fig. C)

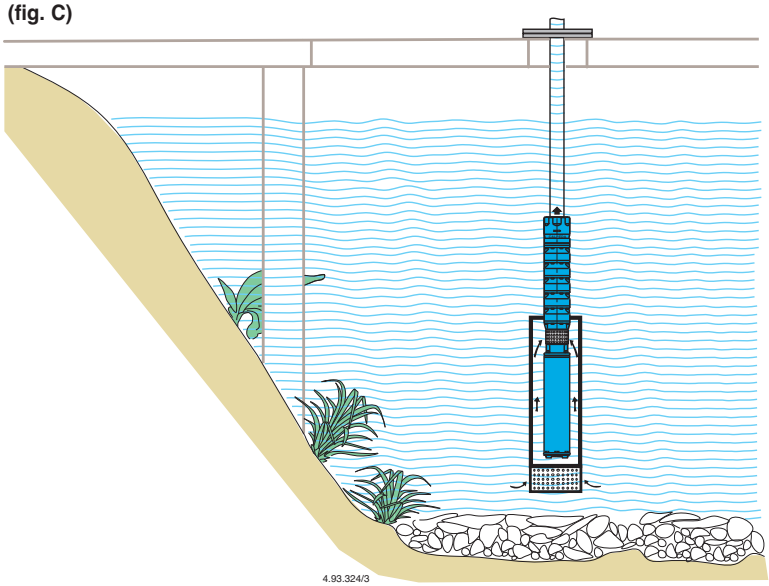

CALPEDA ROMANIA - INFINITY PUMPS SRL
Tel: 0268.33.47.47 / 0722.244.944
vanzari@calpeda.ro | www.calpeda.ro

NCE

Heating and conditioning

CALPEDA ROMANIA - INFINITY PUMPS SRL
Tel: 0268.33.47.47 / 0722.244.944
vanzari@calpeda.ro | www.calpeda.ro

calpeda

NCE EI

ErP READY 2015 — APPLIES TO EUROPEAN DIRECTIVE FOR ENERGY RELATED PRODUCTS

pag. 418

Energy saving circulating pumps

NCED HQ F

ErP READY 2015 — APPLIES TO EUROPEAN DIRECTIVE FOR ENERGY RELATED PRODUCTS

pag. 450

Energy saving circulating twin pumps with flanges

NCE H

ErP READY 2015 — APPLIES TO EUROPEAN DIRECTIVE FOR ENERGY RELATED PRODUCTS

pag. 422

Energy saving circulating pumps

NCE EL

ErP READY 2015 — APPLIES TO EUROPEAN DIRECTIVE FOR ENERGY RELATED PRODUCTS

pag. 454

Energy saving circulating pumps for solar systems

NCED H

ErP READY 2015 — APPLIES TO EUROPEAN DIRECTIVE FOR ENERGY RELATED PRODUCTS

pag. 422

Energy saving circulating twin pumps

NCE ES

ErP READY 2015 — APPLIES TO EUROPEAN DIRECTIVE FOR ENERGY RELATED PRODUCTS

pag. 458

Energy saving circulating pumps for sanitary hot water

NCE H F

ErP READY 2015 — APPLIES TO EUROPEAN DIRECTIVE FOR ENERGY RELATED PRODUCTS

pag. 429

Energy saving circulating pumps with flanges

NCE PS

pag. 462

Energy saving circulating pumps for sanitary hot water

NCED H F

ErP READY 2015 — APPLIES TO EUROPEAN DIRECTIVE FOR ENERGY RELATED PRODUCTS

pag. 429

Energy saving circulating twin pumps with flanges

NCS3

pag. 466

Circulating pumps for sanitary hot water

NCE HQ F

ErP READY 2015 — APPLIES TO EUROPEAN DIRECTIVE FOR ENERGY RELATED PRODUCTS

pag. 432

Energy saving circulating pumps

NC3

pag. 469

Three speeds circulating pumps with threaded ports

CALPEDA ROMANIA - INFINITY PUMPS SRL
Tel: 0268.33.47.47 / 0722.244.944
vanzari@calpeda.ro | www.calpeda.ro

ENERGY EFFICIENCY OF CIRCULATING PUMPS

Directive of the European Parliament COMMISSION REGULATION (EC) No 641/2009 and 622/2012

Eco-design Directive of Energy Using Products (**ErP Directive - Energy-related Products**). The European Union wants to improve the design of equipment that "consume" significant energy e.g. (televisions, refrigerators, washing machines, boilers, pumps, and motors etc.) To improve eco-design providing environmental sustainability, reduducing negative environmental impact as the consequence of production, use and disposal of products.

The objective of the Directive is to force manufacturers and importers to produce and distribute products with high energy efficiency, and carbon output.
The criteria for eco-design will be an integral part of the declaration of conformity (**CE**), which is a necessary requirement/mark for products being sold in the EU.

This Regulation shall apply to:

Stand-alone* or integrated** circulators with the motor immersed in the pumped medium, with hydraulic power from 1 up to 2500 W, designed for use in heating systems or in secondary circuits of cooling distribution systems.

* Stand alone circulators are commonly available on the market.
** circulators integrated in products are component of a device, such as boilers, heat pumps, etc..

This Regulation shall not apply to:

a) drinking water circulators
b) circulators integrated in products and placed on the market not later than 1 January 2020 as replacement for identical circulators integrated in products and placed on the market no later than 1 August 2015. The replacement product or its packaging must clearly indicate the product(s) for which it is intended.

STANDARD OPERATING MODE IN CIRCULATING PUMPS

Proportional pressure curve
In the proportional pressure operating mode the pump changes the working pressure in-line with the flow demand of the system.
This operating mode is mainly used in:
- two pipe heating systems with thermostatic valves,
- systems with long pipelines;
- systems with high head losses.

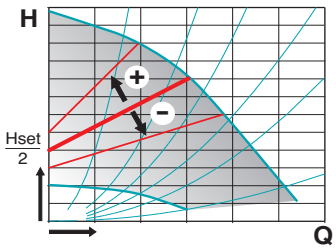

Constant pressure curve
In the constant pressure operating mode, the pump, keeps the pressure constant when the demand for water changes.
This operating mode is mainly used in:
- two pipe heating systems with thermostatic valves and low head losses
- underfloor heating systems with thermostatic valves;
- one pipe heating systems with thermostatic valves.

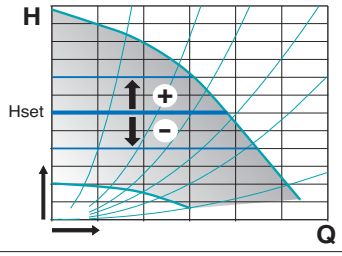

Constant speed curve
In this operating mode the pump works as a traditional pump with a constant curve, the operating curve can be chosen by the user within a range of curves.

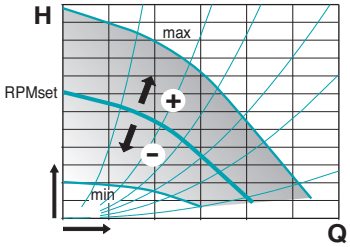

CALPEDA ROMANIA - INFINITY PUMPS SRL
Tel: 0268.33.47.47 / 0722.244.944
vanzari@calpeda.ro | www.calpeda.ro

NCE EI

Energy saving circulating pumps

ErP READY 2015 — APPLIES TO EUROPEAN DIRECTIVE FOR ENERGY RELATED PRODUCTS

Construction
Energy saving variable speed circulating pump driven by a permanent magnet synchronous motor (pm) controlled by on board inverter.

Applications
Small domestic heating systems.
Floor heating systems.

Operating conditions
- Liquid temperature from +2 °C to +95 °C
- Ambient temperature from 0 °C to +40 °C
- Maximum permissible working pressure: 6 bar
- Storage: -20°C/+70°C max. relative humidity 95% at 40 °C
- Certifications: in conformity with CE requirements
- Sound pressure ≤ 43 dB (A).
- Minimum suction pressure: 0,3 bar at 50 °C
  1,0 bar at 95 °C
- Maximum glycol quantity: 40%
- EMC according to: EN 55014-1, EN 61000-3-2, EN 55014-2
- Connections: threaded ports ISO 228: G 1, G 1 1/2, G 2
- The benchmark for most efficient circulators is EEI ≤ 0,20.
- Minimun power: 3 W.

Motor
Synchronous motor with permanent magnet.
- Motor: variable speed
- Standard voltage: single-phase 230 V (-10%;+6%)
- Frequency: 50-60 Hz
- Protection: IP 44
- Insulation class: H
- Class II appliance
- Overload protection (jammed rotor):
  1) automatic protection with electronic rotor release
  2) Overload thermal protector
- Cable: phases and neutral
- Constructed in accordance with: EN 60335-1, EN 60335-2-51.

Special features on request
Brass or cast iron unions.
EPP thermal insulation shell.

Designation

NCE EI 32 - 60 / 180

- Series
- Version
- DN ports in mm
- Max. head in dm
- connection size mm

Features

Compact design
The space saving **NCE EI** is a very compact circulating pump, allows inr easy installation in small domestic heating systems.

Easy to install and to adjust
Installing the **NCE EI** is considerably simplified by the quick setting and power installation plug.

Reliable
Like all our electronic circulating pumps, the **NCE EI** features the patented self-cleaning square chamber design, which eliminates any possibility of rotor blockage.
Ceramic shaft
Hydraulics components are completely painted with cataphoresis.

Easy use
Operating range with fixed curves from 0,5 m to 7 m; possibility to choose 2 (1-2) proportional pressure curves and 2 (I-II) constant pressure curves.

CALPEDA ROMANIA - INFINITY PUMPS SRL
Tel: 0268.33.47.47 / 0722.244.944
vanzari@calpeda.ro | www.calpeda.ro

NCE EI

Energy saving circulating pumps

Operating modes

PROPORTIONAL CURVE PROGRAMMING Δp-v
(GREEN LED)
Moving the switch to 1 or 2 setting, the pump operates with the proportional curve.
This mode ensures maximum energy efficiency.

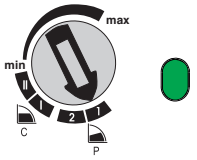

CONSTANT CURVE PROGRAMMING Δp-c
(ORANGE LED)
Moving the switch to I or II setting, the pump operates with a constant curve according to the selected flow rates.

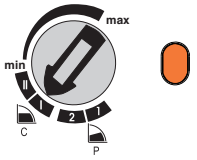

MANUAL PROGRAMMING
(BLUE LED)
Setting the switch in any position between the MIN and MAX points, the most suitable operating curve for the installation is manually selected.

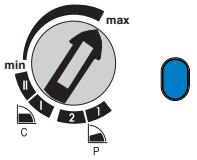

WARNING!
- The red LED indicates that the pump is not rotating but is still under tension.
- White flashing LED : plant degassing requirement, air in the system.

Characteristic curves

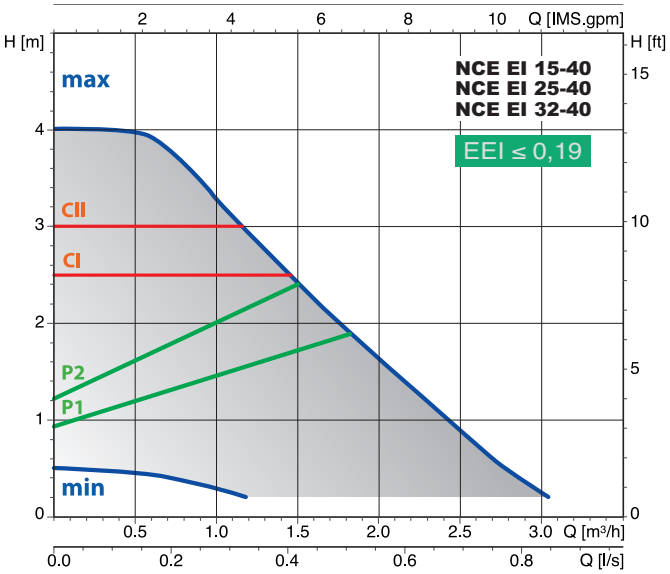

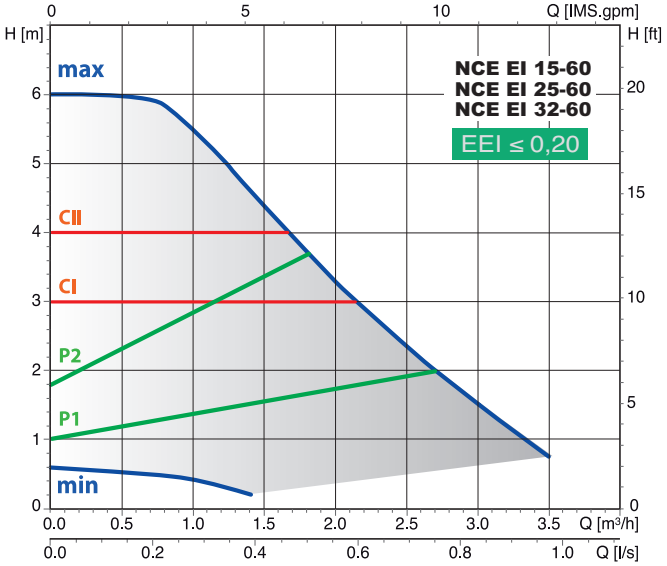

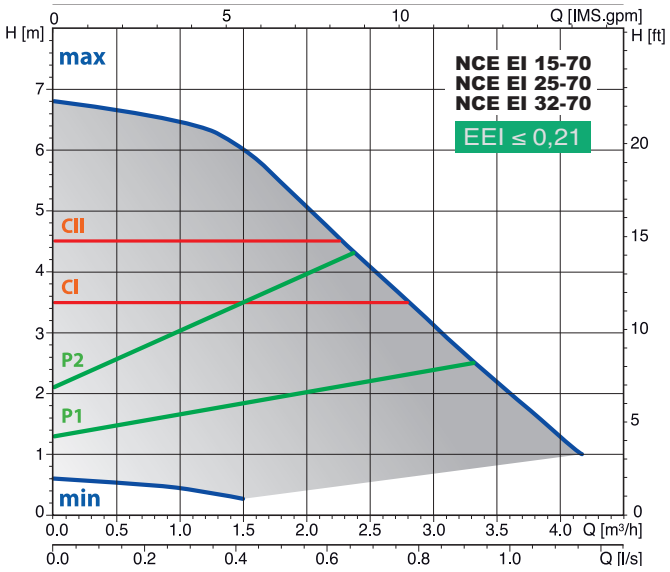

CI-CII constant curve
P1-P2 proportional curve
min-max n fixed curves

CALPEDA ROMANIA - INFINITY PUMPS SRL
Tel: 0268.33.47.47 / 0722.244.944
vanzari@calpeda.ro | www.calpeda.ro

NCE EI

Energy saving circulating pumps

Materials

Component	Pos.	Material
Pump casing	1	Cast iron GJL 200 EN 1561
Impeller	2	Composite
Shaft	3	Ceramic
Bearings	4	Carbon
Thrust bearing	5	Ceramic
Rotor	6	Composite / Ferrite
Winding	7	Copper wire
Electronic card	8	-
Gasket	9	EPDM

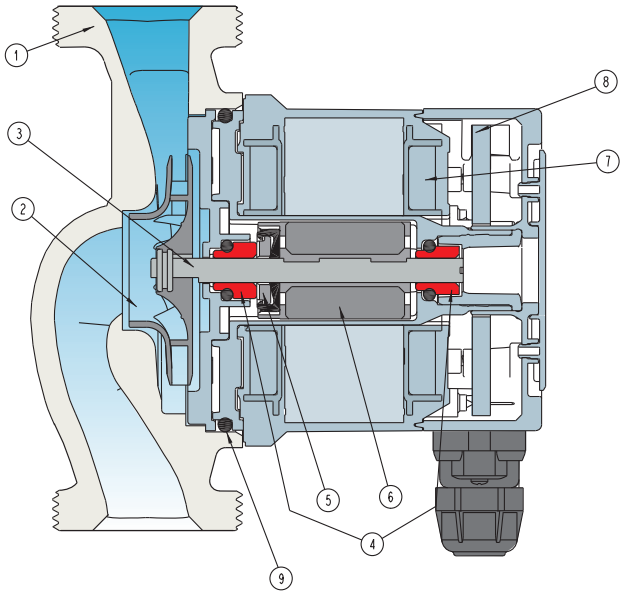

Dimensions and weights

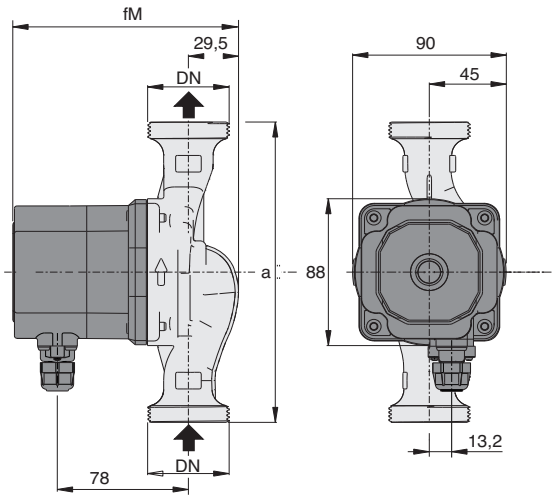

TYPE	DN	230V A max	230V A min	P1 W max	P1 W min	mm fm	mm a	kg
NCE EI 15-40/130	G 1	0,17	0,03	22	3	134	130	1,67
NCE EI 25-40/130	G 1 1/2							1,81
NCE EI 25-40/180	G 1 1/2	0,17	0,03	22	3	134	180	1,96
NCE EI 32-40/180	G 2							2,10
NCE EI 15-60/130/A	G 1	0,33	0,03	42	3	134	130	1,67
NCE EI 25-60/130/A	G 1 1/2							1,81
NCE EI 25-60/180/A	G 1 1/2	0,33	0,03	42	3	134	180	1,96
NCE EI 32-60/180/A	G 2							2,10
NCE EI 15-70/130	G 1	0,44	0,03	56	3	144	130	1,91
NCE EI 25-70/130	G 1 1/2							2,05
NCE EI 25-70/180	G 1 1/2	0,44	0,03	56	3	144	180	2,20
NCE EI 32-70/180	G 2							2,34

Unions (on request)

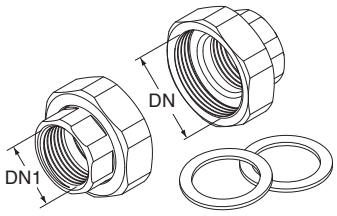

		DN	DN1
KIT G 1 - G 1/2	(NCE . 15..)	G 1	G 1/2
KIT G 1 1/2 - G 1	(NCE . 25..)	G 1 1/2	G 1
KIT G 2 - G 1 1/4	(NCE . 32..)	G 2	G 1 1/4

CALPEDA ROMANIA - INFINITY PUMPS SRL
Tel: 0268.33.47.47 / 0722.244.944
vanzari@calpeda.ro | www.calpeda.ro

Examples of installations

Installation

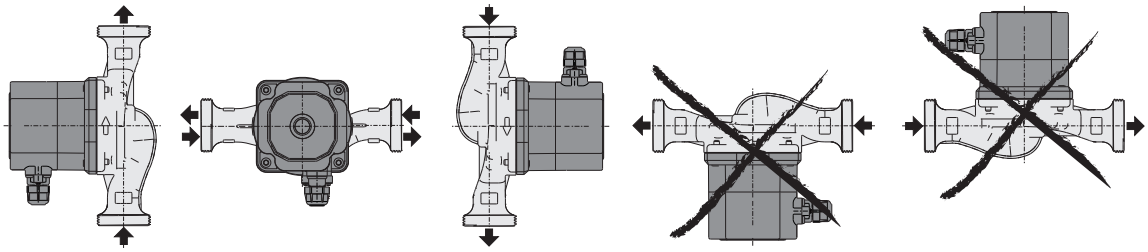

Terminal box arrangement (on request)

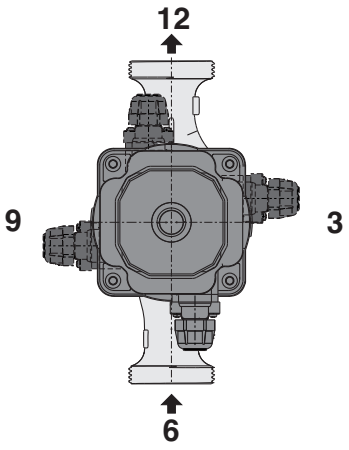

CALPEDA ROMANIA - INFINITY PUMPS SRL
Tel: 0268.33.47.47 / 0722.244.944
vanzari@calpeda.ro | www.calpeda.ro

NCE(D) H

Energy saving circulating pumps

ErP READY 2015 — APPLIES TO EUROPEAN DIRECTIVE FOR ENERGY RELATED PRODUCTS

Construction

Energy saving variable speed circulating pump driven by a permanent magnet synchronous motor (pm) controlled by on board inverter.

Applications

Heating and conditioning systems.

Operating conditions

- Liquid temperature from +2 °C to +110 °C
- Ambient temperature from 0 °C to +40 °C
- Maximum permissible working pressure: 10 bar
- Storage: -20°C/+70°C max. relative humidity 95% at 40 °C
- Certifications: in conformity with CE requirements
- Sound pressure ≤ 40 dB (A).
- Minimum suction pressure: - 0,05 bar at 75 °C
  - 0,28 bar a 90 °C.
- Maximum glycol quantity: 20%.
- EMC according to: EN 55014-1, EN 55014-2
  EN 61000-3-2, EN 61000-3-2.
- Connections: threaded ports ISO 228: G 1 1/2, G 2.
- The benchmark for most efficient circulators is EEI ≤ 0,20.

Motor

Synchronous motor with permanent magnet.
- Motor: variable speed
- Standard voltage: single-phase 230 V (-10%;+6%)
- Frequency: 50/60 Hz
- Protection: IP 44
- Insulation class: F
- Overload protection (integrated).
- Cable: phases and neutral.
- Constructed in accordance with: EN 60335-1, EN 60335-2-51.

Special features on request

Additional module (included with NCEDH):
- Modbus
- Eternet
- analog input 0-10V
- remote on/off input
- output relay

Designation

NCE(D) H 25 - 100 / 180

- Series
- Twin pumps version
- Version
- DN ports in mm
- Max. head in dm
- connection size mm

Features

Smart pump

NCE H adapt its functions to the system: the circulator measures the pressure and the flow and adjusts the speed to the selected pressure.

Easy use

There are different operating modes selectable from the control panel.

CALPEDA ROMANIA - INFINITY PUMPS SRL
Tel: 0268.33.47.47 / 0722.244.944
vanzari@calpeda.ro | www.calpeda.ro

NCE(D) H

Energy saving circulating pumps

Operating modes

Automatic mode
(factory setting):
In this mode the pump automatically sets the operating pressure, depending on the hydraulic system. This mode is recommended in most systems.

Proportional pressure mode:
The circulator changes the pressure propotionally to the current flow.
The pressure value can be adjusted with the + and – buttons.

Constant pressure mode:
The circulator mantains the pressure constant when the reference flow changes.
The pressure value can be adjusted with the + and – buttons.

Fixed speed mode:
The circulator works with constant curve and the curve could be changed using + e – buttons.

Night mode:.
When the liquid temperature fall by 15-20°C the pump automatically swiches to night mode, in practice the circulator works at minimum curve.
When the temperature rises again the pump comes back to the selected mode
The night mode could be selected with any operating mode.

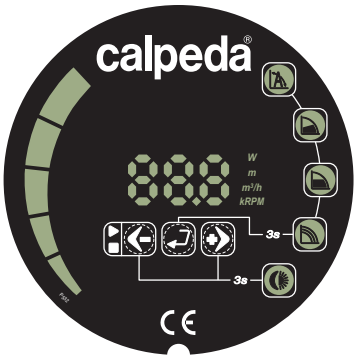

Operating mode-control panel

NCE(D) H could works in:
- automatic mode
- proportional pressure mode
- constant pressure mode
- fixed speed mode
- night mode

The night mode could be selected with any operating mode.

Coverage chart

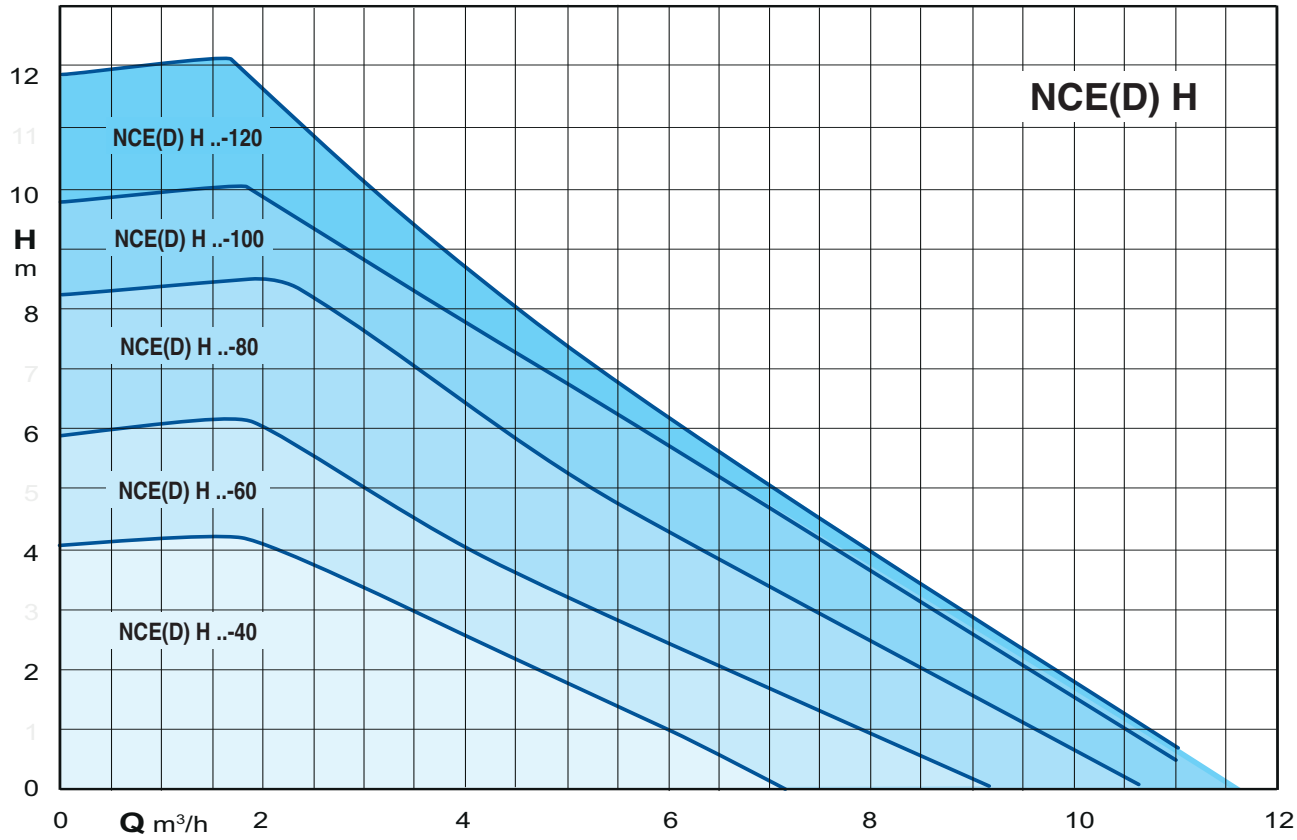

CALPEDA ROMANIA - INFINITY PUMPS SRL
Tel: 0268.33.47.47 / 0722.244.944
vanzari@calpeda.ro | www.calpeda.ro

NCE(D) H

Energy saving circulating pumps

calpeda

Characteristic curves

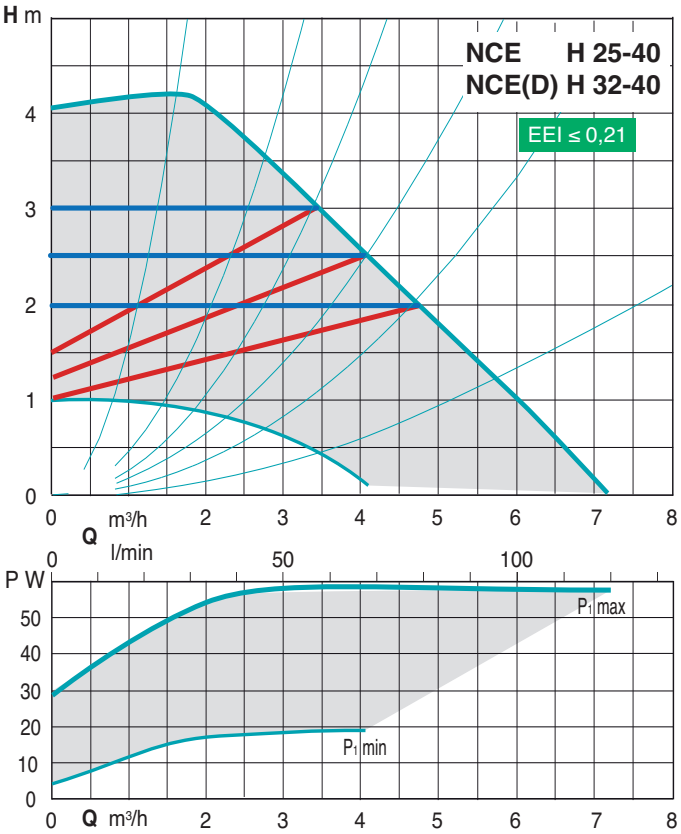

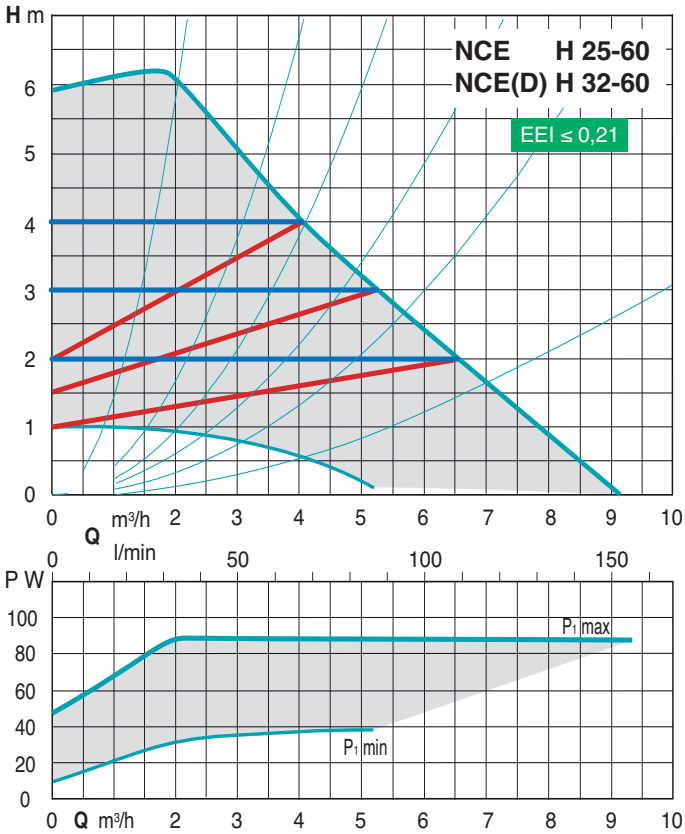

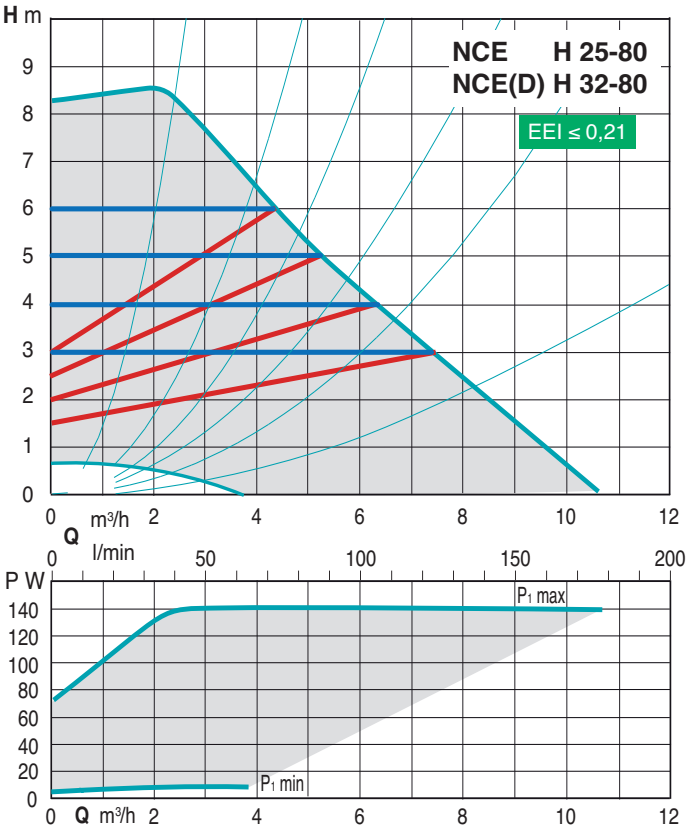

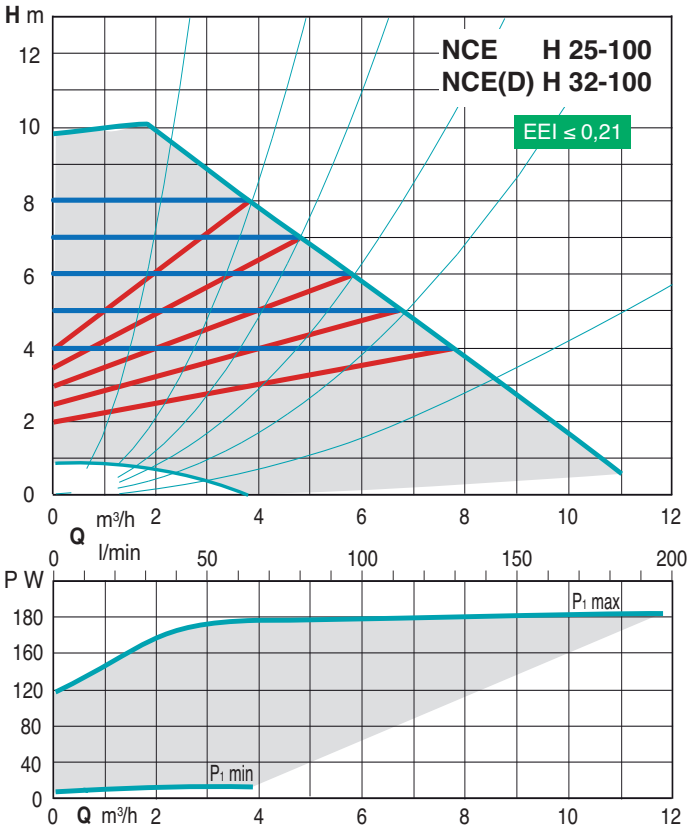

CALPEDA ROMANIA - INFINITY PUMPS SRL
Tel: 0268.33.47.47 / 0722.244.944
vanzari@calpeda.ro | www.calpeda.ro

NCE(D) H

Energy saving circulating pumps

Characteristic curves

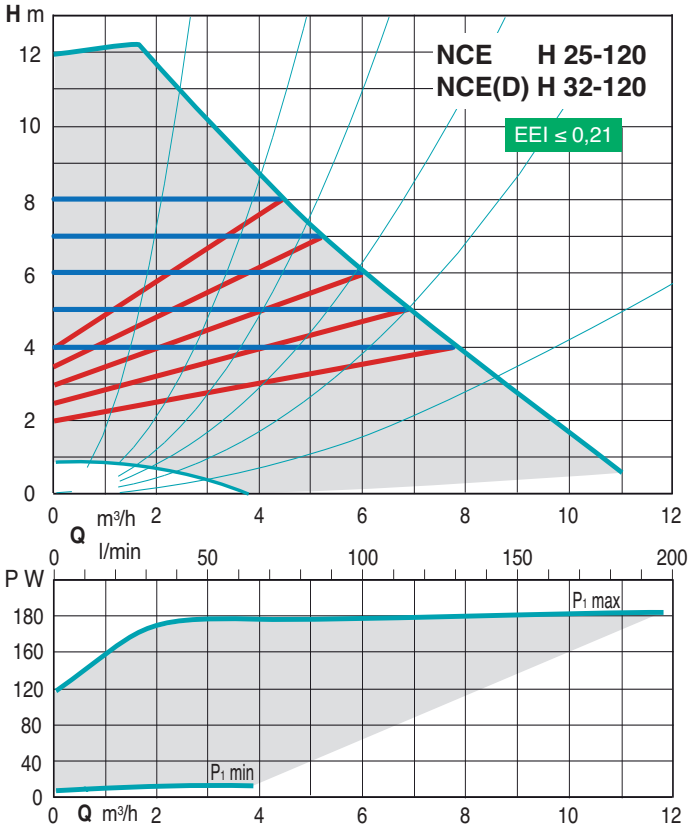

CALPEDA ROMANIA - INFINITY PUMPS SRL
Tel: 0268.33.47.47 / 0722.244.944
vanzari@calpeda.ro | www.calpeda.ro

Materials

Component	Pos.	Material
Pump casing	1	Cast iron GJL 200 EN 1561
Impeller	2	Composite
Shaft	3	Stainless steel
Bearings	4	Carbon
Thrust bearing	5	Ceramic
Rotor	6	Stainless steel jacket
Winding	7	Copper wire
Electronic card	8	-
Gasket	9	EPDM

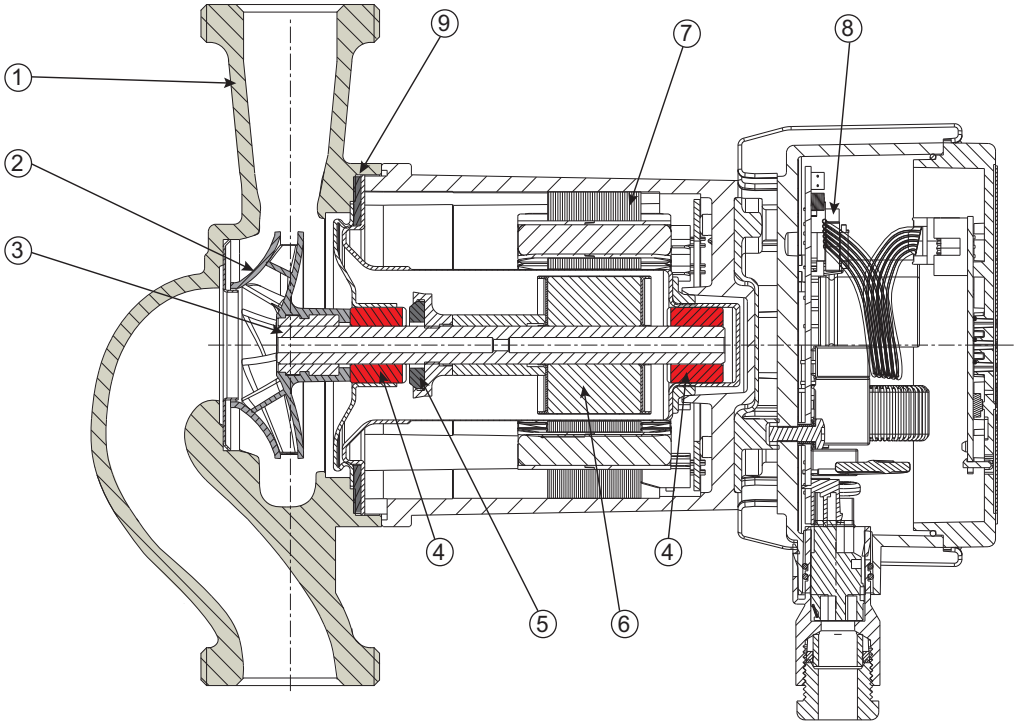

CALPEDA ROMANIA - INFINITY PUMPS SRL
Tel: 0268.33.47.47 / 0722.244.944
vanzari@calpeda.ro | www.calpeda.ro

NCE H

Energy saving circulationg pumps

Examples of installations

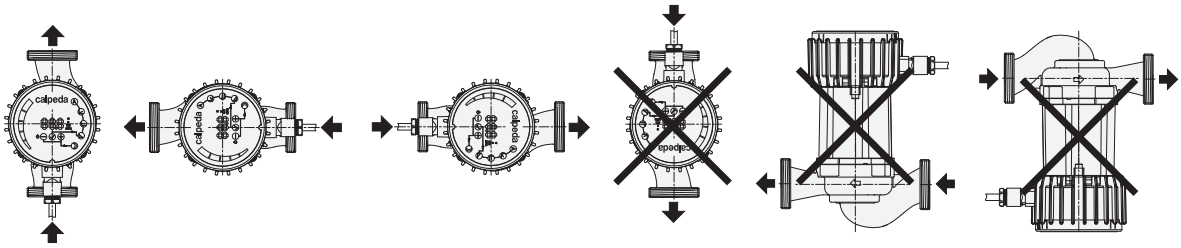

Dimensions and weights

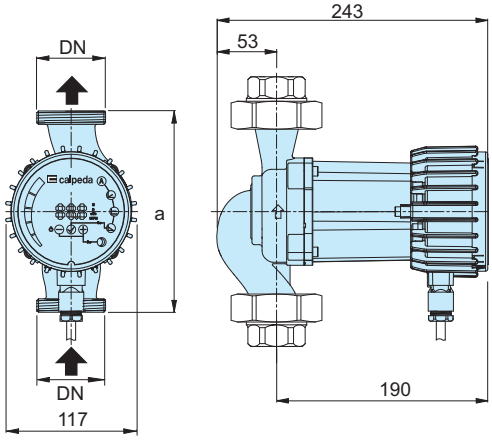

TYPE	DN	H	Q	1~ 230 V		P_1		a	
		m	m^3/h	A min	A max	W min	W max	mm	kg
NCE H 25-40/180 **NCE H 32-40/180**	G 1 1/2 G 2	4	5	0,1	0,5	10	60	180	4 4,1
NCE H 25-60/180 **NCE H 32-60/180**	G 1 1/2 G 2	6	7,5	0,1	0,75	10	90	180	4 4,1
NCE H 25-80/180 **NCE H 32-80/180**	G 1 1/2 G 2	8	9	0,1	1,15	10	140	180	4 4,1
NCE H 25-100/180 **NCE H 32-100/180**	G 1 1/2 G 2	10	11	0,1	1,5	10	180	180	4 4,1
NCE H 25-120/180 **NCE H 32-120/180**	G 1 1/2 G 2	12	15	0,1	1,5	10	180	180	4 4,1

Unions (on request)

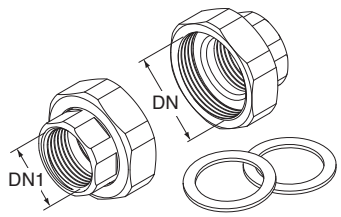

	DN	DN1
KIT G 1 - G 1/2 (NCE . 15..)	G 1	G 1/2
KIT G 1 1/2 - G 1 (NCE . 25..)	G 1 1/2	G 1
KIT G 2 - G 1 1/4 (NCE . 32..)	G 2	G 1 1/4

CALPEDA ROMANIA - INFINITY PUMPS SRL
Tel: 0268.33.47.47 / 0722.244.944
vanzari@calpeda.ro | www.calpeda.ro

NCED H

Energy saving circulationg pumps

Examples of installations

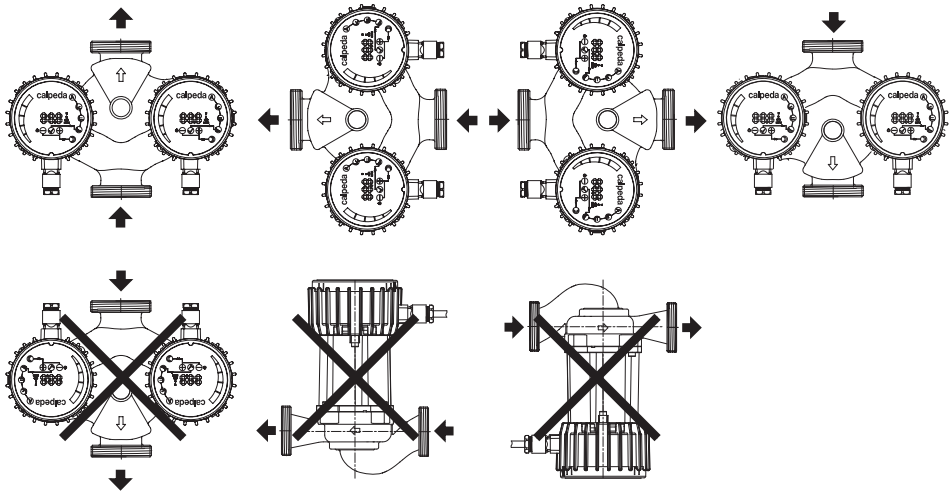

Dimensions and weights

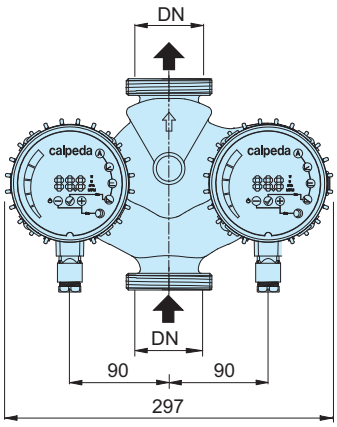

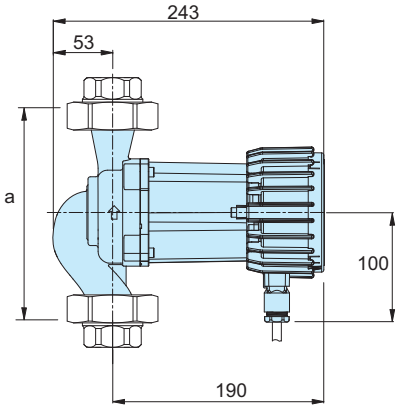

TYPE	DN	H m	Q m³/h	1~ 230 V A min	A max	P1 W min	W max	a mm	kg
NCED H 32-40/180	G 2	4	5	0,1	0,5	10	60	180	8
NCED H 32-60/180	G 2	6	7,5	0,1	0,75	10	90	180	8
NCED H 32-80/180	G 2	8	9	0,1	1,15	10	140	180	8
NCED H 32-100/180	G 2	10	11	0,1	1,5	10	180	180	8
NCED H 32-120/180	G 2	12	15	0,1	1,5	10	180	180	8

Unions (on request)

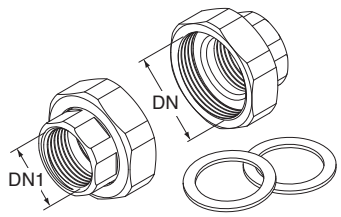

TYPE	DN	DN1
KIT G 1 - G 1/2 (NCE . 15..)	G 1	G 1/2
KIT G 1 1/2 - G 1 (NCE . 25..)	G 1 1/2	G 1
KIT G 2 - G 1 1/4 (NCE . 32..)	G 2	G 1 1/4

CALPEDA ROMANIA - INFINITY PUMPS SRL
Tel: 0268.33.47.47 / 0722.244.944
vanzari@calpeda.ro | www.calpeda.ro

NCE(D) H.F Energy saving circulating pumps with flanges

ErP READY 2015 — APPLIES TO EUROPEAN DIRECTIVE FOR ENERGY RELATED PRODUCTS

Construction
Energy saving variable speed circulating pump driven by a permanent magnet synchronous motor (pm) controlled by on board inverter.

Applications
Heating and conditioning systems.

Operating conditions
- Liquid temperature from +2 °C to +110 °C
- Ambient temperature from 0 °C to +40 °C
- Maximum permissible working pressure: 10 bar
- Storage: -20°C/+70°C max. relative humidity 95% at 40 °C
- Certifications: in conformity with CE requirements
- Sound pressure ≤ 40 dB (A).
- Minimum suction pressure: - 0,05 bar at 75 °C
  - 0,28 bar a 90 °C.
- Maximum glycol quantity: 20%.
- EMC according to: EN 55014-1, EN 55014-2
  EN 61000-3-2, EN 61000-3-2.
- Connections: Flanges according to PN 6/10, EN 1092-2, DN 32, 40, 50.
- The benchmark for most efficient circulators is EEI ≤ 0,20.

Motor
Synchronous motor with permanent magnet.
- Motor: variable speed
- Standard voltage: single-phase 230 V (-10%;+6%)
- Frequency: 50/60 Hz
- Protection: IP 44
- Insulation class: F
- Overload protection (integrated).
- Cable: phases and neutral.
- Constructed in accordance with: EN 60335-1, EN 60335-2-51.

Special features on request
Additional module (included with NCEDH. F):
- Modbus
- Eternet
- analog input 0-10V
- remote on/off input
- output relay

Designation

NCE(D) H 40 F - 60 / 220

- Series
- Twin pumps version
- Version
- DN ports in mm
- With flanges
- Max. head in dm
- connection size mm

Features

Smart pump
NCE H.F adapt its functions to the system: the circulator measures the pressure and the flow and adjusts the speed to the selected pressure.

Easy use
There are different operating modes selectable from the control panel.

CALPEDA ROMANIA - INFINITY PUMPS SRL
Tel: 0268.33.47.47 / 0722.244.944
vanzari@calpeda.ro | www.calpeda.ro

NCE(D) H.F Energy saving circulating pumps with flanges

Operating modes

Automatic mode
(factory setting):
In this mode the pump automatically sets the operating pressure, depending on the hydraulic system. This mode is recommended in most systems.

Proportional pressure mode:
The circulator changes the pressure propotionally to the current flow.
The pressure value can be adjusted with the + and – buttons.

Constant pressure mode:
The circulator mantains the pressure constant when the reference flow changes.
The pressure value can be adjusted with the + and – buttons.

Fixed speed mode:
The circulator works with constant curve and the curve could be changed using + e – buttons.

Night mode:.
When the liquid temperature fall by 15-20°C the pump automatically swiches to night mode, in practice the circulator works at minimum curve.
When the temperature rises again the pump comes back to the selected mode
The night mode could be selected with any operating mode.

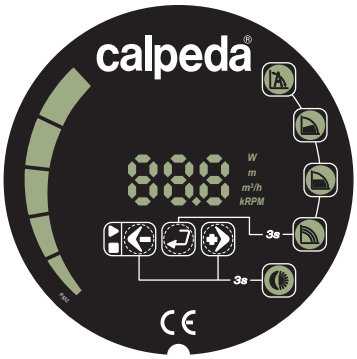

Operating mode-control panel

NCE(D) H.F could works in:
- automatic mode
- proportional pressure mode
- constant pressure mode
- fixed speed mode
- night mode

The night mode could be selected with any operating mode.

Coverage chart

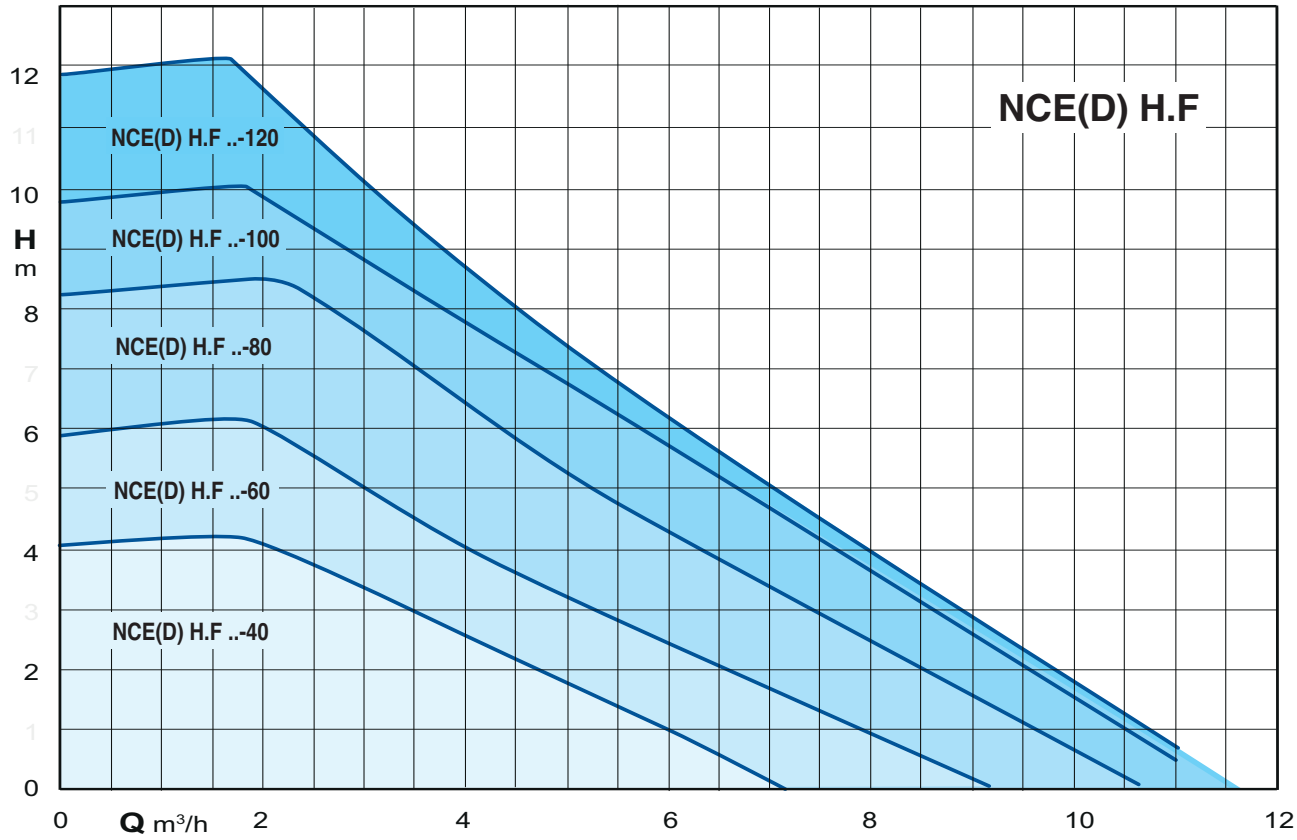

CALPEDA ROMANIA - INFINITY PUMPS SRL
Tel: 0268.33.47.47 / 0722.244.944
vanzari@calpeda.ro | www.calpeda.ro

NCE(D) H.F Energy saving circulating pumps with flanges

Characteristic curves

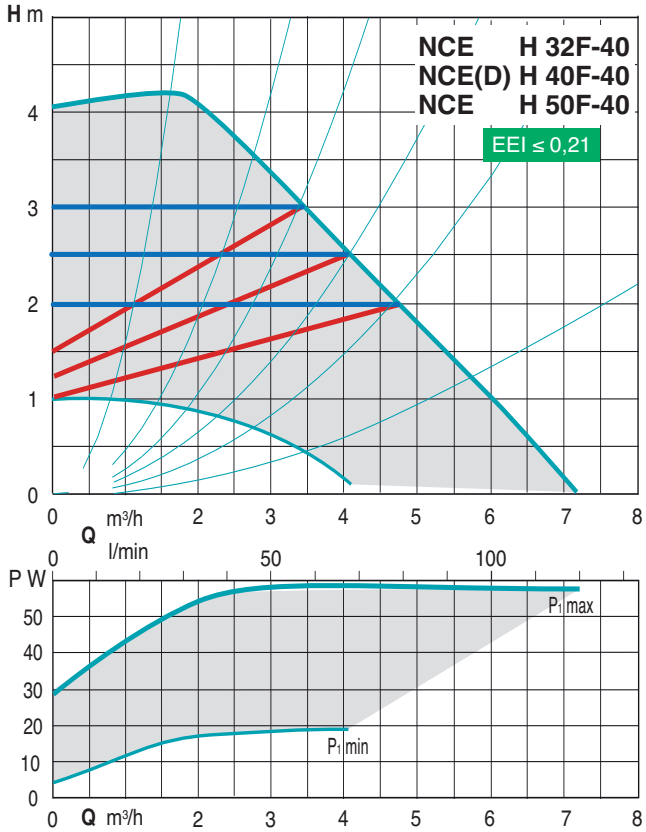

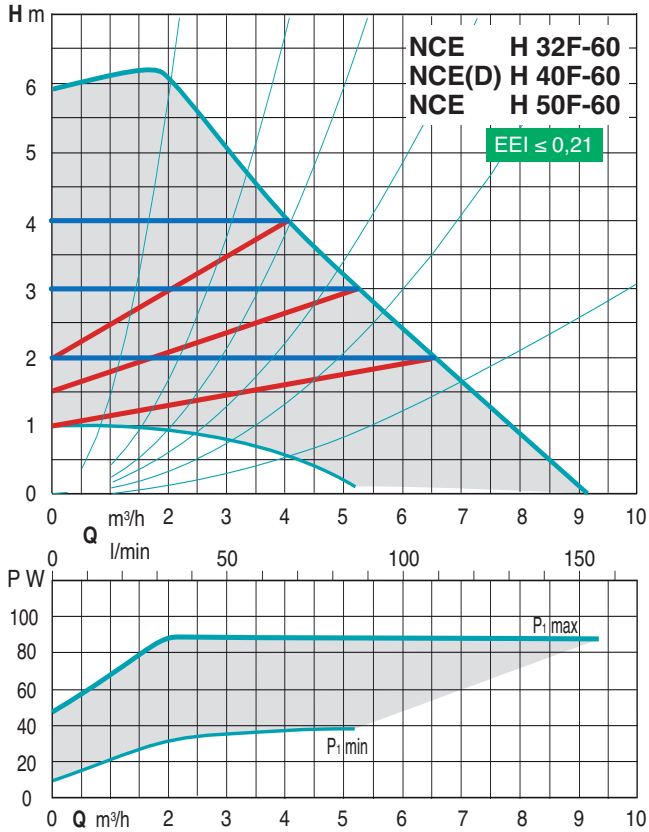

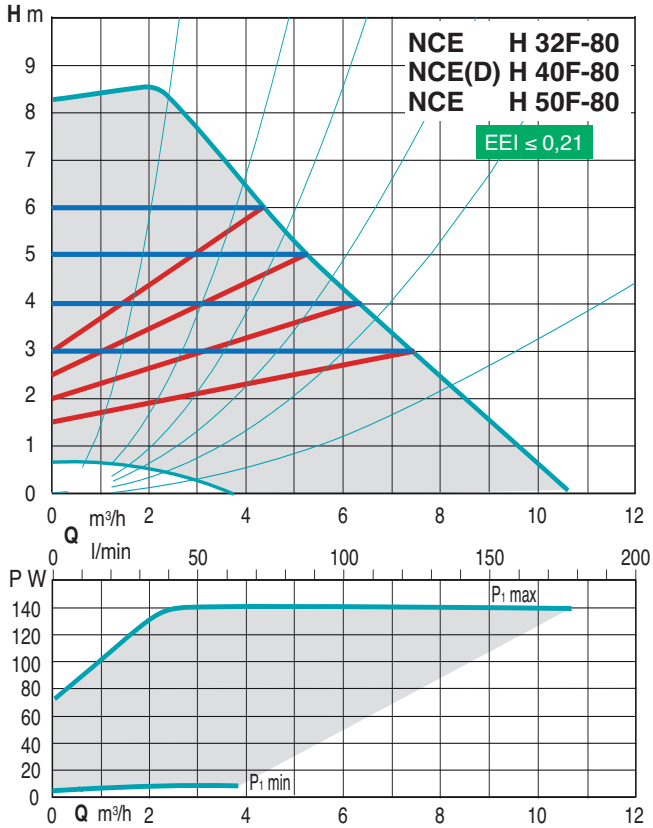

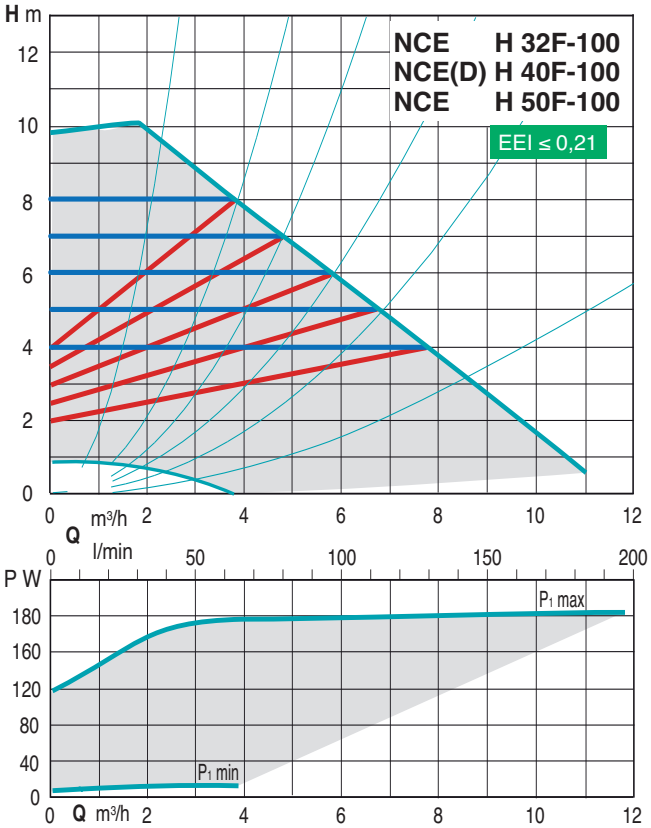

CALPEDA ROMANIA - INFINITY PUMPS SRL
Tel: 0268.33.47.47 / 0722.244.944
vanzari@calpeda.ro | www.calpeda.ro

NCE(D) H.F Energy saving circulating pumps with flanges

Characteristic curves

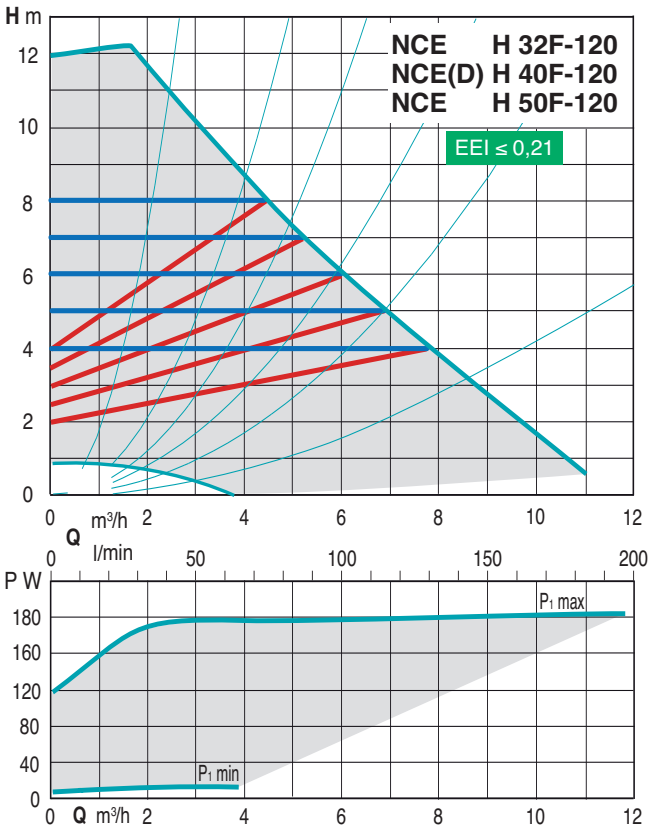

CALPEDA ROMANIA - INFINITY PUMPS SRL
Tel: 0268.33.47.47 / 0722.244.944
vanzari@calpeda.ro | www.calpeda.ro

NCE(D) H.F Energy saving circulating pumps with flanges

Materials

Component	Pos.	Material
Pump casing	1	Cast iron GJL 200 EN 1561
Impeller	2	Composite
Shaft	3	Stainless steel
Bearings	4	Carbon
Thrust bearing	5	Ceramic
Rotor	6	Stainless steel jacket
Winding	7	Copper wire
Electronic card	8	-
Gasket	9	EPDM

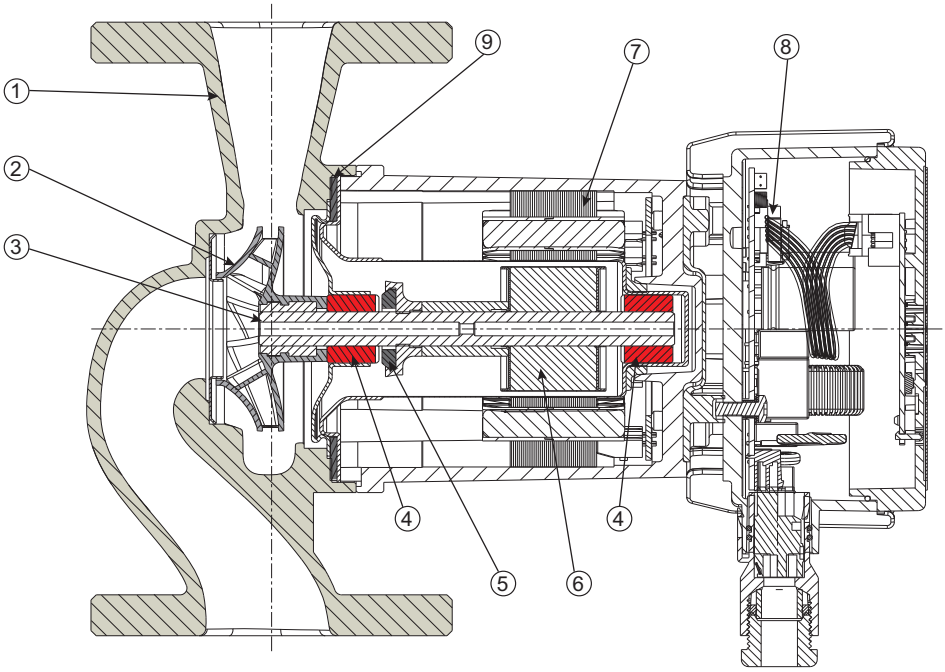

CALPEDA ROMANIA - INFINITY PUMPS SRL
Tel: 0268.33.47.47 / 0722.244.944
vanzari@calpeda.ro | www.calpeda.ro

NCE(D) H.F Energy saving circulating pumps with flanges

Examples of installations

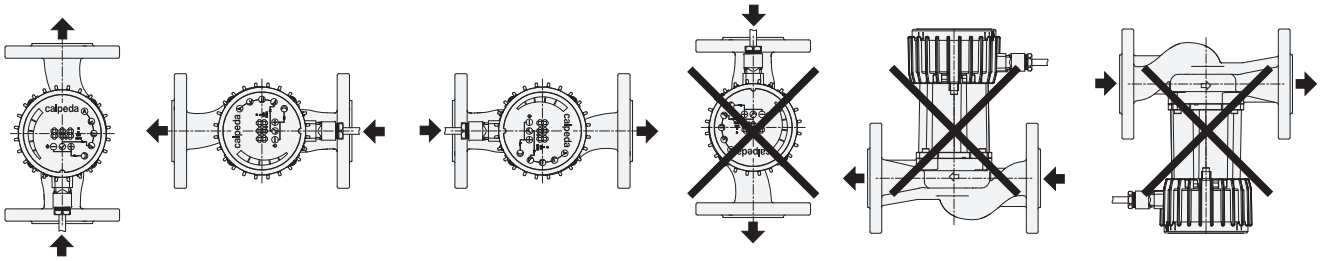

Dimensions and weights

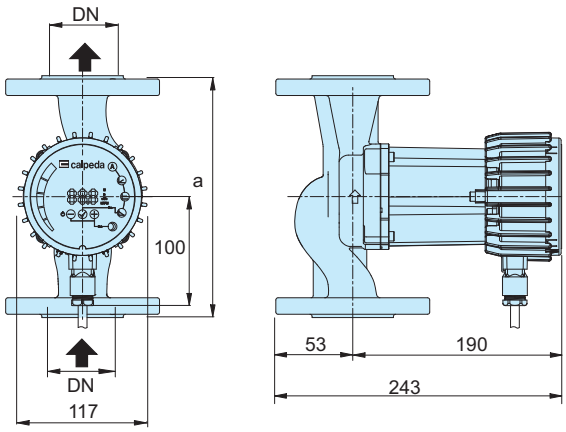

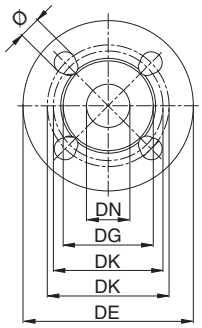

TYPE	DN	H m	Q m³/h	1~ 230 V A min	A max	P1 W min	W max	a mm	kg
NCE H 32F-40/220	32	4	5	0,1	0,5	10	60	220	7,4
NCE H 40F-40/220	40							220	8,5
NCE H 50F-40/240	50							240	9,8
NCE H 32F-60/220	32	5	7,5	0,1	0,75	10	90	220	7,4
NCE H 40F-60/220	40							220	8,5
NCE H 50F-60/240	50							240	9,8
NCE H 32F-80/220	32	8	9	0,1	1,15	10	140	220	7,4
NCE H 40F-80/220	40							220	8,5
NCE H 50F-80/240	50							240	9,8
NCE H 32F-100/220	32	10	11	0,1	1,5	10	180	220	7,4
NCE H 40F-100/220	40							220	8,5
NCE H 50F-100/240	50							240	9,8
NCE H 32F-120/220	32	12	15	0,1	1,5	10	180	220	7,9
NCE H 40F-120/220	40							220	8,7
NCE H 50F-120/240	50							240	10

DN	DE	DK	DG	holes N.	holes Ø
32	140	90/100	74	4	14/19
40	150	100/110	80	4	14/19
50	165	110/125	90	4	14/19

CALPEDA ROMANIA - INFINITY PUMPS SRL
Tel: 0268.33.47.47 / 0722.244.944
vanzari@calpeda.ro | www.calpeda.ro

NCE(D) H.F

Energy saving circulating pumps with flanges

Examples of installations

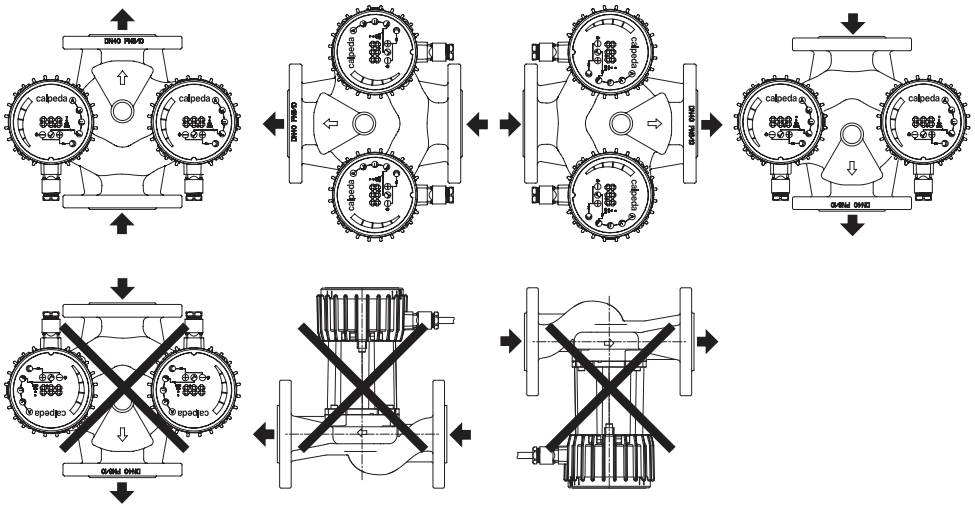

Dimensions and weights

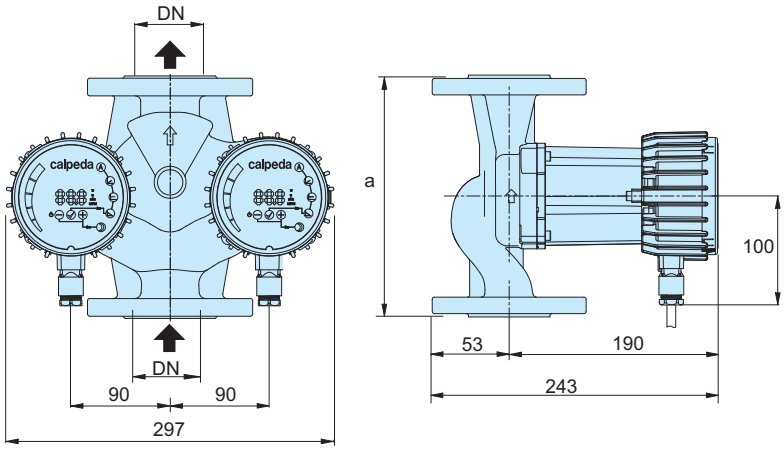

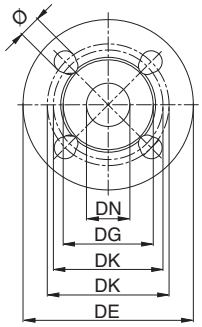

TYPE	DN	H	Q	1~ 230 V		P1		a	
		m	m³/h	A min	A max	W min	W max	mm	kg
NCED H 40F-40/220	40	4	5	0,1	0,5	10	60	220	11,3
NCED H 40F-60/220	40	5	7,5	0,1	0,75	10	90	220	11,3
NCED H 40F-80/220	40	8	9	0,1	1,15	10	140	220	11,3
NCED H 40F-100/220	40	10	11	0,1	1,5	10	180	220	11,3
NCED H 40F-120/220	40	12	15	0,1	1,5	10	180	220	11,3

DN	DE	DK	DG	holes	
				N.	Ø
32	140	90/100	74	4	14/19
40	150	100/110	80	4	14/19
50	165	110/125	90	4	14/19

CALPEDA ROMANIA - INFINITY PUMPS SRL
Tel: 0268.33.47.47 / 0722.244.944
vanzari@calpeda.ro | www.calpeda.ro

NCE HQ.F

Energy saving circulating pumps with flanges

ErP READY 2015 — APPLIES TO EUROPEAN DIRECTIVE FOR ENERGY RELATED PRODUCTS

Construction

Energy saving variable speed circulating pump driven by a permanent magnet synchronous motor (pm) controlled by on board inverter.

Digital input and output:
- remote on/off input
- output relay

Applications

Heating and conditioning systems.

Operating conditions

- Liquid temperature from +2 °C to +110 °C
- Ambient temperature from 0 °C to +40 °C
- Maximum permissible working pressure: 10 bar
- Storage: -20°C/+70°C max. relative humidity 95% at 40 °C
- Certifications: in conformity with CE requirements
- Sound pressure ≤ 40 dB (A).
- Minimum suction pressure: - 0,05 bar at 75 °C
  - 0,28 bar a 90 °C.
- Maximum glycol quantity: 20%.
- EMC according to: EN 55014-1, EN 55014-2
  EN 61000-3-2, EN 61000-3-2.
- Connections: Flanges according to PN 6/10, EN 1092-2, DN 32,40,50,65,80,100.
- The benchmark for most efficient circulators is EEI ≤ 0,20.

Designation

NCE HQ 40 F - 120 / 250

- Series
- Version
- DN ports in mm
- With flanges
- Max. head in dm
- connection size mm

Motor

Synchronous motor with permanent magnet.
- Motor: variable speed
- Standard voltage: single-phase 230 V (-10%;+6%)
- Frequency: 50/60 Hz
- Protection: IP 44
- Insulation class: F
- Overload protection (integrated).
- Cable: phases and neutral.
- Constructed in accordance with: EN 60335-1, EN 60335-2-51.

Special features on request

Additional module:
- Modbus
- Eternet
- analog input 0-10V

Features

Smart pump

NCE HQ.F adapt its functions to the system: the circulator measures the pressure and the flow and adjusts the speed to the selected pressure.

Easy use

There are different operating modes selectable from the control panel.

CALPEDA ROMANIA - INFINITY PUMPS SRL
Tel: 0268.33.47.47 / 0722.244.944
vanzari@calpeda.ro | www.calpeda.ro

NCE HQ.F

Energy saving circulating pumps with flanges

Operating modes

Automatic mode
(factory setting):
In this mode the pump automatically sets the operating pressure, depending on the hydraulic system. This mode is recommended in most systems.

Proportional pressure mode:
The circulator changes the pressure propotionally to the current flow.
The pressure value can be adjusted with the **+** and **–** buttons.

Constant pressure mode:
The circulator mantains the pressure constant when the reference flow changes.
The pressure value can be adjusted with the **+** and **–** buttons.

Fixed speed mode:
The circulator works with constant curve and the curve could be changed using **+** e **–** buttons.

Night mode:.
When the liquid temperature fall by 15-20°C the pump automatically swiches to night mode, in practice the circulator works at minimum curve.
When the temperature rises again the pump comes back to the selected mode
The night mode could be selected with any operating mode.

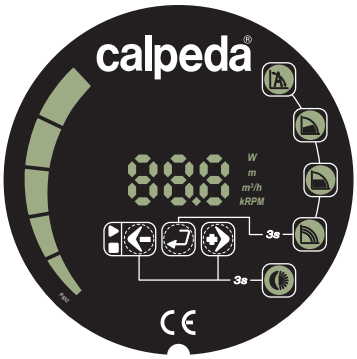

Operating mode-control panel

NCE HQ.F could works in:
- automatic mode
- proportional pressure mode
- constant pressure mode
- fixed speed mode
- night mode

The night mode could be selected with any operating mode.

Coverage chart

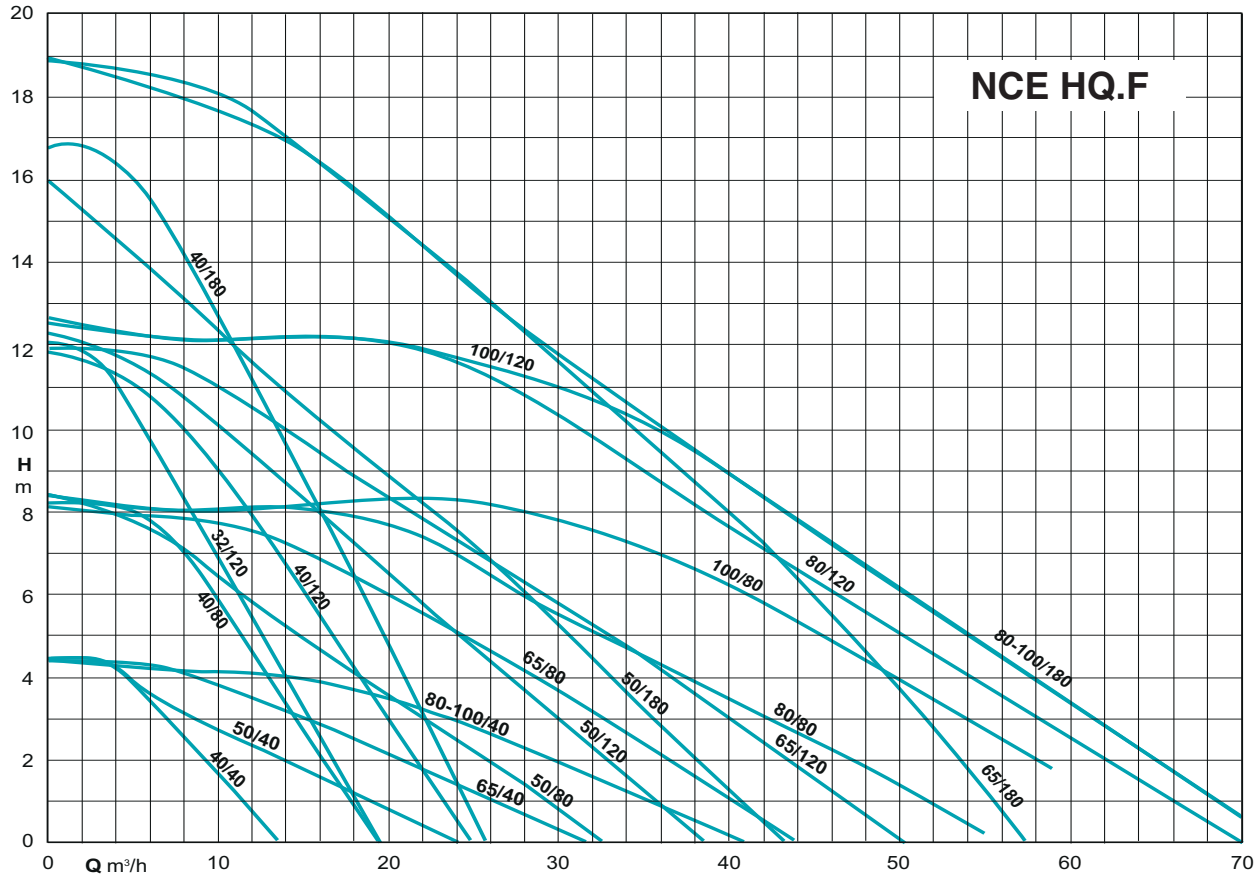

CALPEDA ROMANIA - INFINITY PUMPS SRL
Tel: 0268.33.47.47 / 0722.244.944
vanzari@calpeda.ro | www.calpeda.ro

NCE HQ.F

Energy saving circulating pumps with flanges

Materials

Component	Pos.	Material
Pump casing	1	Cast iron GJL 200 EN 1561
Impeller	2	Composite
Shaft	3	Stainless steel
Bearings	4	Carbon
Thrust bearing	5	Ceramic
Rotor	6	Stainless steel jacket
Winding	7	Copper wire
Electronic card	8	-
Gasket	9	EPDM

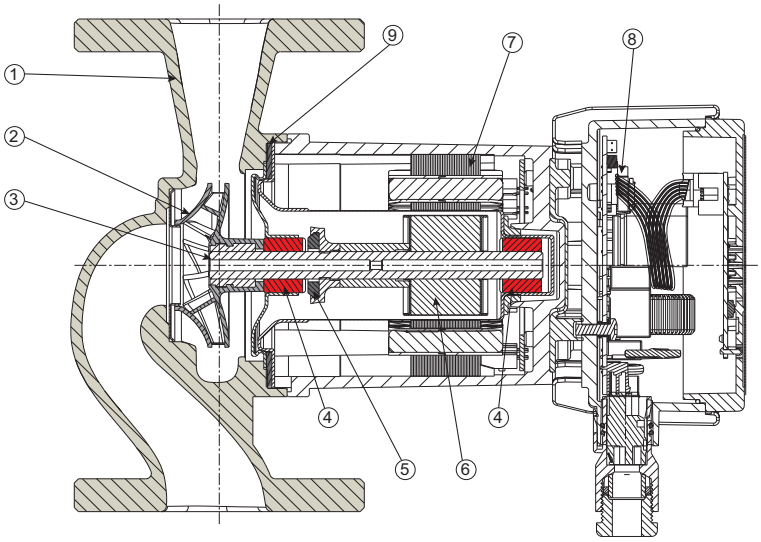

Characteristic curves

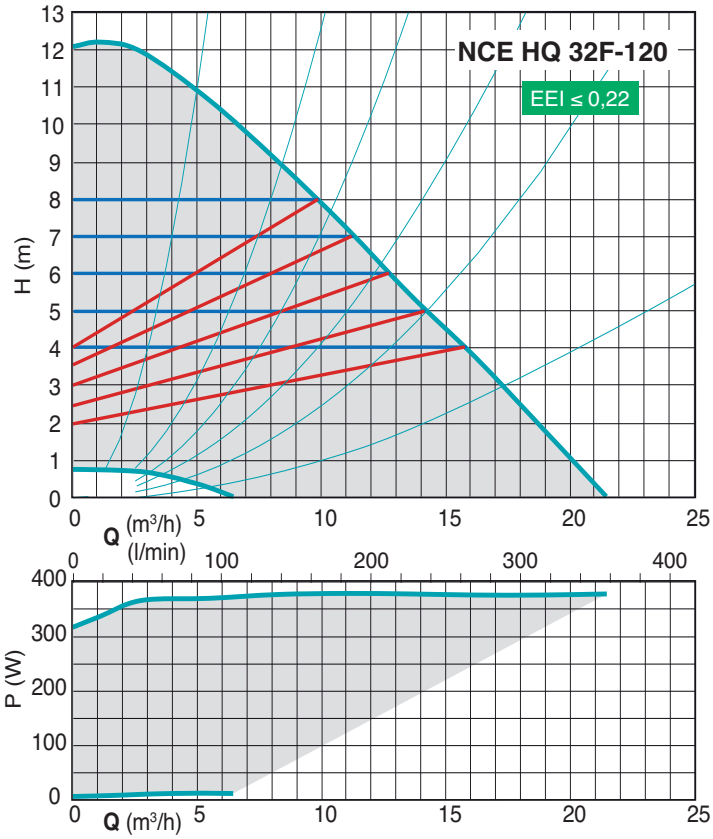

CALPEDA ROMANIA - INFINITY PUMPS SRL
Tel: 0268.33.47.47 / 0722.244.944
vanzari@calpeda.ro | www.calpeda.ro

NCE HQ.F

Energy saving circulating pumps with flanges

Characteristic curves

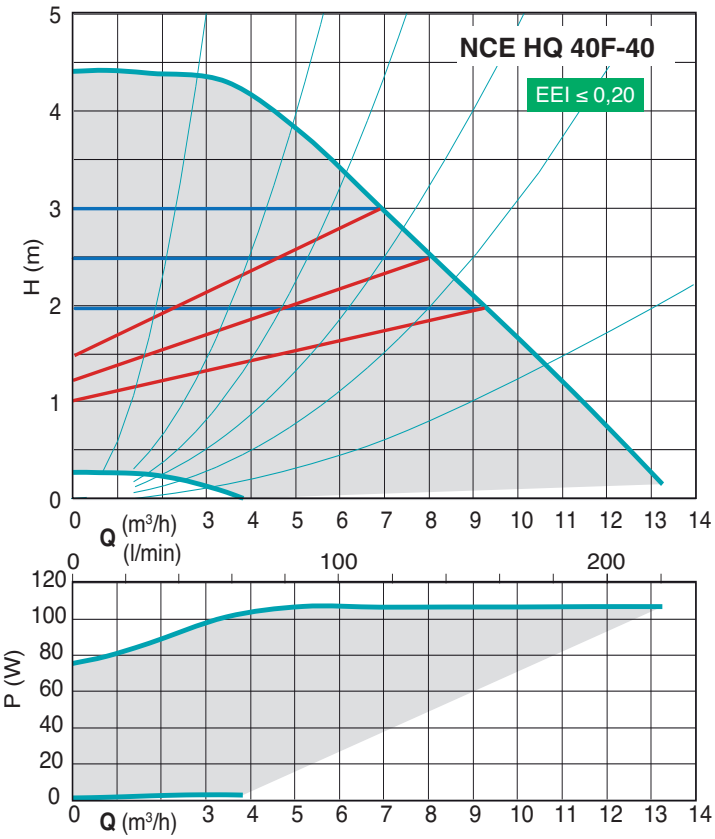

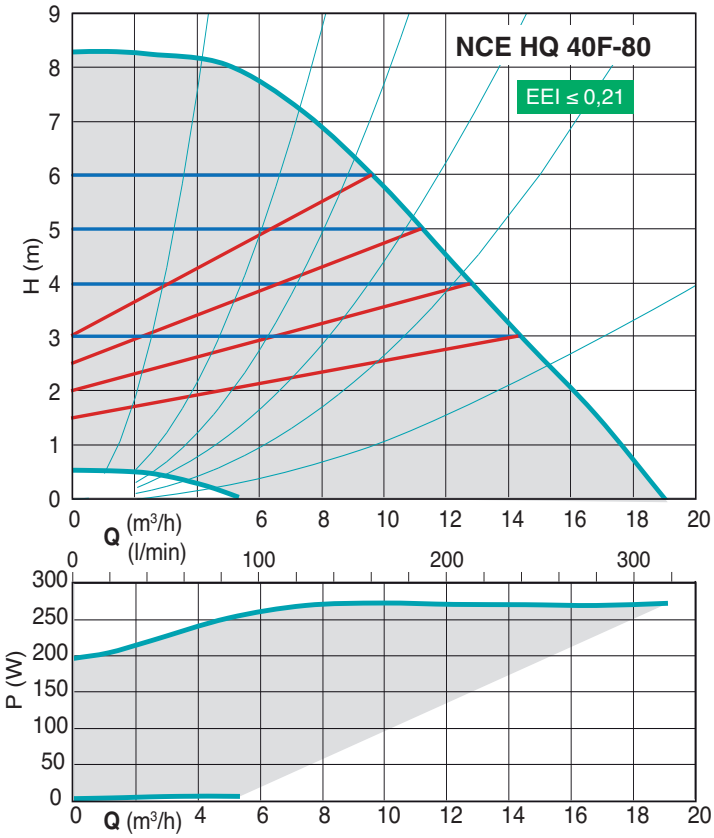

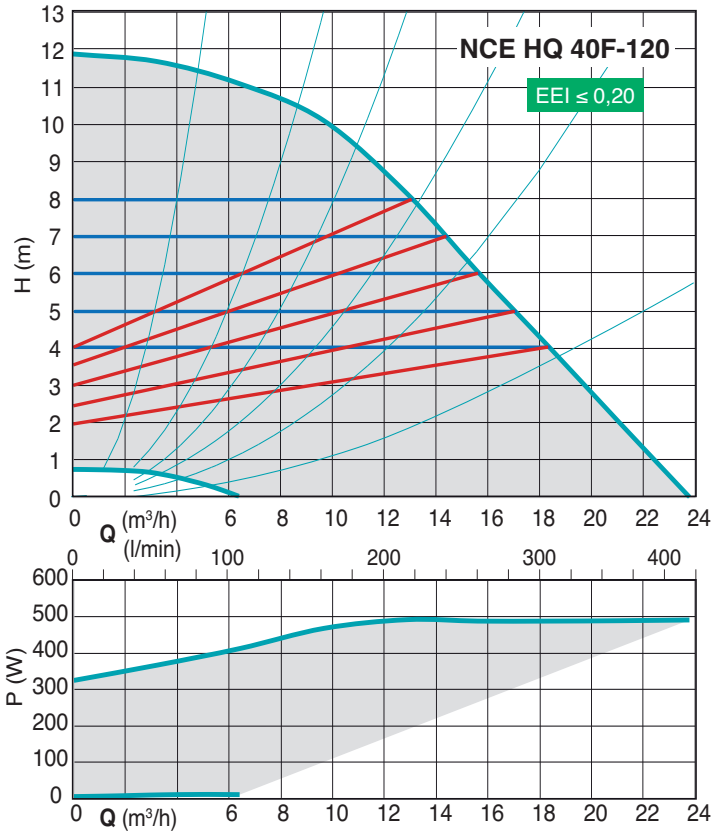

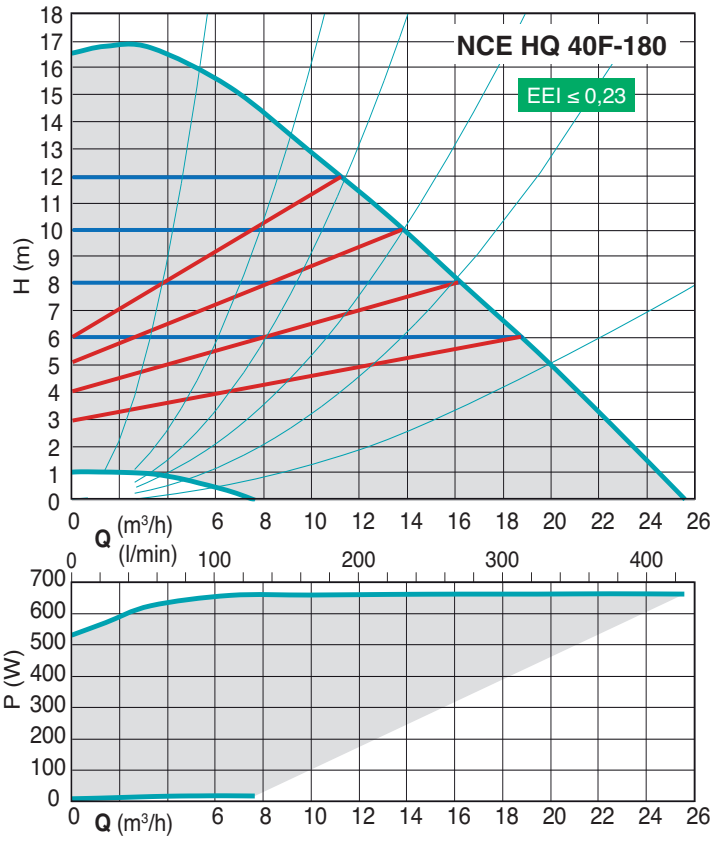

CALPEDA ROMANIA - INFINITY PUMPS SRL
Tel: 0268.33.47.47 / 0722.244.944
vanzari@calpeda.ro | www.calpeda.ro

NCE HQ.F

Energy saving circulating pumps with flanges

Characteristic curves

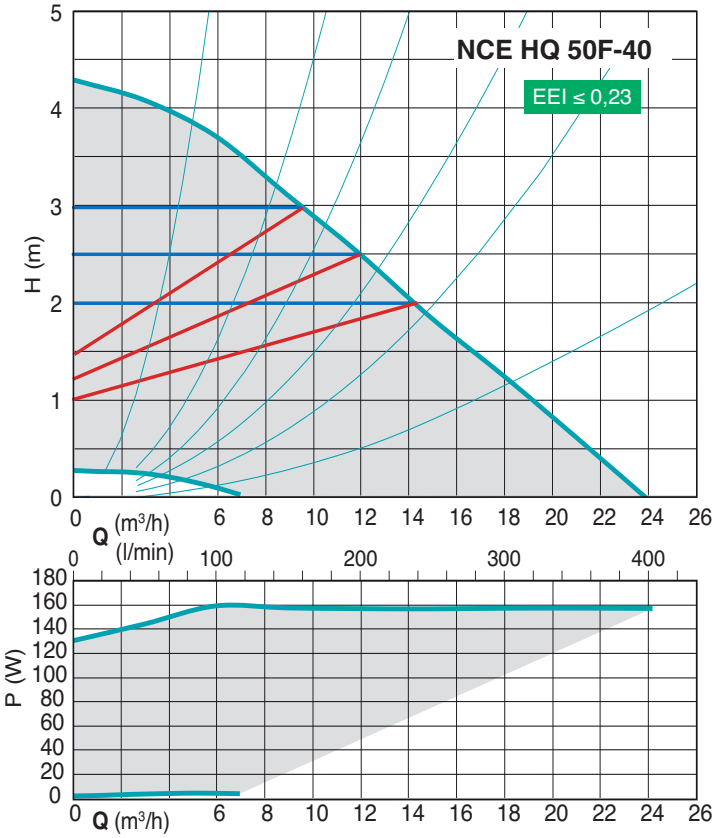

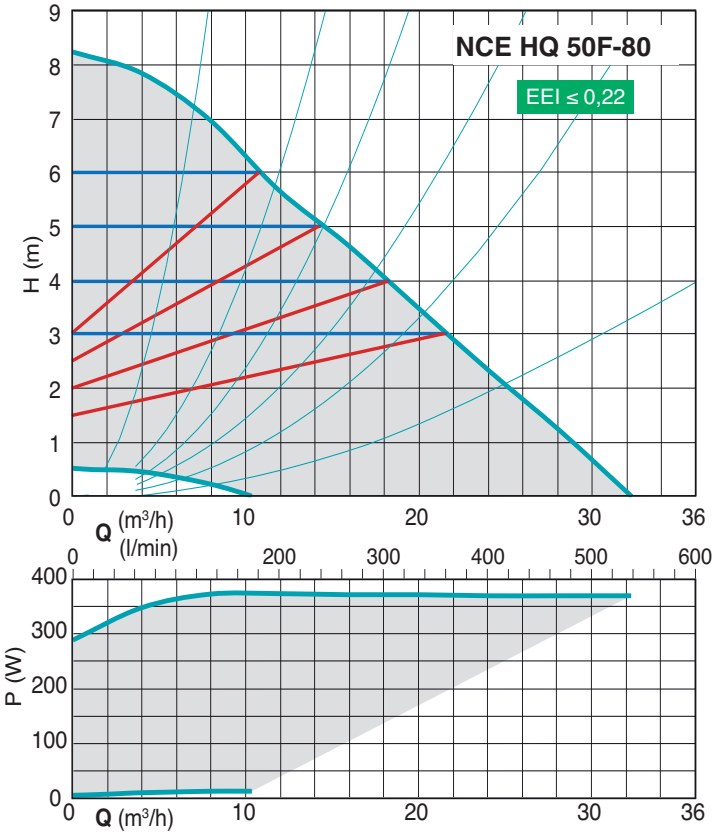

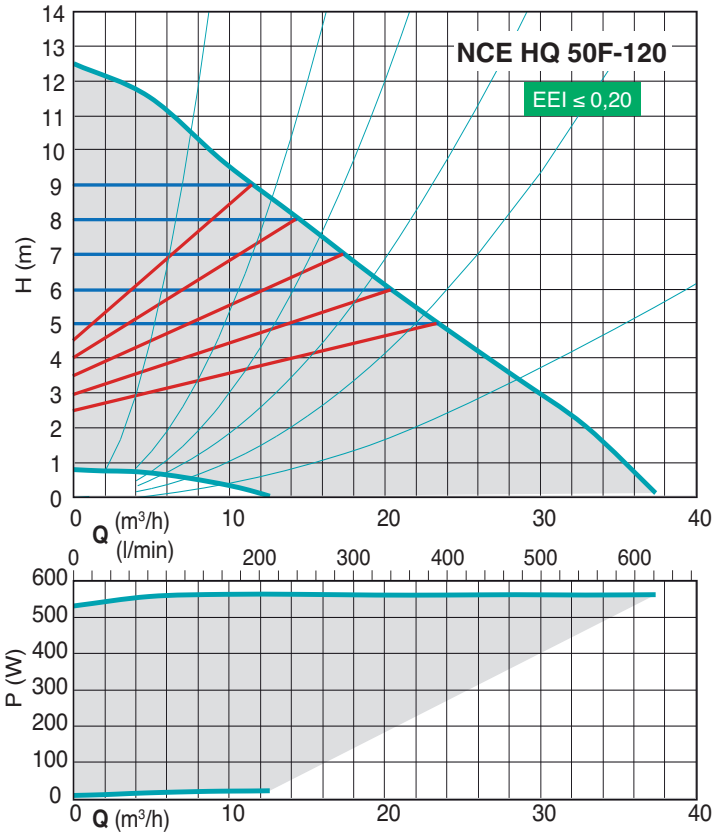

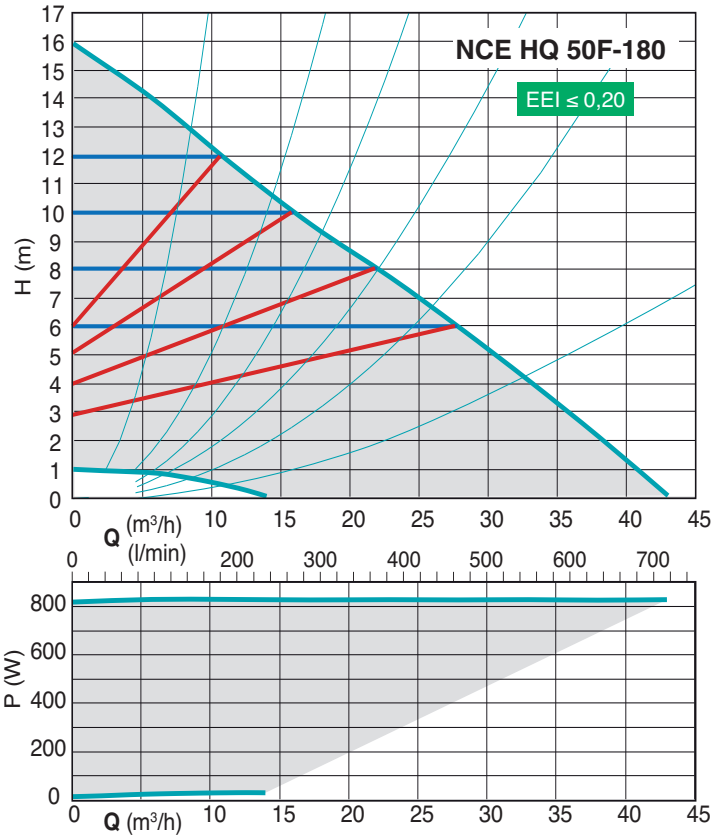

CALPEDA ROMANIA - INFINITY PUMPS SRL
Tel: 0268.33.47.47 / 0722.244.944
vanzari@calpeda.ro | www.calpeda.ro

NCE HQ.F

Energy saving circulating pumps with flanges

Characteristic curves

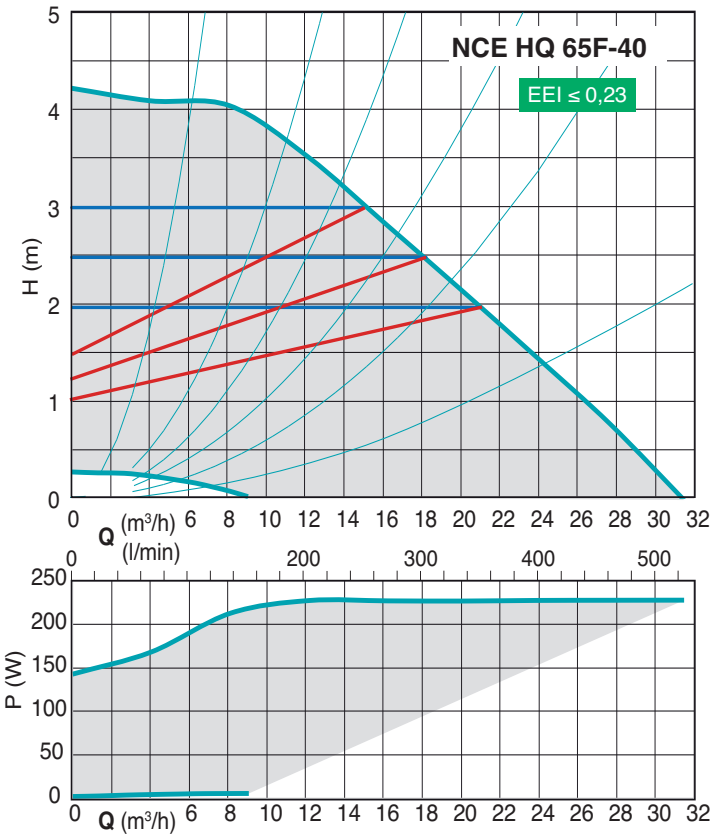

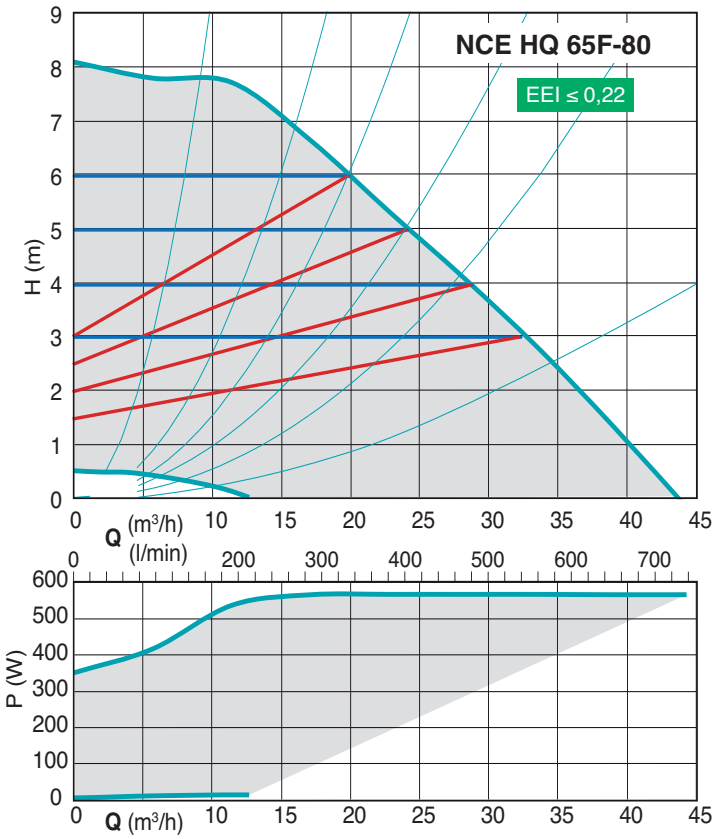

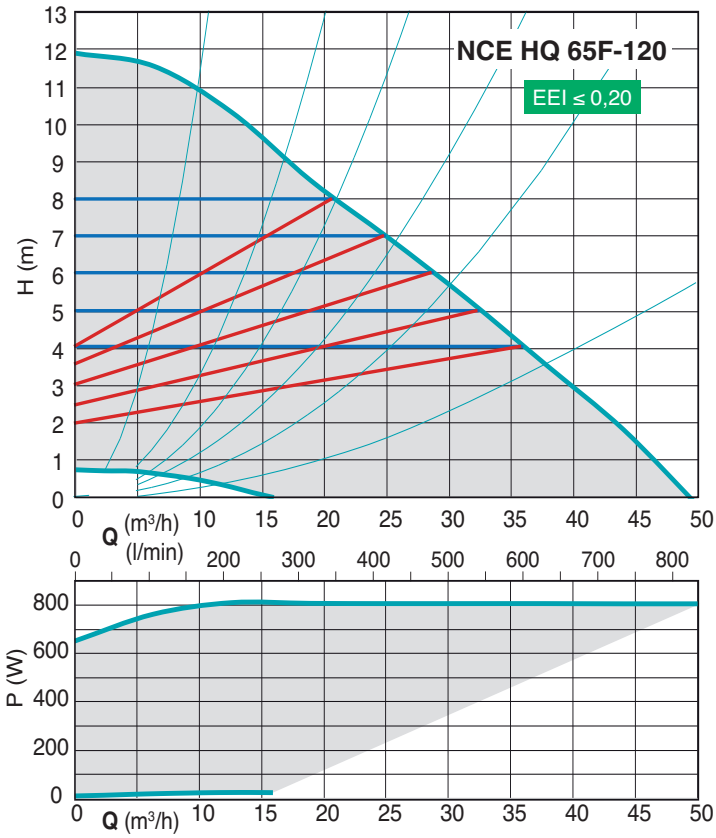

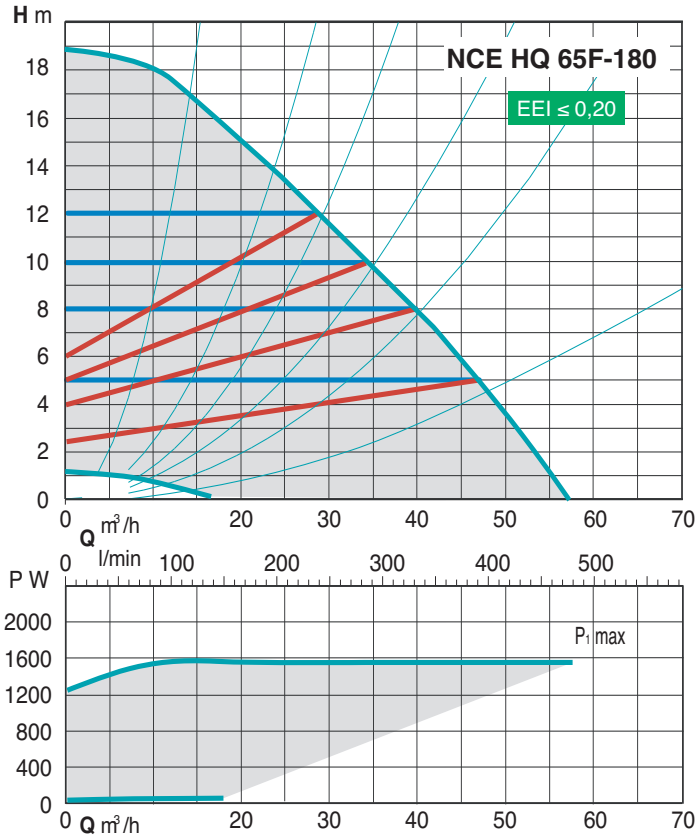

CALPEDA ROMANIA - INFINITY PUMPS SRL
Tel: 0268.33.47.47 / 0722.244.944
vanzari@calpeda.ro | www.calpeda.ro

NCE HQ.F

Energy saving twin circulating pumps with flanges

Characteristic curves

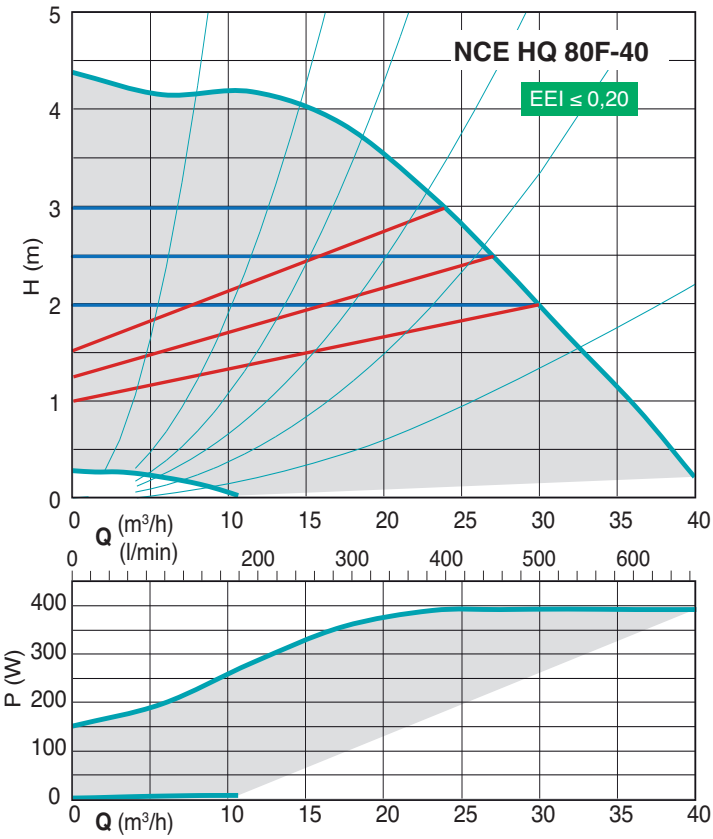

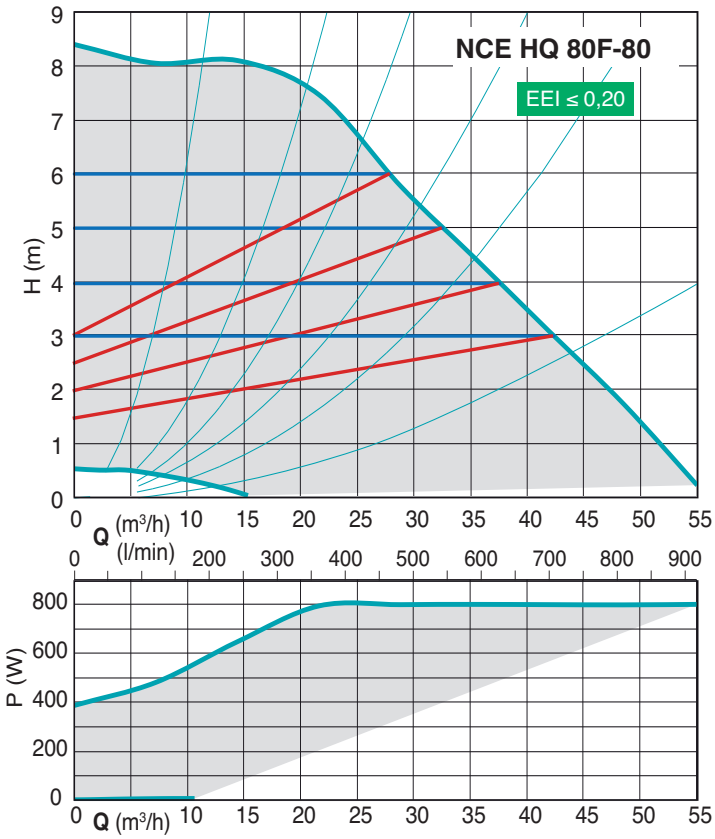

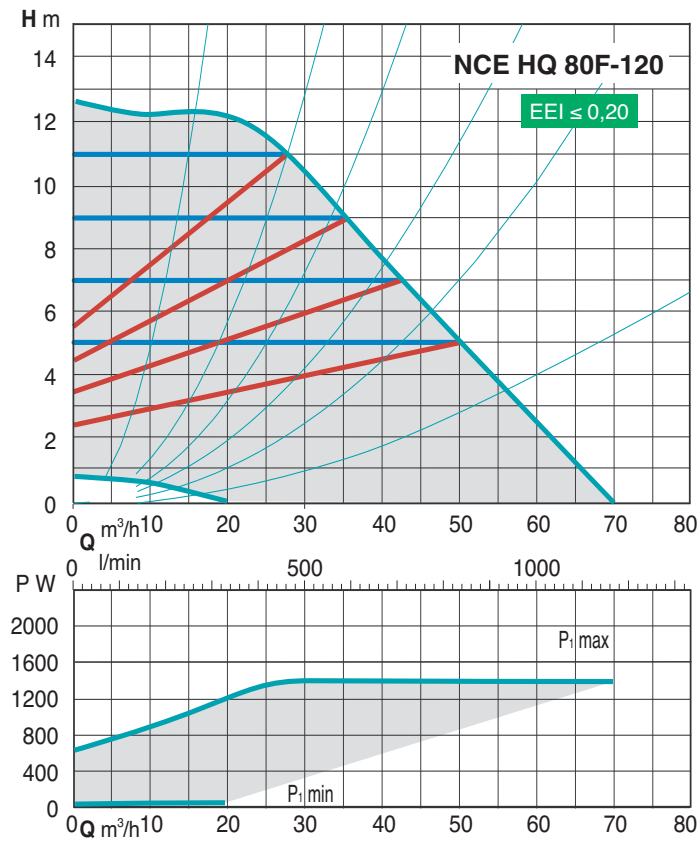

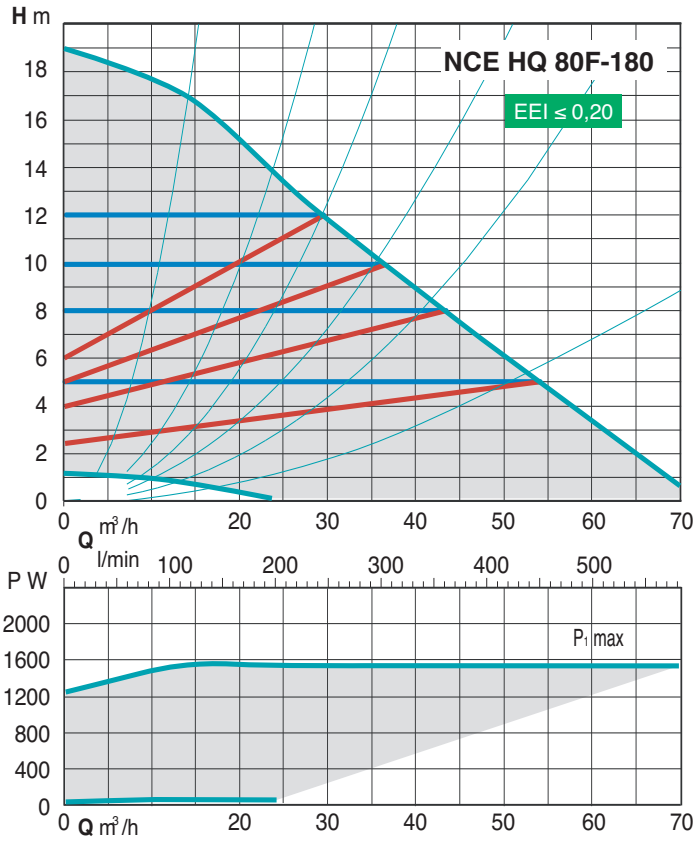

CALPEDA ROMANIA - INFINITY PUMPS SRL
Tel: 0268.33.47.47 / 0722.244.944
vanzari@calpeda.ro | www.calpeda.ro

NCE HQ.F

Energy saving circulating pumps with flanges

calpeda

Characteristic curves

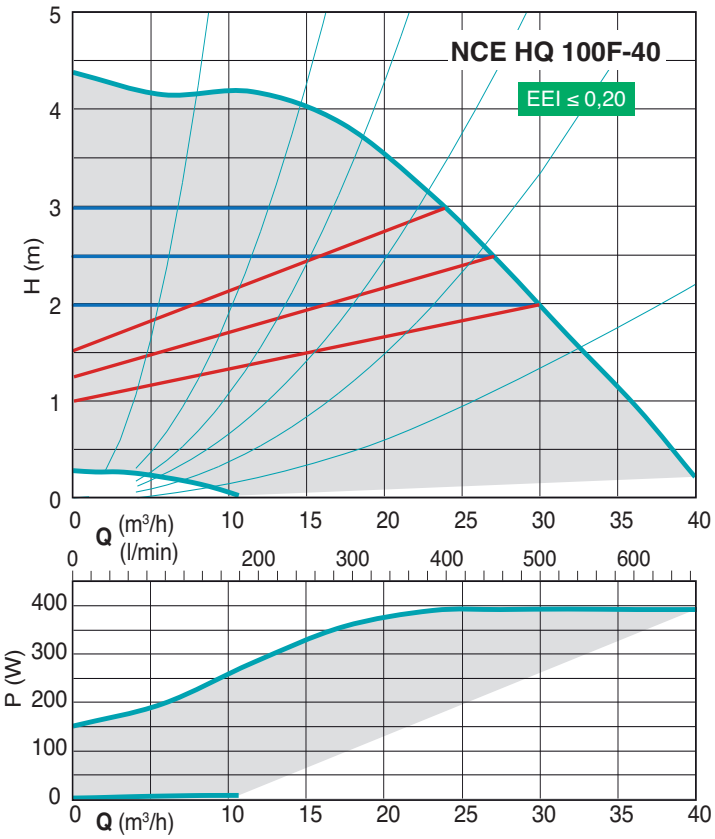

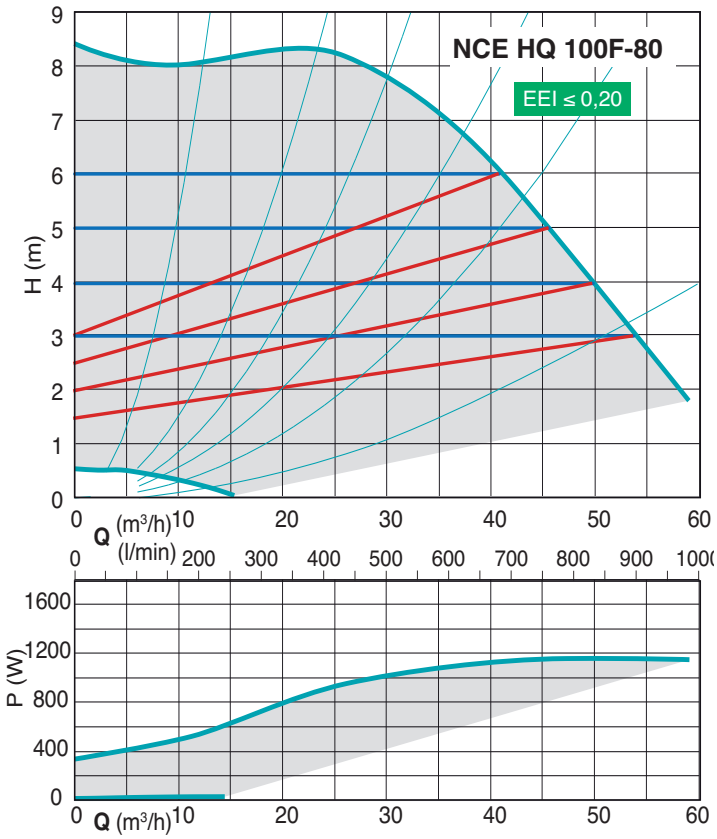

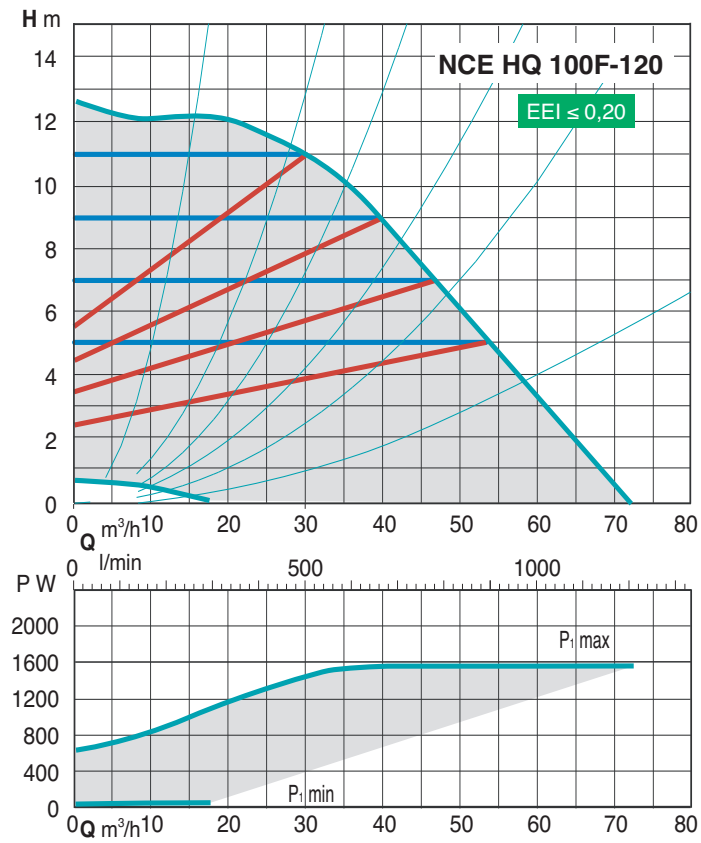

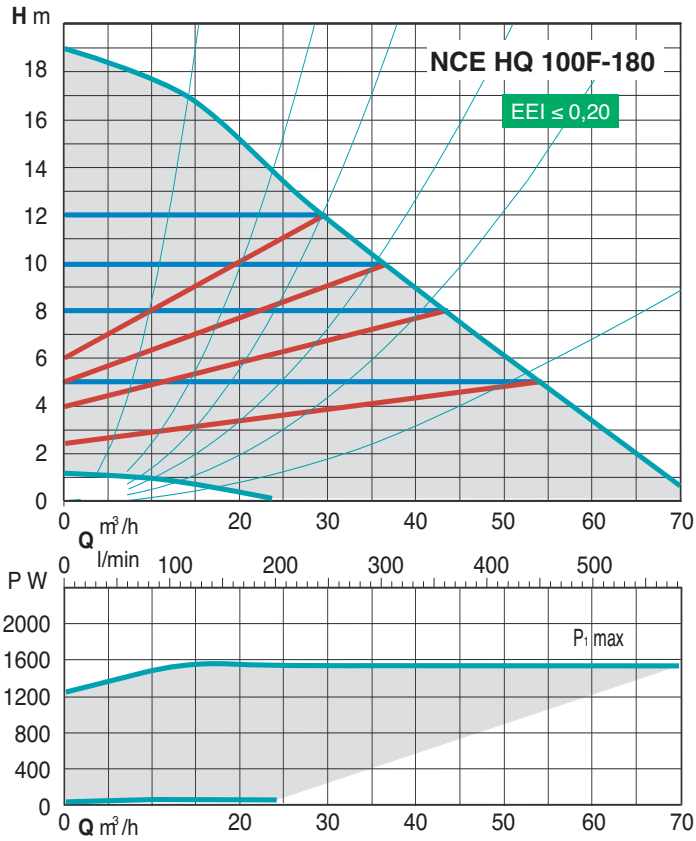

CALPEDA ROMANIA - INFINITY PUMPS SRL
Tel: 0268.33.47.47 / 0722.244.944
vanzari@calpeda.ro | www.calpeda.ro

NCE HQ.F

Energy saving circulating pumps with flanges

Dimensions and weights

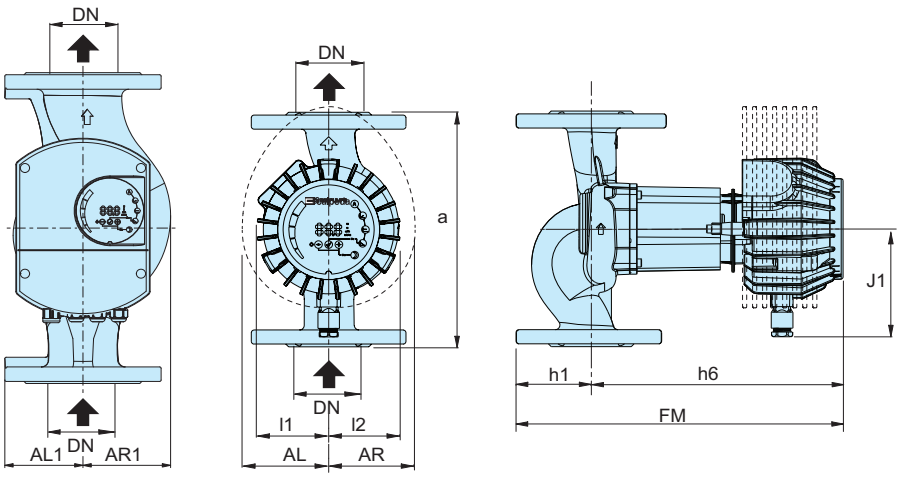

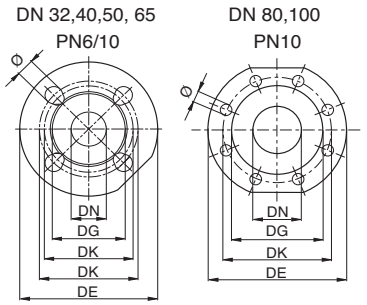

DN	DE	DK	DG	holes N.	holes Ø
32	140	90/100	74	4	14/19
40	150	100/110	80	4	14/19
50	165	110/125	90	4	14/19
65	185	130/145	110	4	14/19
80	200	160	148	8	19
100	220	180	166	8	19

TYPE	DN	H m	Q m³/h	1~ 230 V A max	P1 W max	a	J1	FM	h1	h6	l1	l2	AL	AR	AL1	AR1	kg
						mm											
NCE HQ 32F-120/220	32	12	19	1.8	370	220	115	330	65	265	75	75	-	-	-	-	9,1
NCE HQ 40F-40/250	40	4	13	1	110	250	99	270	65	205	59	74	-	-	-	-	8,2
NCE HQ 40F-80/250	40	8	19	1.3	270	250	115	330	65	265	75	75	-	-	-	-	9,6
NCE HQ 40F-120/250	40	12	24	2.3	480	250	115	330	65	265	75	75	-	-	-	-	9,95
NCE HQ 40F-180/250	40	18	25	3.4	680	250	115	330	65	265	-	-	90	90	-	-	14,2
NCE HQ 50F-40/280	50	4	23	1.3	160	280	99	313	65	241	74	92	-	-	-	-	10,8
NCE HQ 50F-80/280	50	8	32	1.7	370	280	115	373	72	301	75	92	-	-	-	-	12,35
NCE HQ 50F-120/280	50	12	36	2.5	560	280	115	373	72	301	75	92	-	-	-	-	13
NCE HQ 50F-180/280	50	18	42	3.6	830	280	115	383	72	311	-	-	92	90	-	-	15,9
NCE HQ 65F-40/340	65	4	31	1.1	230	340	115	386	75	311	83	100	-	-	-	-	15,95
NCE HQ 65F-80/340	65	8	43	2.6	560	340	115	386	75	311	83	103	-	-	-	-	16,65
NCE HQ 65F-120/340	65	12	50	3.5	810	340	115	397	75	322	-	103	90	-	-	-	19,3
NCE HQ 65F-180/340	65	18	57	6,6	1550	340	137	434	75	359	-	-	-	-	94,5	104	-
NCE HQ 80F-40/360	80	4	40	1.8	390	360	115	414	93	321	98	123	-	-	-	-	23,4
NCE HQ 80F-80/360	80	8	53	3.5	800	360	115	425	93	332	98	123	-	-	-	-	25,8
NCE HQ 80F-120/360	80	12	69	6,0	1400	360	137	462	93	369	-	-	-	-	98,5	124	-
NCE HQ 80F-180/360	80	18	72	6,6	1550	360	137	462	93	369	-	-	-	-	98,5	124	-
NCE HQ 100F-40/450	100	4	40	2.4	550	450	115	424	103	321	98	123	-	-	-	-	-
NCE HQ 100F-80/450	100	8	59	4,7	1150	450	137	472	103	369	-	-	-	-	110	124	-
NCE HQ 100F-120/450	100	12	72	6,6	1550	450	137	472	103	369	-	-	-	-	110	124	-
NCE HQ 100F-180/450	100	18	72	6,6	1550	450	137	472	103	369	-		-	-	110	124	-

Examples of installations

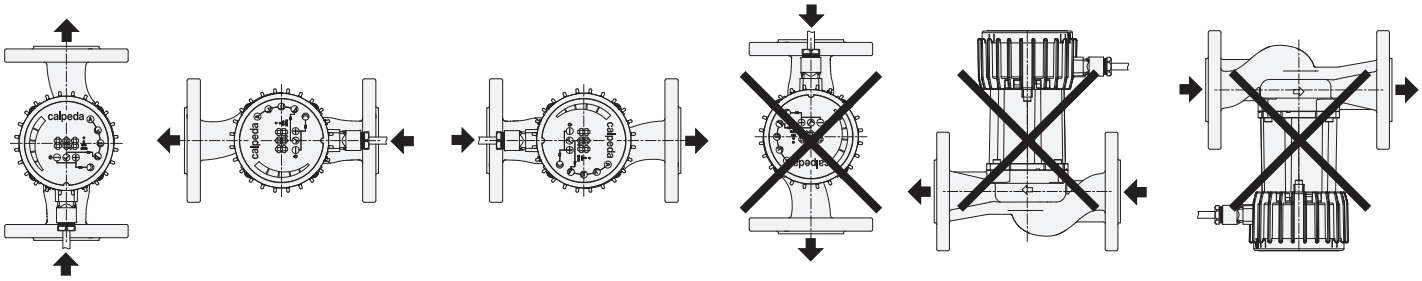

CALPEDA ROMANIA - INFINITY PUMPS SRL
Tel: 0268.33.47.47 / 0722.244.944
vanzari@calpeda.ro | www.calpeda.ro

NCED HQ.F

Energy saving twin circulating pumps with flanges

Construction

Energy saving variable speed circulating pump driven by a permanent magnet synchronous motor (pm) controlled by on board inverter.

Digital input and output:
- Modbus
- Eternet
- analog input 0-10V
- remote on/off input
- output relay

Applications

Heating and conditioning systems.

Operating conditions

- Liquid temperature from +2 °C to +110 °C
- Ambient temperature from 0 °C to +40 °C
- Maximum permissible working pressure: 10 bar
- Storage: -20°C/+70°C max. relative humidity 95% at 40 °C
- Certifications: in conformity with CE requirements
- Sound pressure ≤ 40 dB (A).
- Minimum suction pressure: - 0,05 bar at 75 °C
  - 0,28 bar a 90 °C.
- Maximum glycol quantity: 20%.
- EMC according to: EN 55014-1, EN 55014-2
  EN 61000-3-2, EN 61000-3-2.
- Connections: Flanges according to PN 6/10, EN 1092-2, DN 32,40,50,65,80,100.
- The benchmark for most efficient circulators is EEI ≤ 0,20.

Designation

NCE D HQ 40 F - 120 / 250

- Series
- Twin pumps version
- Version
- DN ports in mm
- With flanges
- Max. head in dm
- connection size mm

Motor

Synchronous motor with permanent magnet.
- Motor: variable speed
- Standard voltage: single-phase 230 V (-10%;+6%)
- Frequency: 50/60 Hz
- Protection: IP 44
- Insulation class: F
- Overload protection (integrated).
- Cable: phases and neutral.
- Constructed in accordance with: EN 60335-1, EN 60335-2-51.

Features

Smart pump

NCED HQ.F adapt its functions to the system: the circulator measures the pressure and the flow and adjusts the speed to the selected pressure.

Easy use

There are different operating modes selectable from the control panel.

CALPEDA ROMANIA - INFINITY PUMPS SRL
Tel: 0268.33.47.47 / 0722.244.944
vanzari@calpeda.ro | www.calpeda.ro

NCED HQ.F

Energy saving twin circulating pumps with flanges

Operating modes

Automatic mode
(factory setting):
In this mode the pump automatically sets the operating pressure, depending on the hydraulic system. This mode is recommended in most systems.

Proportional pressure mode:
The circulator changes the pressure propotionally to the current flow.
The pressure value can be adjusted with the **+** and **–** buttons.

Constant pressure mode:
The circulator mantains the pressure constant when the reference flow changes.
The pressure value can be adjusted with the **+** and **–** buttons.

Fixed speed mode:
The circulator works with constant curve and the curve could be changed using **+** e **–** buttons.

Night mode:.
When the liquid temperature fall by 15-20°C the pump automatically swiches to night mode, in practice the circulator works at minimum curve.
When the temperature rises again the pump comes back to the selected mode
The night mode could be selected with any operating mode.

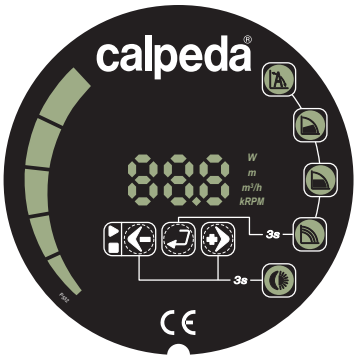

Operating mode-control panel

NCED HQ.F could works in:
- automatic mode
- proportional pressure mode
- constant pressure mode
- fixed speed mode
- night mode

The night mode could be selected with any operating mode.

Coverage chart

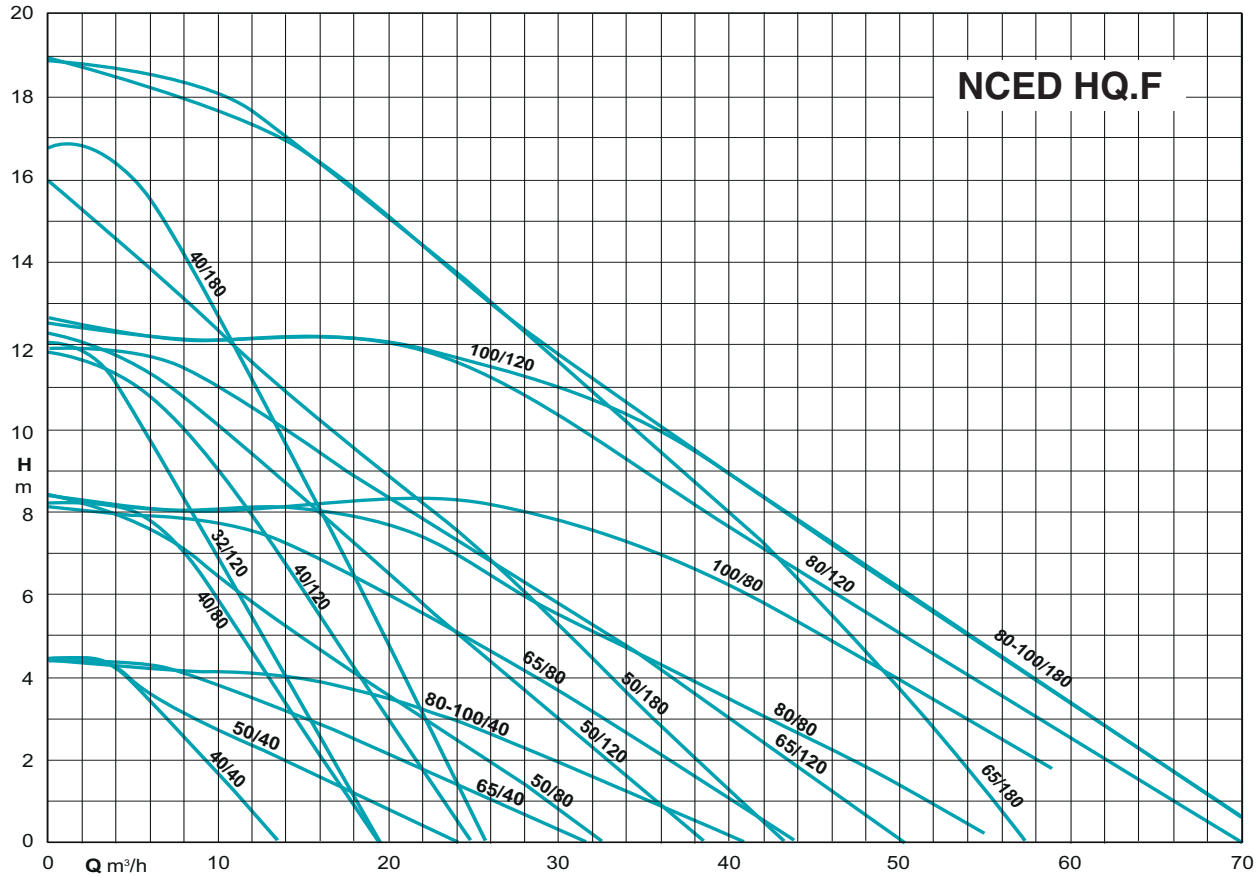

CALPEDA ROMANIA - INFINITY PUMPS SRL
Tel: 0268.33.47.47 / 0722.244.944
vanzari@calpeda.ro | www.calpeda.ro

NCED HQ.F

Energy saving twin circulating pumps with flanges

Materials

Component	Pos.	Material
Pump casing	1	Cast iron GJL 200 EN 1561
Impeller	2	Composite
Shaft	3	Stainless steel
Bearings	4	Carbon
Thrust bearing	5	Ceramic
Rotor	6	Stainless steel jacket
Winding	7	Copper wire
Electronic card	8	-
Gasket	9	EPDM

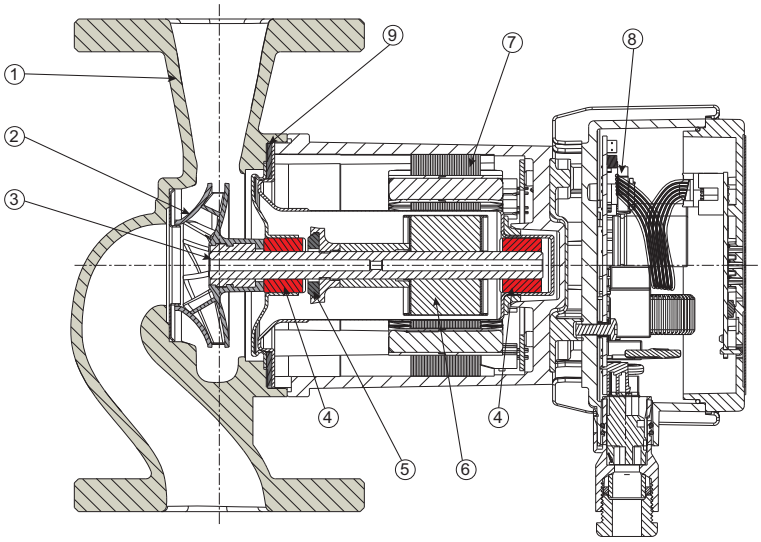

Characteristic curves

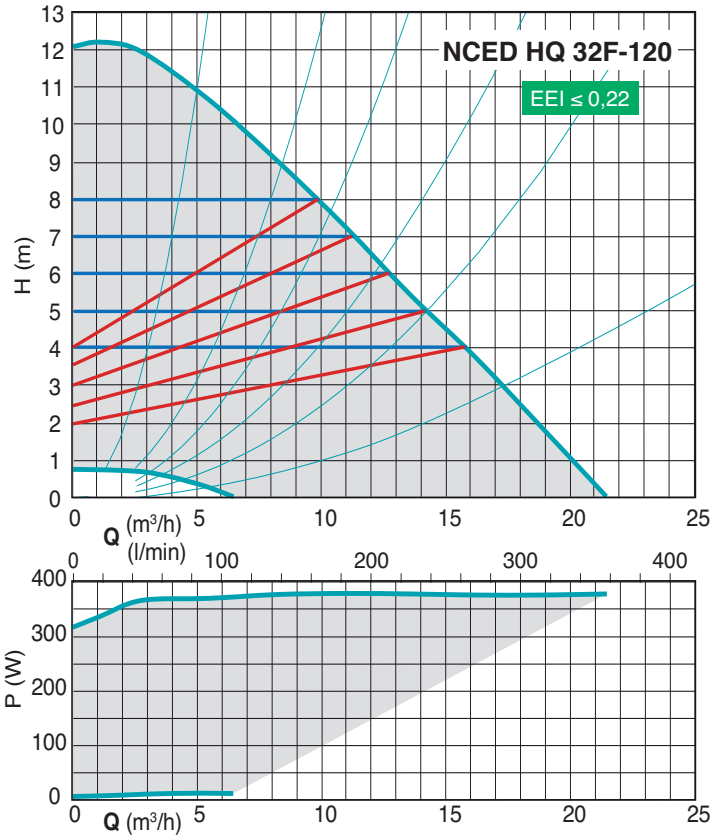

CALPEDA ROMANIA - INFINITY PUMPS SRL
Tel: 0268.33.47.47 / 0722.244.944
vanzari@calpeda.ro | www.calpeda.ro

NCED HQ.F

Energy saving twin circulating pumps with flanges

Characteristic curves

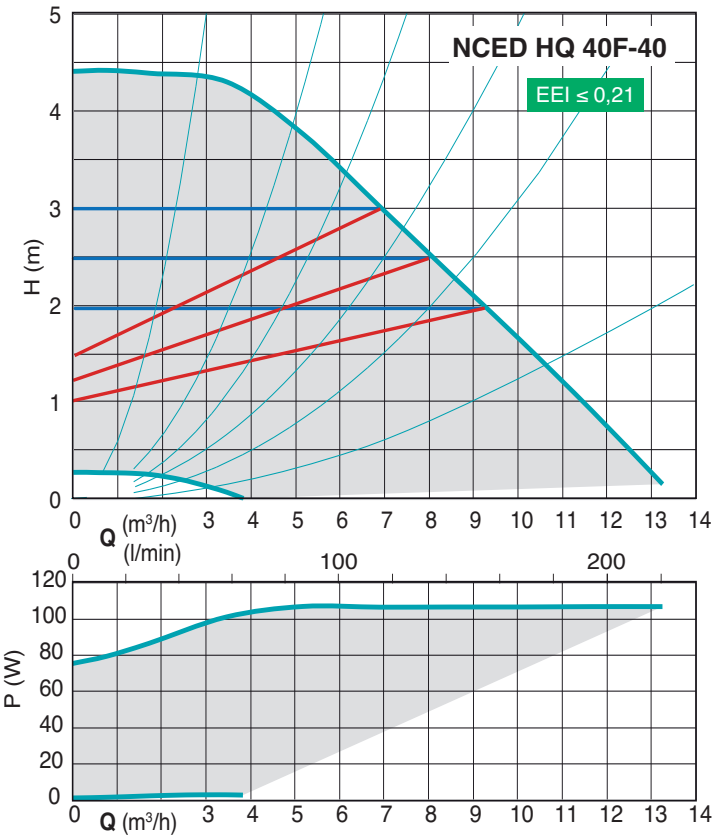

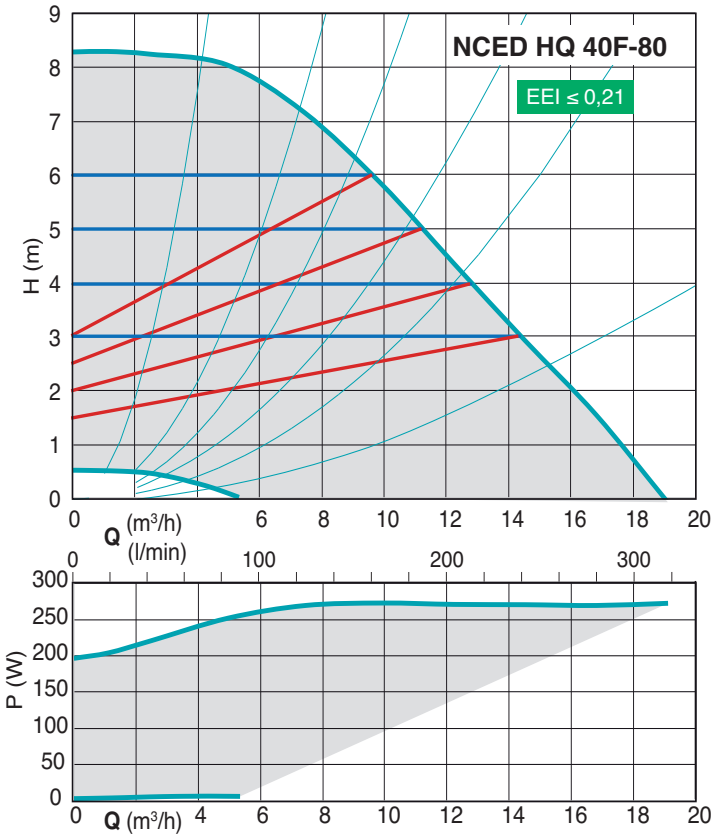

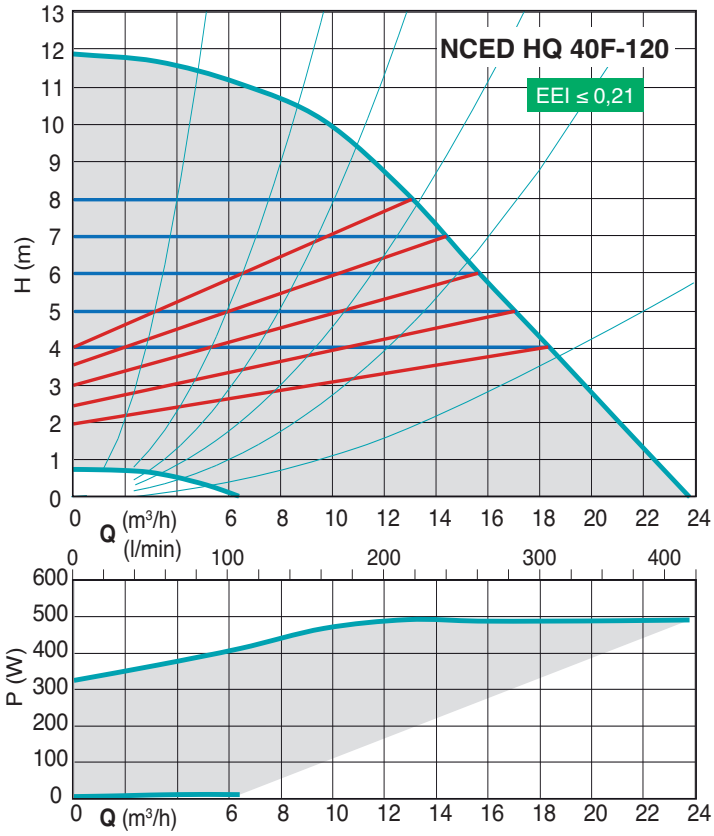

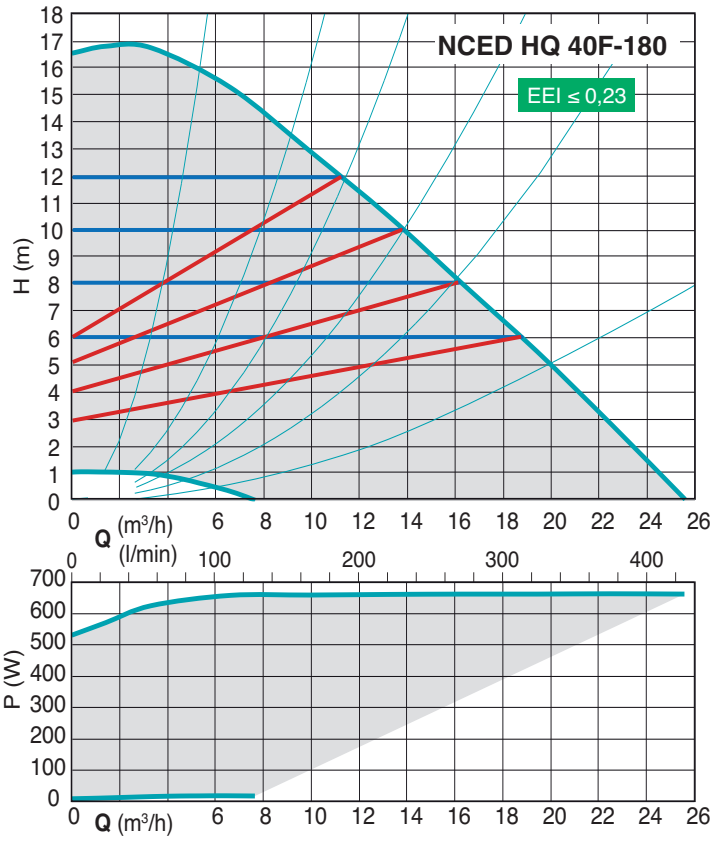

CALPEDA ROMANIA - INFINITY PUMPS SRL
Tel: 0268.33.47.47 / 0722.244.944
vanzari@calpeda.ro | www.calpeda.ro

NCED HQ.F

Energy saving twin circulating pumps with flanges

Characteristic curves

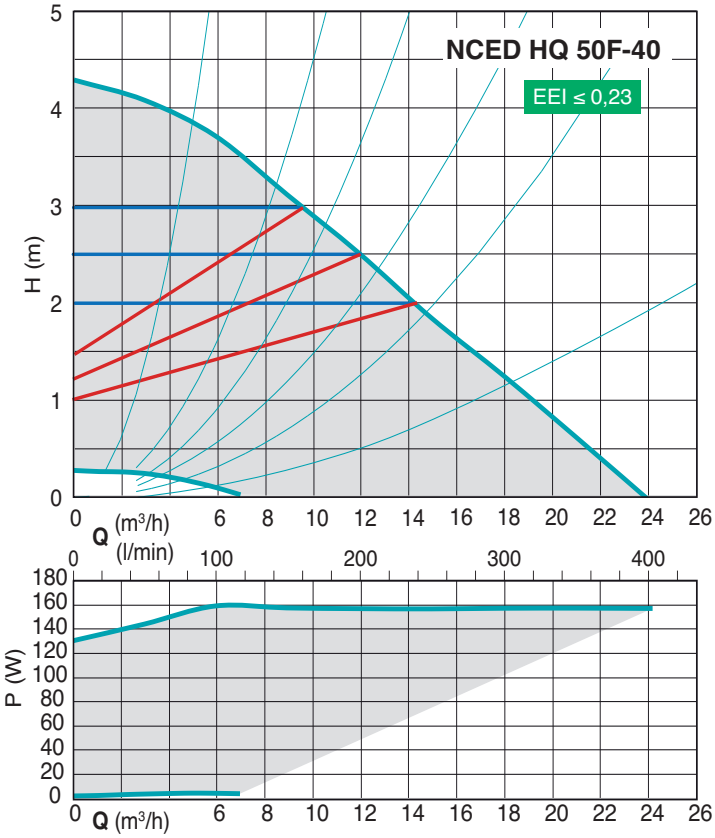

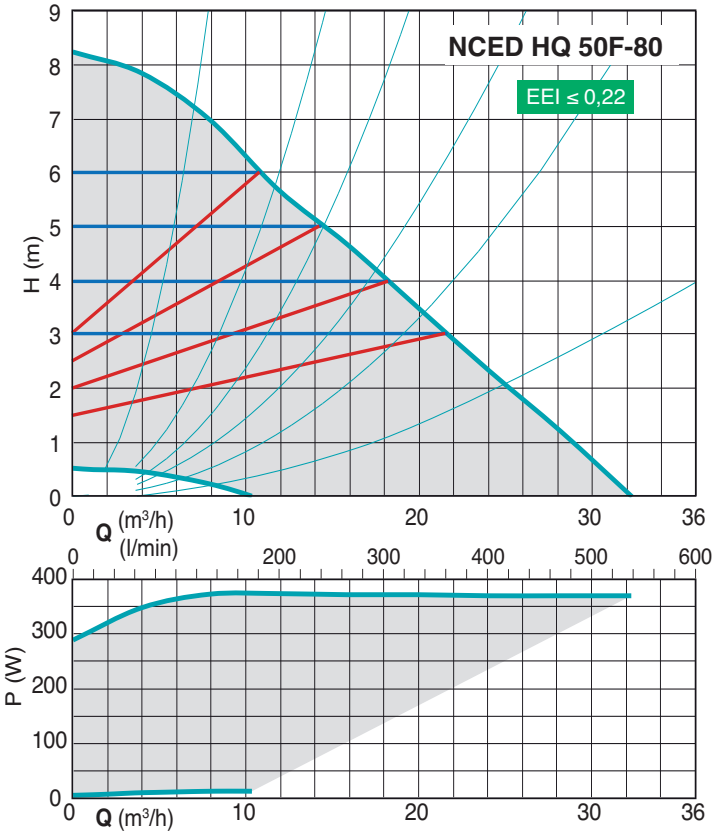

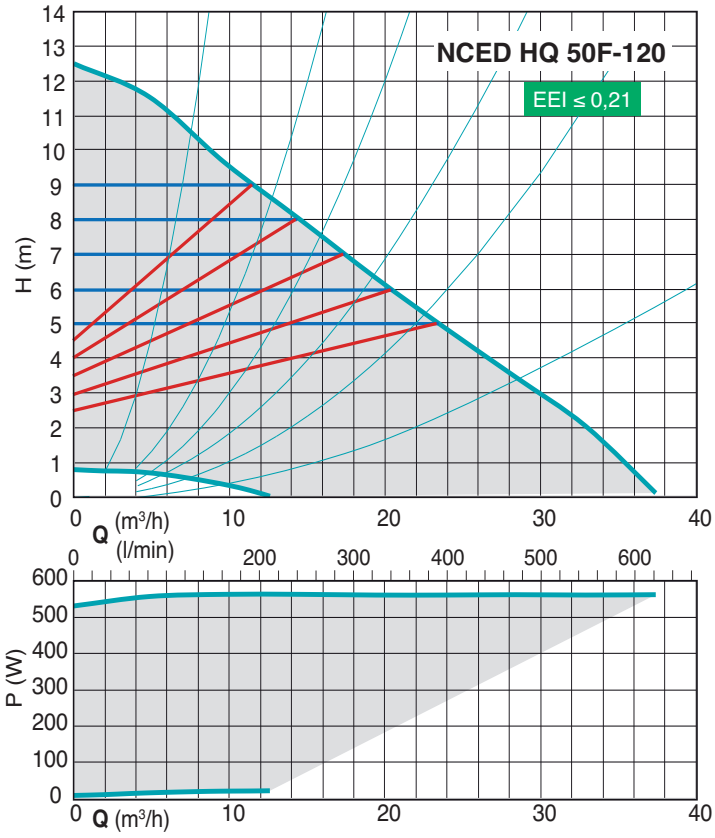

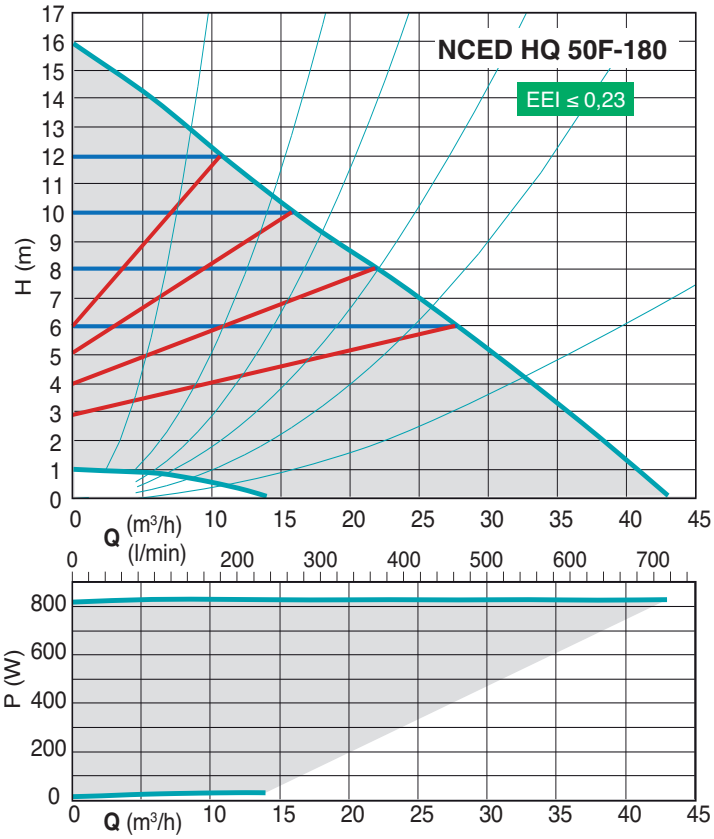

CALPEDA ROMANIA - INFINITY PUMPS SRL
Tel: 0268.33.47.47 / 0722.244.944
vanzari@calpeda.ro | www.calpeda.ro

NCED HQ.F

Energy saving twin circulating pumps with flanges

Characteristic curves

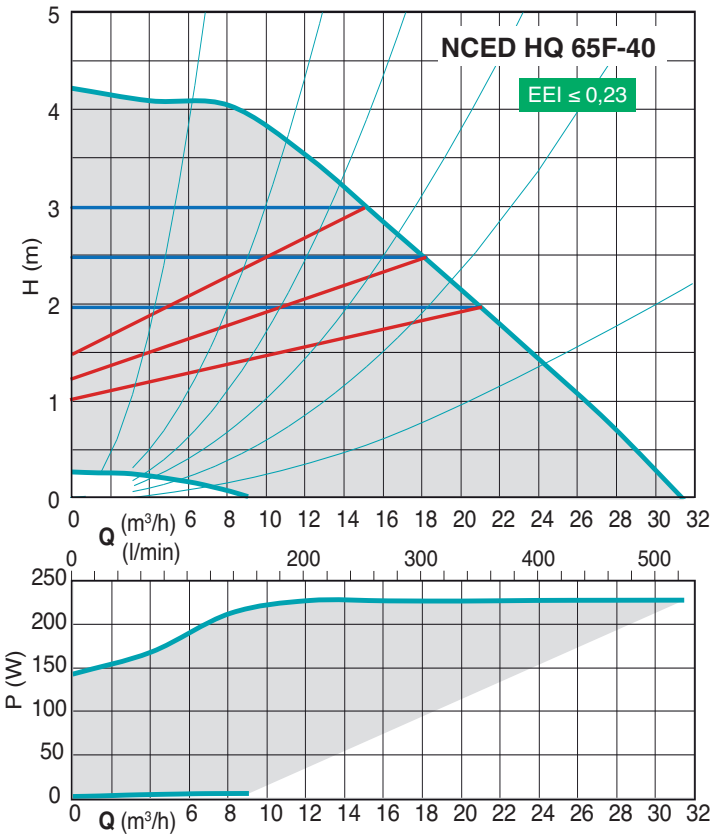

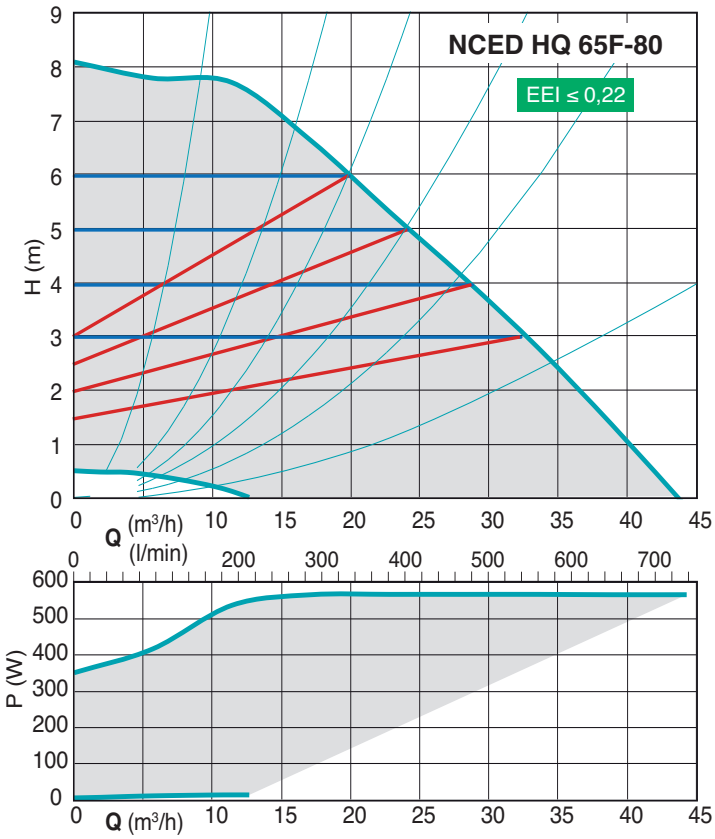

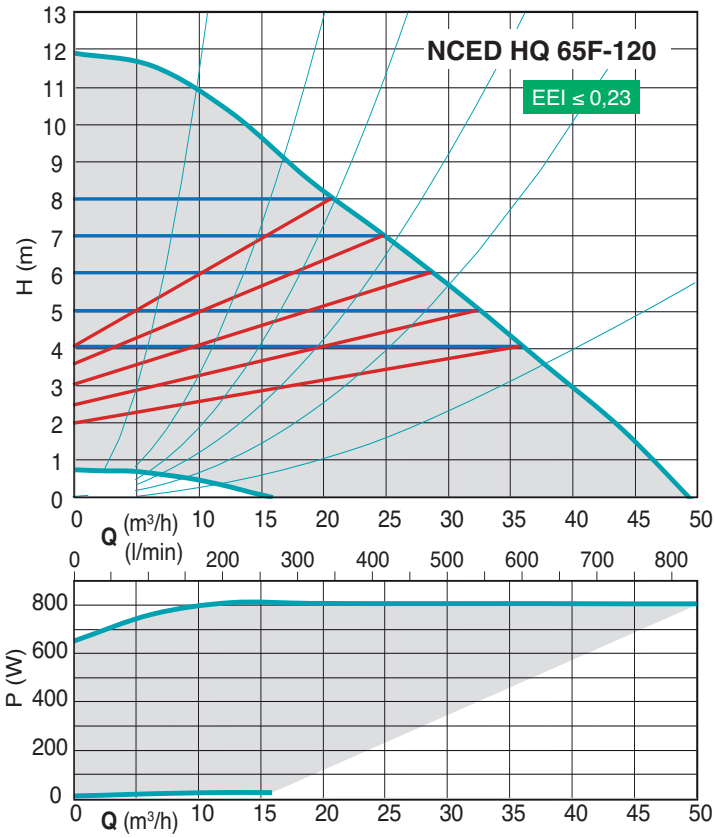

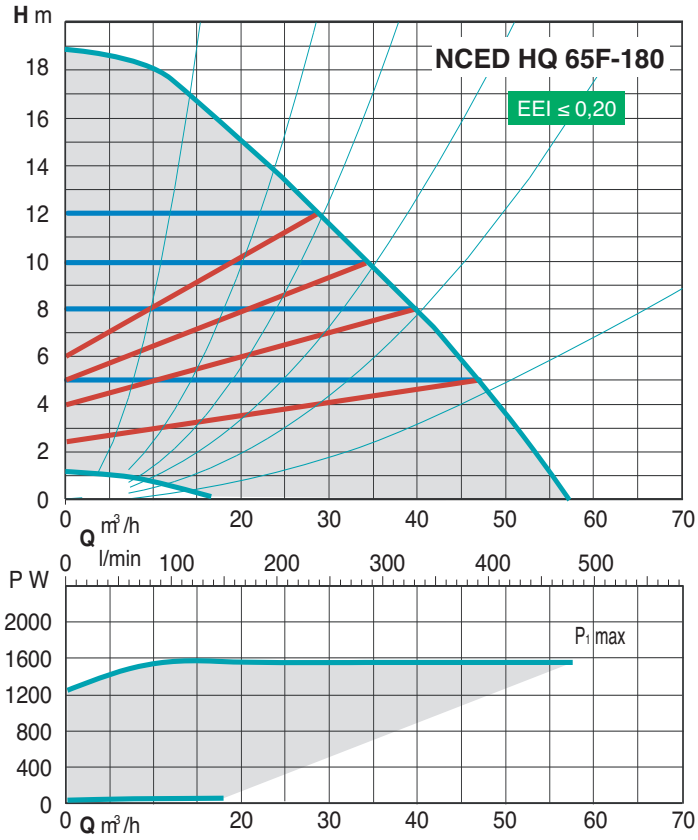

CALPEDA ROMANIA - INFINITY PUMPS SRL
Tel: 0268.33.47.47 / 0722.244.944
vanzari@calpeda.ro | www.calpeda.ro

NCED HQ.F

Energy saving twin circulating pumps with flanges

Characteristic curves

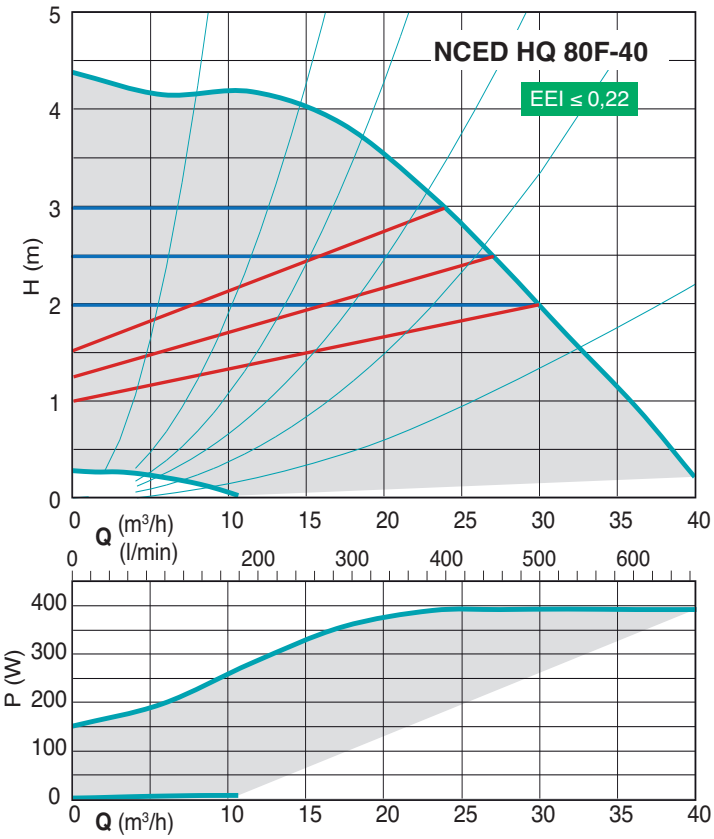

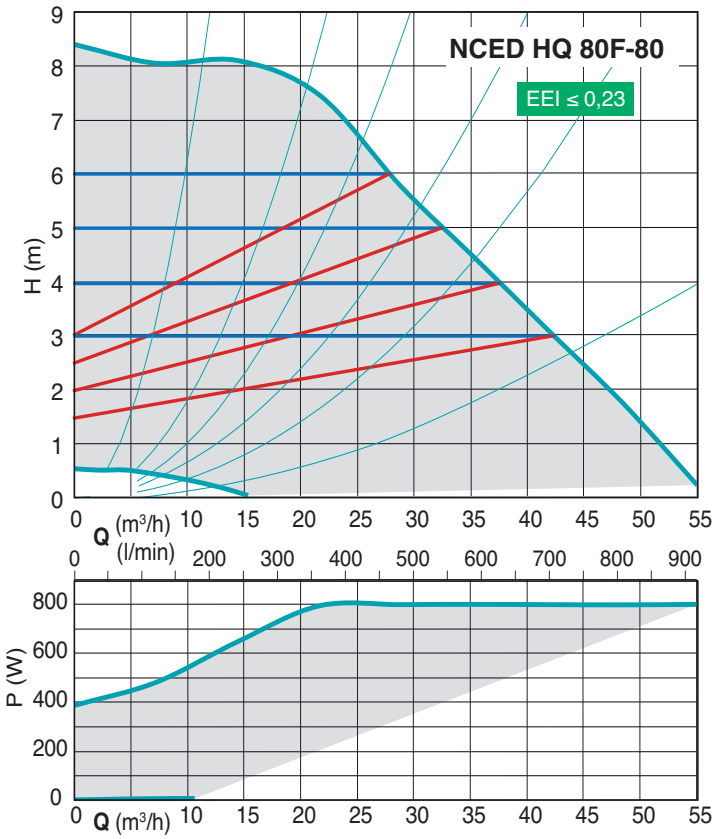

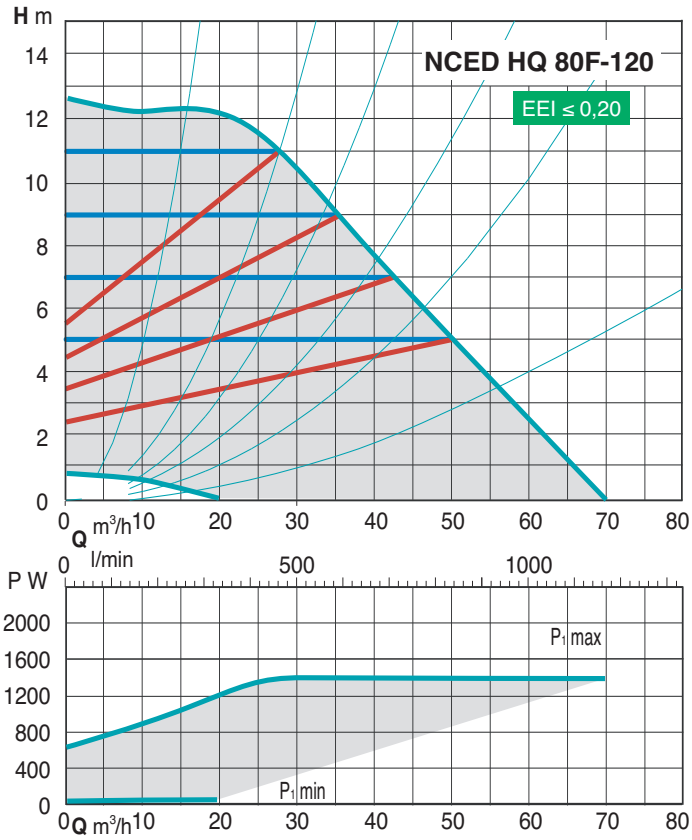

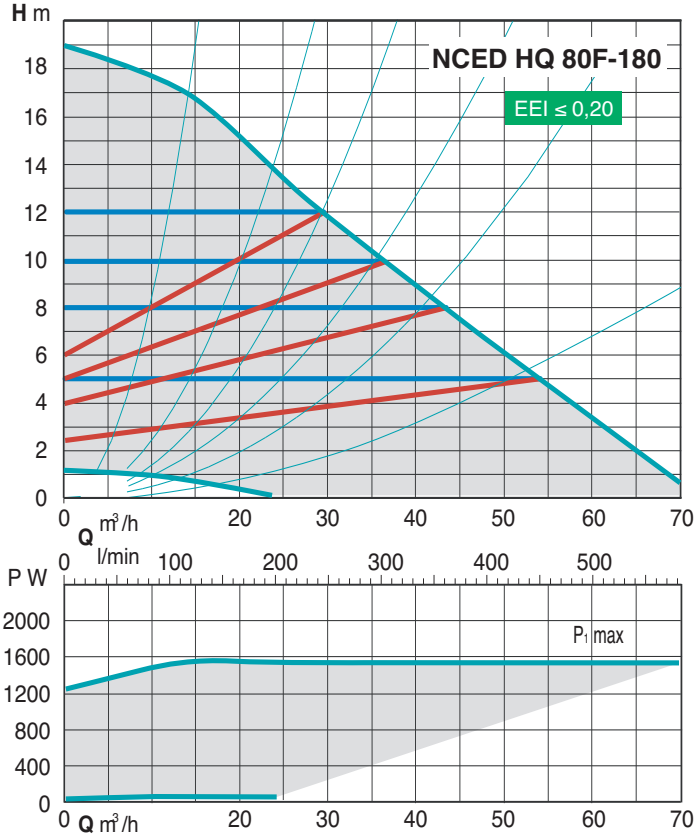

CALPEDA ROMANIA - INFINITY PUMPS SRL
Tel: 0268.33.47.47 / 0722.244.944
vanzari@calpeda.ro | www.calpeda.ro

NCED HQ.F

Energy saving twin circulating pumps with flanges

Characteristic curves

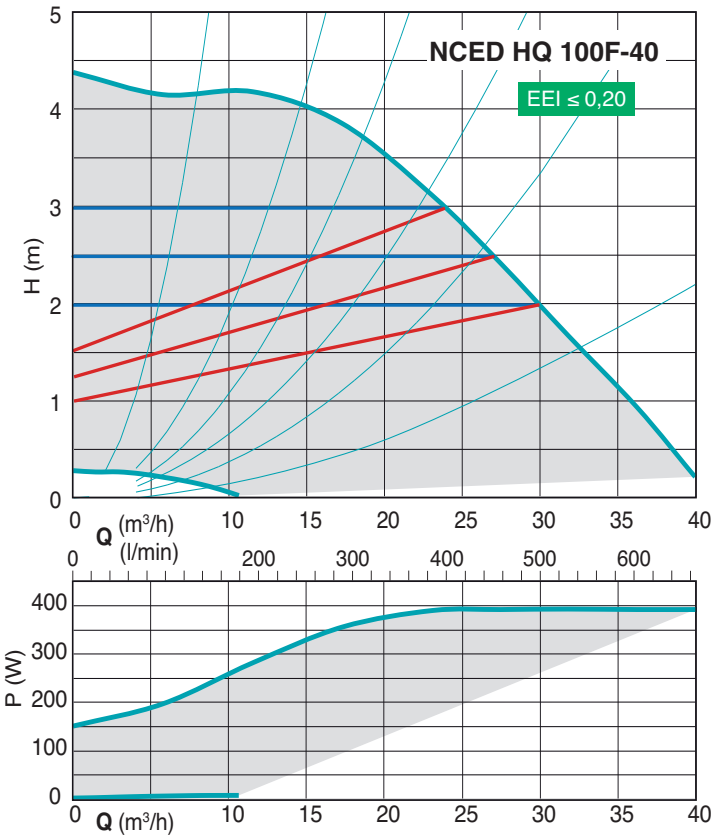

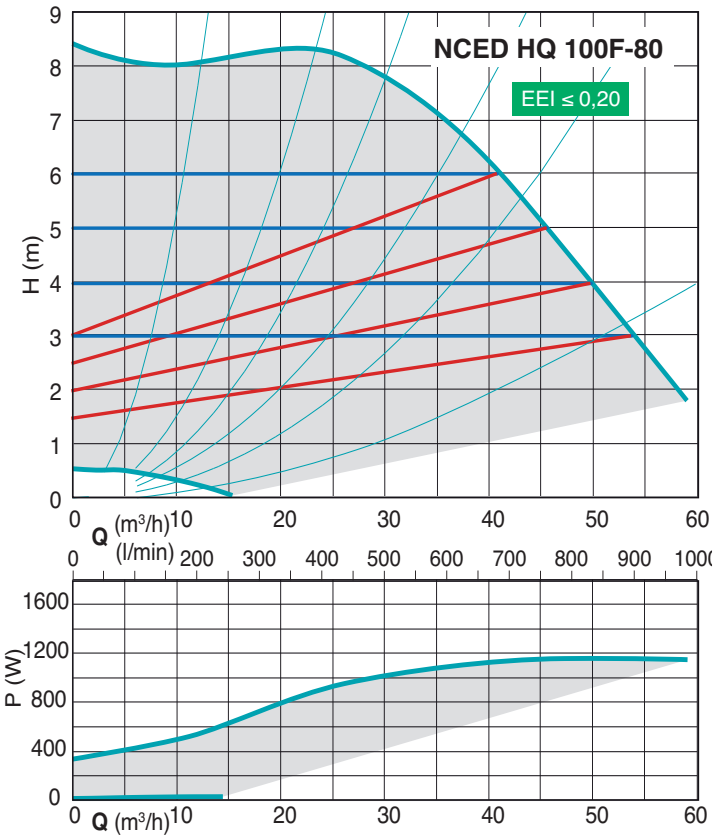

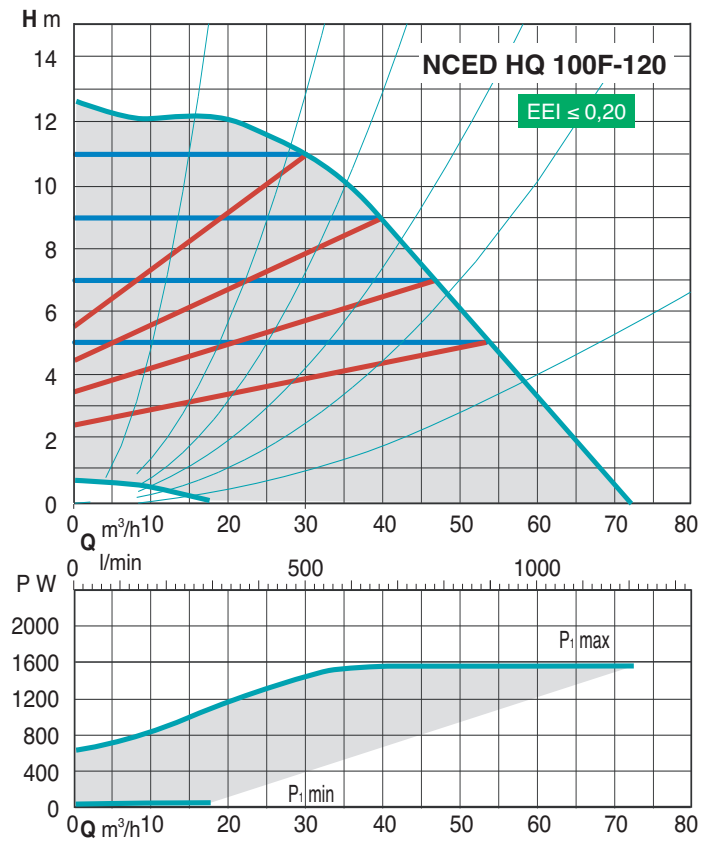

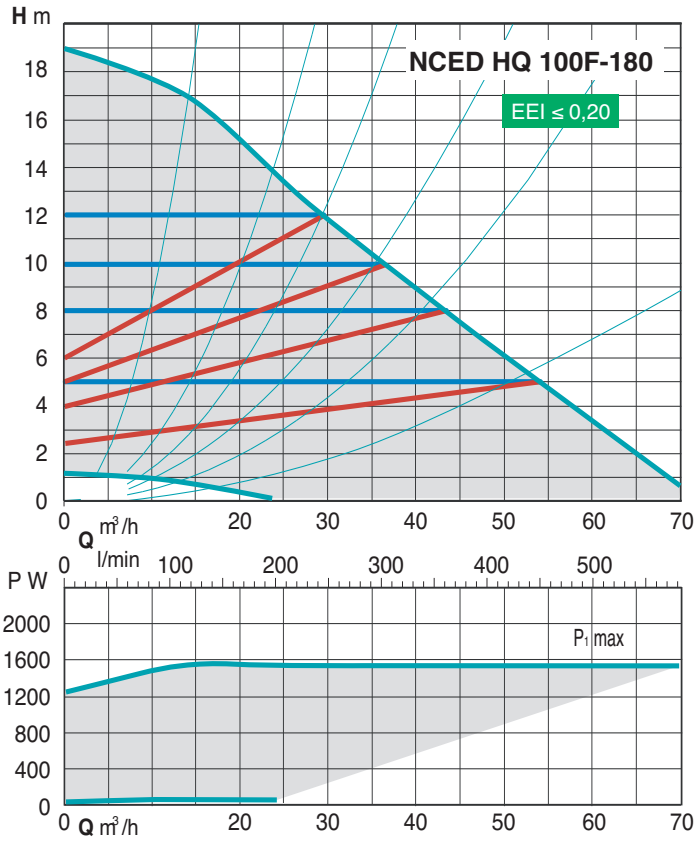

CALPEDA ROMANIA - INFINITY PUMPS SRL
Tel: 0268.33.47.47 / 0722.244.944
vanzari@calpeda.ro | www.calpeda.ro

NCED HQ.F

Energy saving twin circulating pumps with flanges

Dimensions and weights

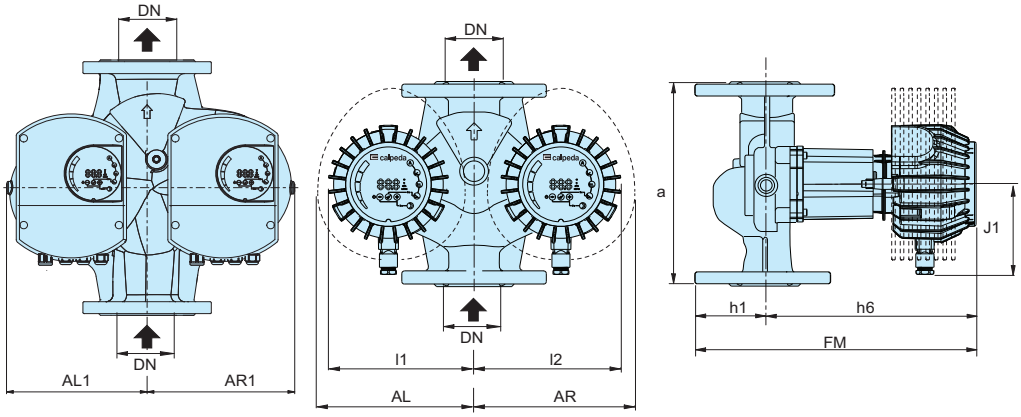

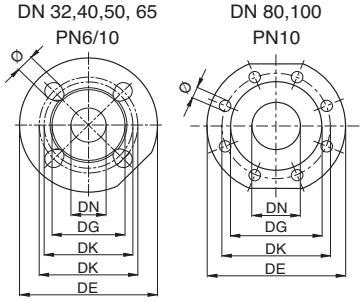

DN	DE	DK	DG	holes N.	holes Ø
32	140	90/100	74	4	14/19
40	150	100/110	80	4	14/19
50	165	110/125	90	4	14/19
65	185	130/145	110	4	14/19
80	200	160	148	8	19
100	220	180	166	8	19

TYPE	DN	H m	Q m^3/h	1~ 230 V A max	P_1 W max	a	J1	FM	h1	h6	I1	I2	AL	AR	AL1	AR1	kg
						mm											
NCED HQ 32F-120/220	32	12	19	1.8	370	220	115	330	65	265	-	-	185	186	-	-	-
NCED HQ 40F-40/250	40	4	13	1	110	250	99	270	65	205	181	186	-	-	-	-	14,3
NCED HQ 40F-80/250	40	8	19	1.3	270	250	115	330	65	265	-	-	185	186	-	-	16,7
NCED HQ 40F-120/250	40	12	24	2.3	480	250	115	330	65	265	-	-	185	186	-	-	16,9
NCED HQ 40F-180/250	40	18	25	3.4	680	250	115	390	65	325	-	-	200	200	-	-	25
NCED HQ 50F-40/280	50	4	23	1.3	160	280	99	313	72	241	199	200	-	-	-	-	19,6
NCED HQ 50F-80/280	50	8	32	1.7	370	280	115	373	72	301	199	200	-	-	-	-	22,4
NCED HQ 50F-120/280	50	12	36	2.5	560	280	115	373	72	301	199	200	-	-	-	-	23,6
NCED HQ 50F-180/280	50	18	42	3.6	830	280	115	373	72	311	-	203	200	-	-	-	28,8
NCED HQ 65F-40/340	65	4	31	1.1	230	340	115	384	75	309	216	226	-	-	-	-	32,2
NCED HQ 65F-80/340	65	8	43	2.6	560	340	115	384	75	309	216	226	-	-	-	-	32,7
NCED HQ 65F-120/340	65	12	50	3.5	810	340	115	395	75	320	216	226	-	-	-	-	38,4
NCED HQ 65F-180/340	65	18	57	6,6	1550	340	137	432	75	357	-	-	-	-	216	226	-
NCED HQ 80F-40/360	80	4	40	1.8	390	360	115	414	93	321	241	253	-	-	-	-	-
NCED HQ 80F-80/360	80	8	53	3.5	800	360	115	425	93	332	241	253	-	-	-	-	-
NCED HQ 80F-120/360	80	12	69	6,0	1400	360	137	462	93	369	-	-	-	-	241	253	-
NCED HQ 80F-180/360	80	18	72	6,6	1550	360	137	462	93	369	-	-	-	-	241	253	-
NCED HQ 100F-40/450	100	4	40	2.4	550	450	115	424	103	321	241	253	-	-	-	-	-
NCED HQ 100F-80/450	100	8	59	4,7	1150	450	137	472	103	369	-	-	-	-	241	253	-
NCED HQ 100F-120/450	100	12	72	6,6	1550	450	137	472	103	369	-	-	-	-	241	253	-
NCED HQ 100F-180/450	100	18	72	6,6	1550	450	137	472	103	369	-	-	-	-	241	253	-

Examples of installations

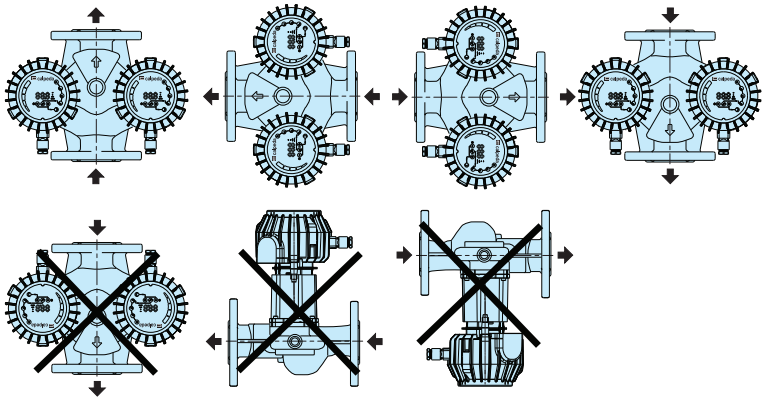

CALPEDA ROMANIA - INFINITY PUMPS SRL
Tel: 0268.33.47.47 / 0722.244.944
vanzari@calpeda.ro | www.calpeda.ro

NCE EL

Energy saving circulating pumps for solar systems

ErP READY 2015 — APPLIES TO EUROPEAN DIRECTIVE FOR ENERGY RELATED PRODUCTS

Construction
Energy saving variable speed circulating pump driven by a permanent magnet synchronous motor (pm) controlled by on board inverter.

Applications
Solar thermal systems.

Operating conditions
- Liquid temperature from +2 °C to +110 °C
- Ambient temperature from 0 °C to +40 °C
- Maximum permissible working pressure: 10 bar
- Storage: -20°C/+70°C max. relative humidity 95% at 40 °C
- Certifications: in conformity with CE requirements
- Sound pressure ≤ 43 dB (A).
- Minimum suction pressure: 0,3 bar at 50 °C
  1,0 bar at 95 °C
  1,5 bar at 110 °C
- Maximum glycol quantity: 40%
- EMC according to: EN 55014-1, EN 61000-3-2, EN 55014-2
- Connections: threaded ports ISO 228: G 1, G 1 1/2.
- The benchmark for most efficient circulators is EEI ≤ 0,20.
- Minimun power: 3 W.

Motor
Synchronous motor with permanent magnet.
- Motor: variable speed
- Standard voltage: single-phase 230 V (-10%;+6%)
- Frequency: 50-60 Hz
- Protection: IP 44
- Insulation class: H
- Class II appliance
- Overload protection (jammed rotor):
  1) automatic protection with electronic rotor release
  2) Overload thermal protector
- Cable: phases and neutral
- Constructed in accordance with: EN 60335-1, EN 60335-2-51.

Special features on request
Brass or cast iron unions.

Designation

NCE EL 25 - 60 / 180

- Series
- Version
- DN ports in mm
- Max. head in dm
- connection size mm

Features

Compact design
The space saving **NCE EL** is a very compact circulating pump, allows inr easy installation in small domestic heating systems.

Easy to install and to adjust
Installing the **NCE EL** is considerably simplified by the quick setting and power installation plug.

Reliable
Like all our electronic circulating pumps, the **NCE EL** features the patented self-cleaning square chamber design, which eliminates any possibility of rotor blockage.
Ceramic shaft.
Hydraulics components are completely painted with cataphoresis.
Program for automatic routine vent and release.

Easy use
Operating range with fixed curves from 0,6 m to 7 m; possibility to choose proportional pressure curve or selection of the optimum working point.

CALPEDA ROMANIA - INFINITY PUMPS SRL
Tel: 0268.33.47.47 / 0722.244.944
vanzari@calpeda.ro | www.calpeda.ro

NCE EL

Energy saving circulating pumps for solar systems

Operating modes

PROPORTIONAL CURVE PROGRAMMING Δp-v
(GREEN LED)
Moving the switch to the 'P' setting will allow the pump to operate against a proportional performance curve. This feature ensures maximum energy efficiency.

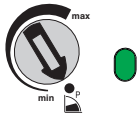

MANUAL PROGRAMMING
(BLUE LED)
Setting the switch in any position between the MIN and MAX points, the most suitable operating curve for the installation is manually selected.

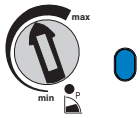

WARNING!
- The red LED indicates that the pump is not rotating but is still under tension.
- White flashing LED : plant degassing requirement, air in the system.

Characteristic curves

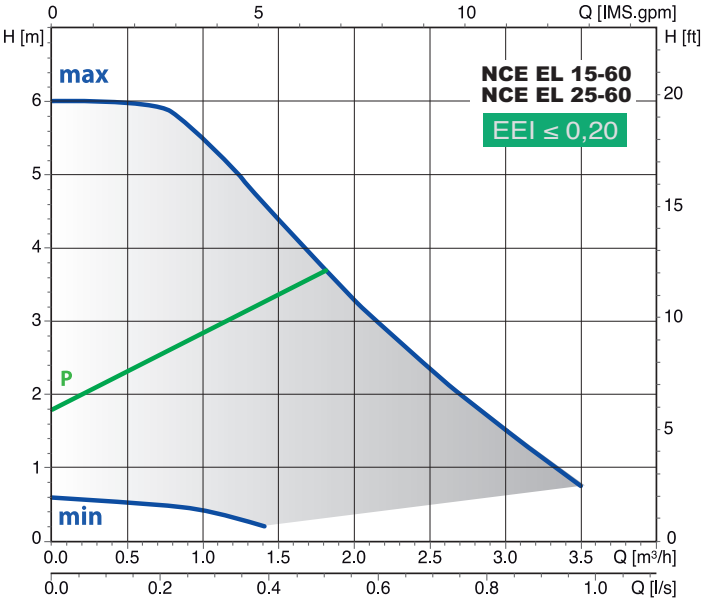

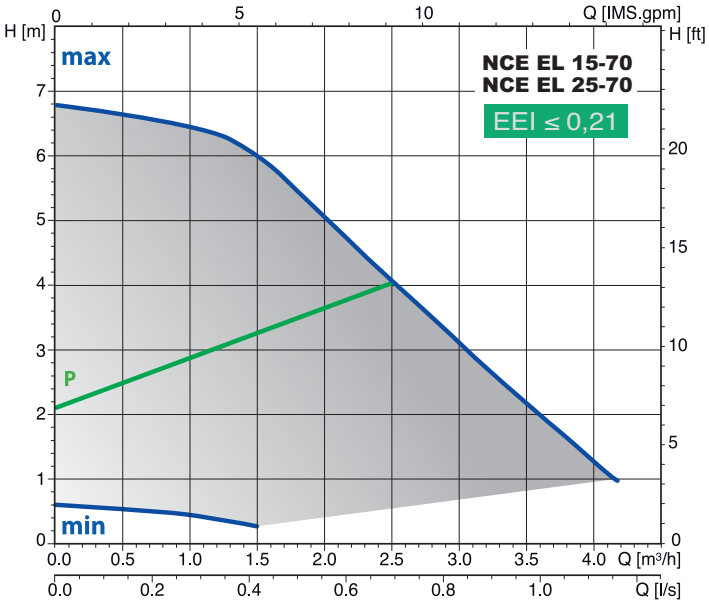

P proportional curve
min-max n fixed curves

CALPEDA ROMANIA - INFINITY PUMPS SRL
Tel: 0268.33.47.47 / 0722.244.944
vanzari@calpeda.ro | www.calpeda.ro

NCE EL

Energy saving circulating pumps for solar systems

Materials

Component	Pos.	Material
Pump casing	1	Cast iron GJL 200 EN 1561
Impeller	2	Composite
Shaft	3	Ceramic
Bearings	4	Carbon
Thrust bearing	5	Ceramic
Rotor	6	Composite / Ferrite
Winding	7	Copper wire
Electronic card	8	-
Gasket	9	EPDM

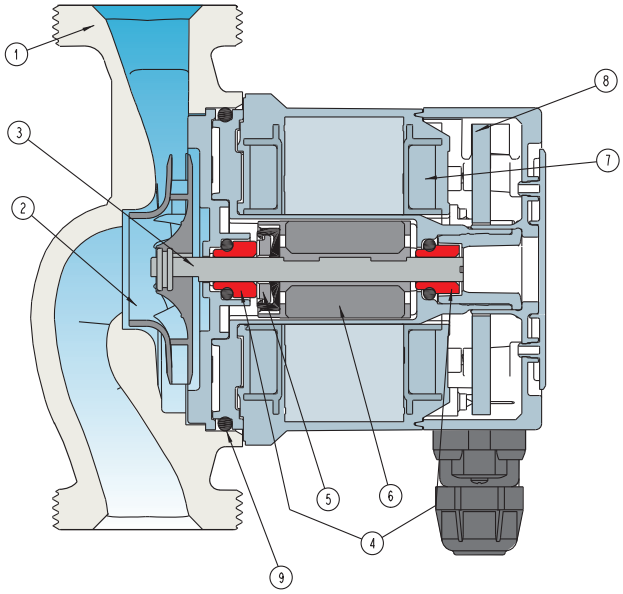

Dimensions and weights

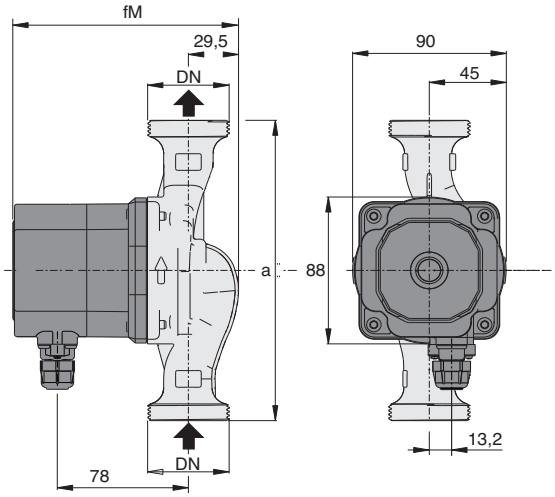

TYPE	DN	230V A max	230V A min	P1 W max	P1 W min	mm fm	mm a	kg
NCE EL 15-60/130/A	G 1	0,33	0,03	42	3	134	130	1,67
NCE EL 25-60/130/A	G 1 1/2							1,81
NCE EL 25-60/180/A	G 1 1/2	0,33	0,03	42	3	134	180	1,96
NCE EL 15-70/130	G 1	0,44	0,03	56	3	144	130	1,91
NCE EL 25-70/130	G 1 1/2							2,05
NCE EL 25-70/180	G 1 1/2	0,44	0,03	56	3	144	180	2,20

Unions (on request)

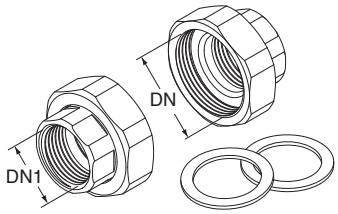

	DN	DN1
KIT G 1 - G 1/2 (NCE . 15..)	G 1	G 1/2
KIT G 1 1/2 - G 1 (NCE . 25..)	G 1 1/2	G 1
KIT G 2 - G 1 1/4 (NCE . 32..)	G 2	G 1 1/4

CALPEDA ROMANIA - INFINITY PUMPS SRL
Tel: 0268.33.47.47 / 0722.244.944
vanzari@calpeda.ro | www.calpeda.ro

Examples of installations

Installation

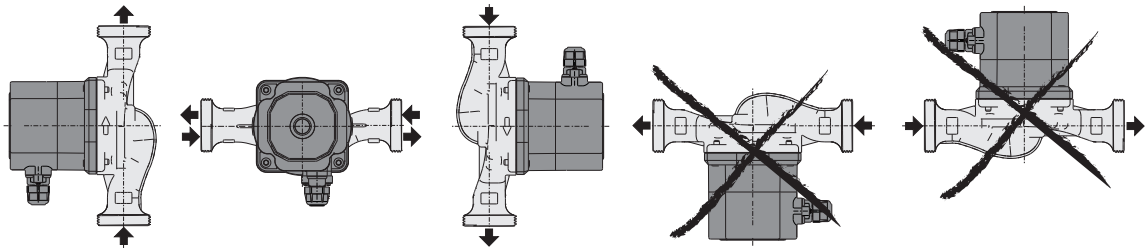

Terminal box arrangement (on request)

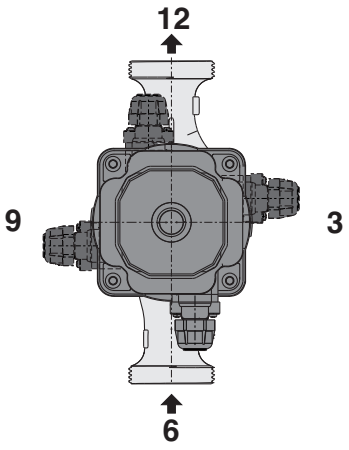

CALPEDA ROMANIA - INFINITY PUMPS SRL
Tel: 0268.33.47.47 / 0722.244.944
vanzari@calpeda.ro | www.calpeda.ro

NCE ES

Energy saving circulating pumps for sanitary hot water

ErP READY 2015 — APPLIES TO EUROPEAN DIRECTIVE FOR ENERGY RELATED PRODUCTS

Construction
Energy saving variable speed circulating pump driven by a permanent magnet synchronous motor (pm) controlled by on board inverter. Bronze pump casing.

Applications
Hot sanitary water systems.

Operating conditions
- Liquid temperature from +2 °C to +95 °C
- Ambient temperature from +2 °C to +40 °C
- Maximum working pressure: 10 bar
- Storage: -20°C/+70°C UR 95% a 40 °C
- Certifications: in conformity with CE requirements
- Sound pressure ≤ 43 dB (A).
- Minimum suction pressure: 0,3 bar at 50 °C
  1,0 bar at 95 °C
- EMC according to: EN 55014-1, EN 55014-2, EN 61000-3-2, EN 61000-3-3.
- Threated ports ISO 228: G 1, G 1 1/4, G 1 1/2.

Designation

NCE ES 25 - 40 / 130

- Series
- Version
- DN ports in mm
- Max. head in dm
- connection size mm

Motor
Synchronous motor with permanent magnets.
- Motor: variable speed
- Standard voltage: single-phase 230 V (-10%;+6%)
- Frequency: 50-60 Hz
- Protection: IP 44
- Insulation class: H
- Class II appliance
- Overload protection (jammed rotor):
  1) automatic protection with electronic rotor release
  2) overload thermal protector
- Cable: phases and neutral
- Constructed in accordance with: EN 60335-1, EN 60335-2-51.

Special features on request
Brass unions.

Features

Energy saving
NCE ES is an high energy efficiency product.

Compact design
The space saving **NCE ES** facilitate the installation in the smaller systems.

Easy to install and to adjust
Installing the **NCES** is considerably simplified by the quick setting and power installation plug. The adjustment is simple and intuitive thanks to the ability to be able to select the optimum working point or mode via a simple LED indicator and switch.

Reliability
NCES features the patented self-cleaning square chamber design, which eliminates any possibility of rotor blockage.

Easy use
Operating range with fixed curves from 0,6 m to 4 m with selection of the optimum working point.

Patented

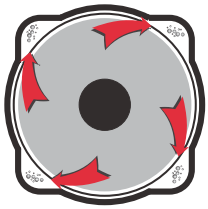

Escape routes for impurities inside the rotor chamber

CALPEDA ROMANIA - INFINITY PUMPS SRL
Tel: 0268.33.47.47 / 0722.244.944
vanzari@calpeda.ro | www.calpeda.ro

NCE ES

Energy saving circulating pumps for sanitary hot water

Operating modes

MANUAL PROGRAMMING
(BLUE LED)
Setting the switch in any position between the MIN and MAX points, the most suitable operating curve for the installation is manually selected.

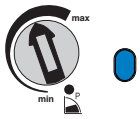

WARNING!
- The red LED indicates that the pump is not rotating but is still under tension.
- White flashing LED : plant degassing requirement, air in the system.

Characteristic curves

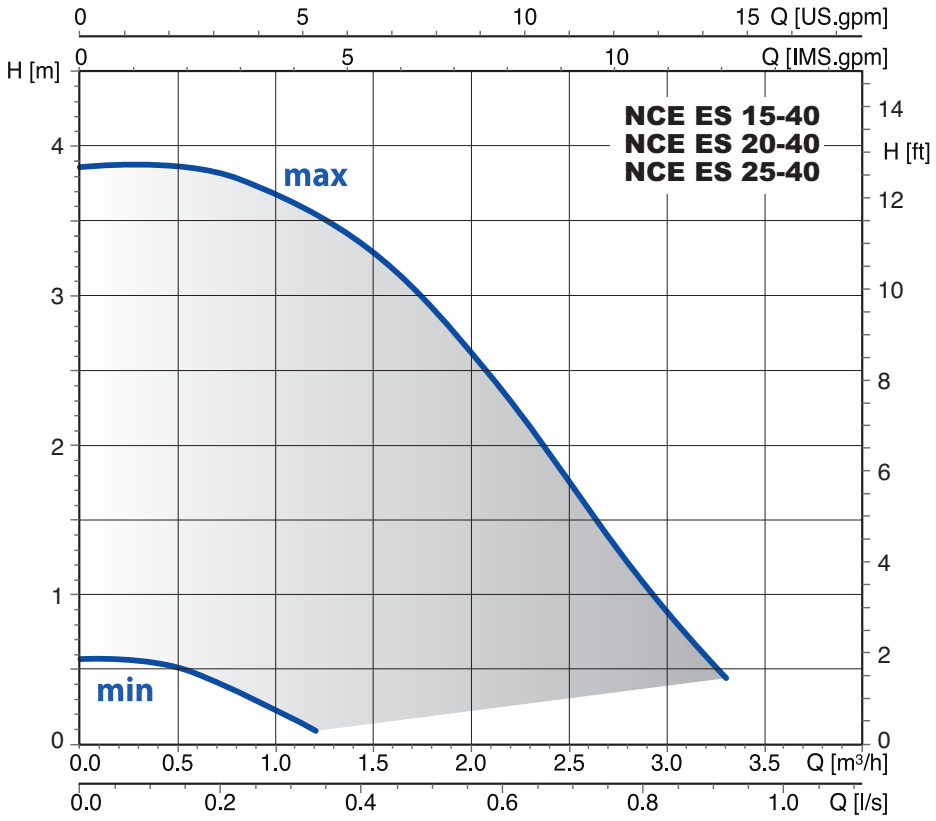

CALPEDA ROMANIA - INFINITY PUMPS SRL
Tel: 0268.33.47.47 / 0722.244.944
vanzari@calpeda.ro | www.calpeda.ro

NCE ES

Energy saving circulating pumps for sanitary hot water

Materials

Component	Pos.	Material
Pump casing	1	Bronze
Impeller	2	Composite
Shaft	3	Ceramic
Bearings	4	Carbon
Thrust bearing	5	Ceramic
Rotor	6	Composite / Ferrite
Winding	7	Copper wire
Electronic card	8	-
Gasket	9	EPDM

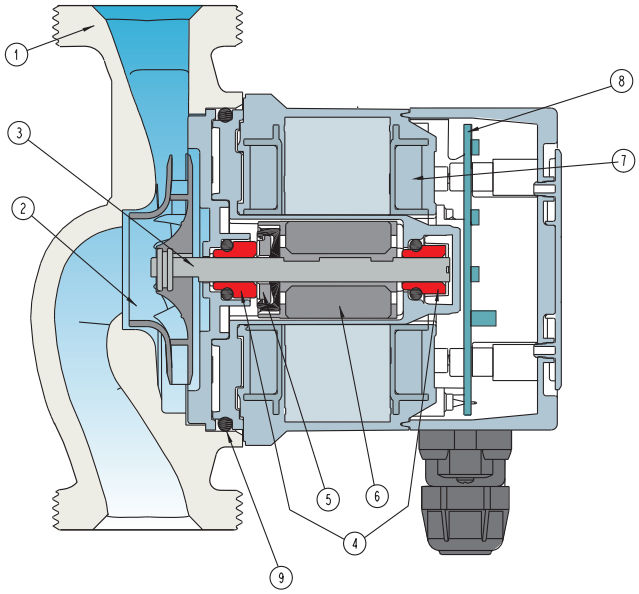

Dimensions and weights

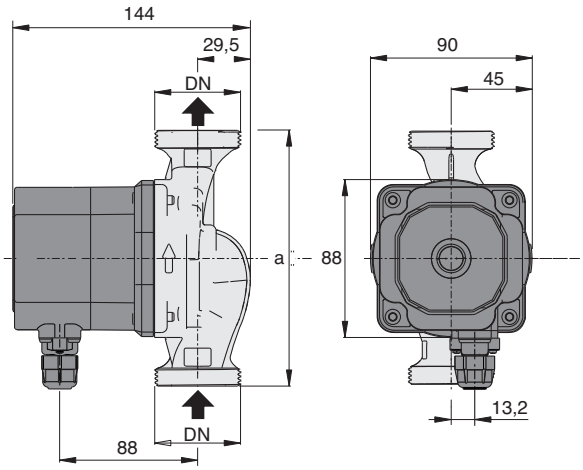

TYPE	DN	230V A max	230V A min	P1 W max	P1 W min	mm a	Net weight kg
NCE ES 15-40/130	G 1	0,35	0,03	44	4,5	130	2,15
NCE ES 20-40/130	G 1 1/4	0,35	0,03	44	4,5	130	2,25
NCE ES 25-40/130	G 1 1/2	0,35	0,03	44	4,5	130	2,35

Unions (on request)

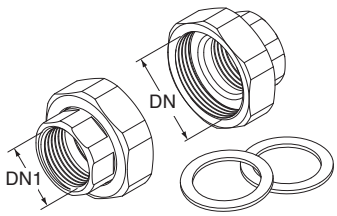

TYPE		DN	DN1
KIT G 1 - G 1/2	(NCE ES 15..)	G 1	G 1/2
KIT G 1 1/4 - G 3/4	(NCE ES 20..)	G 1 1/4	G 3/4
KIT G 1 1/2 - G 1	(NCE ES 25..)	G 1 1/2	G 1

CALPEDA ROMANIA - INFINITY PUMPS SRL
Tel: 0268.33.47.47 / 0722.244.944
vanzari@calpeda.ro | www.calpeda.ro

Examples of installations

Installation

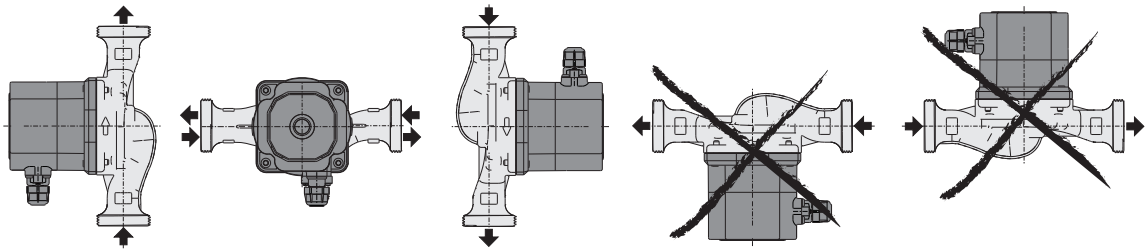

Terminal box arrangement (on request)

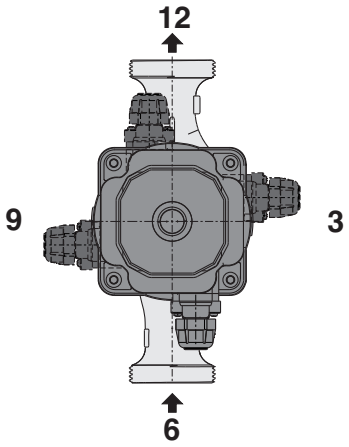

CALPEDA ROMANIA - INFINITY PUMPS SRL
Tel: 0268.33.47.47 / 0722.244.944
vanzari@calpeda.ro | www.calpeda.ro

NCE PS

Energy saving circulating pumps for sanitary hot water

Construction
Energy saving variable speed circulating pump driven by a permanent magnet synchronous motor (pm) controlled by on board inverter. Bronze pump casing.

Applications
Sanitary hot water systems.

Operating conditions
- Liquid temperature from +5 °C to +65 °C
- Ambient temperature from 0 °C to +40 °C
- Maximum permissible working pressure: 10 bar
- Storage: -20°C/+70°C max. relative humidity 95% at 40 °C
- Certifications: in conformity with CE requirements
- Sound pressure ≤ 38 dB (A).
- Minimum suction pressure: - 0,05 bar at 75 °C
  - 0,28 bar a 90 °C.
- Maximum glycol quantity: 20%.
- EMC according to: EN 55014-1, EN 55014-2
  EN 61000-3-2, EN 61000-3-2.
- Connections: threaded ports ISO 228: G 1 1/4, G 1 1/2.

Designation

NCE PS 25 - 60 / 180

- Series
- Version for sanitary hot water
- DN ports in mm
- Max. head in dm
- connection size mm

Motor
Synchronous motor with permanent magnet.
- Motor: variable speed
- Standard voltage: single-phase 230 V (-10%;+6%)
- Frequency: 50-60 Hz
- Protection: IP 44
- Insulation class: F
- Overload protection (integrated).
- Cable: phases and neutral.
- Constructed in accordance with: EN 60335-1, EN 60335-2-51.

Special features on request
The NCE PSR version is equipped with an additional module that allows to control the pump with an analog signal 0-10V.
Brass unions.

Features

Easy adjustment
The adjustment is simple and intuitive thanks to the LED indicator.

Easy use
3 proportional curves and 3 fixed speed curves are available and selectable by the button.

CALPEDA ROMANIA - INFINITY PUMPS SRL
Tel: 0268.33.47.47 / 0722.244.944
vanzari@calpeda.ro | www.calpeda.ro

NCE PS Energy saving circulating pumps for sanitary hot water

Operating modes

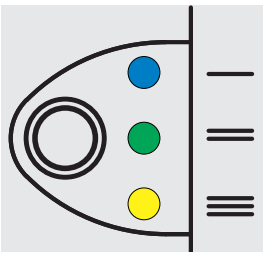

Operating functions - control buttons.
NCE PS circulator could work:
- with proportional pressure curves
- with fixed speed curves

PROPORTIONAL CURVE PROGRAMMING Δp-v

- (P1 BLUE LED blinking light)
- (P2 GREEN LED blinking light)
- (P3 YELLOW LED blinking light)

Push repeatedly the button to select the proportional curve.
The color changes depending on the selected curve.
This operating mode guarantees the maximum energy efficiency.

FIXED SPEED CURVE PROGRAMMING

- (I BLUE LED light)
- (II GREEN LED light)
- (III YELLOW LED light)

If you push the button for 5 seconds the pump adopt the fixed speed curve. The color changes depending on the selected curve. (to replace standard 3-speed circulators).

Coverage chart

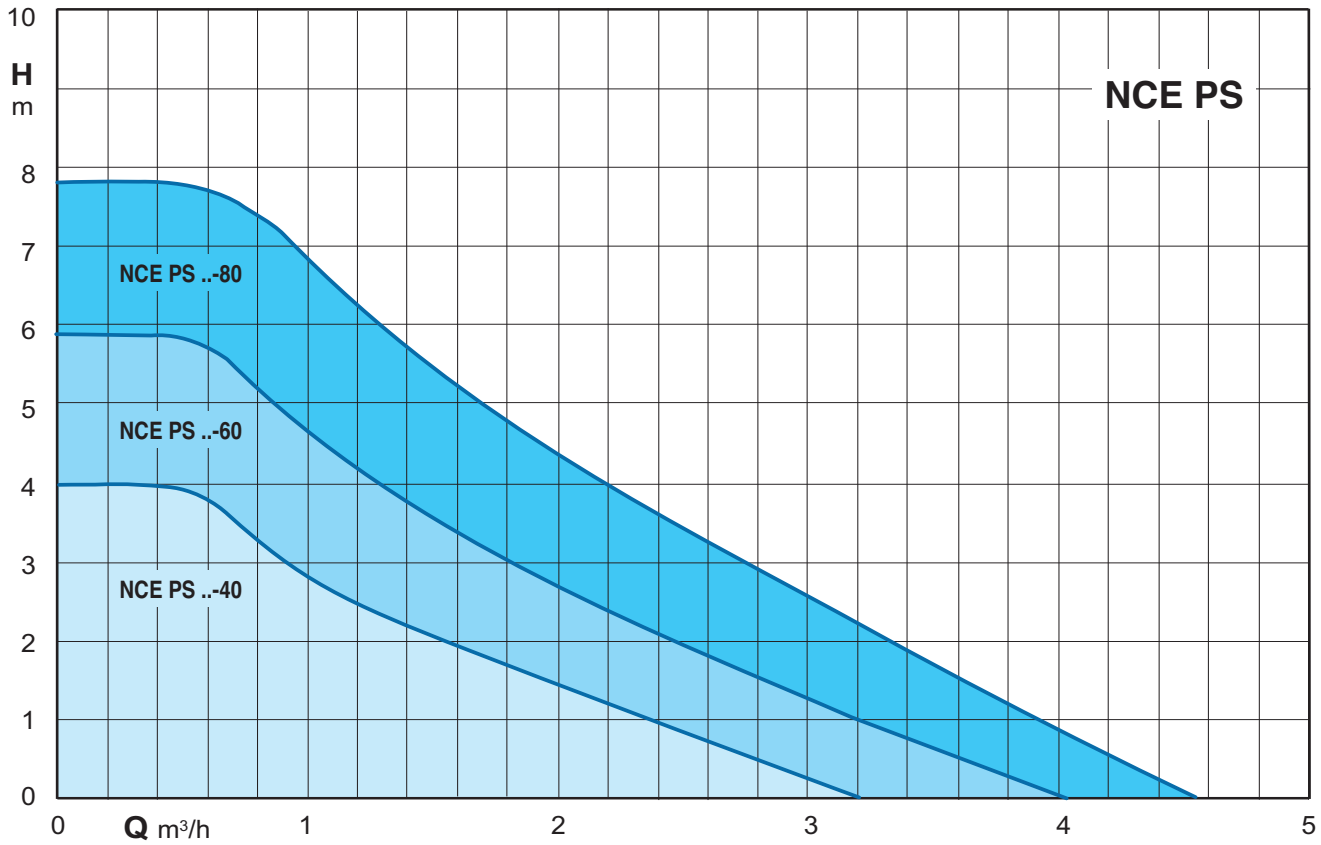

CALPEDA ROMANIA - INFINITY PUMPS SRL
Tel: 0268.33.47.47 / 0722.244.944
vanzari@calpeda.ro | www.calpeda.ro

NCE PS Energy saving circulating pumps for sanitary hot water

Characteristic curves

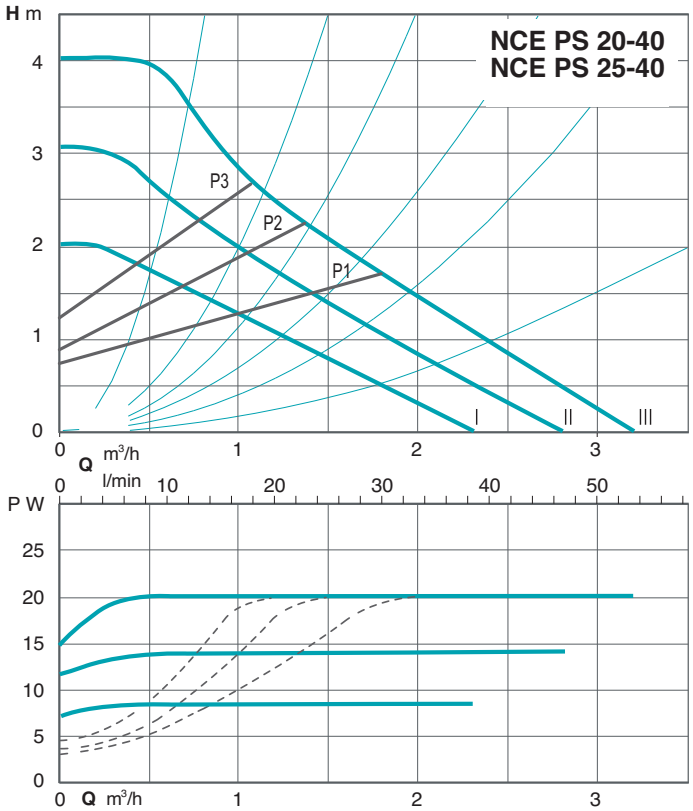

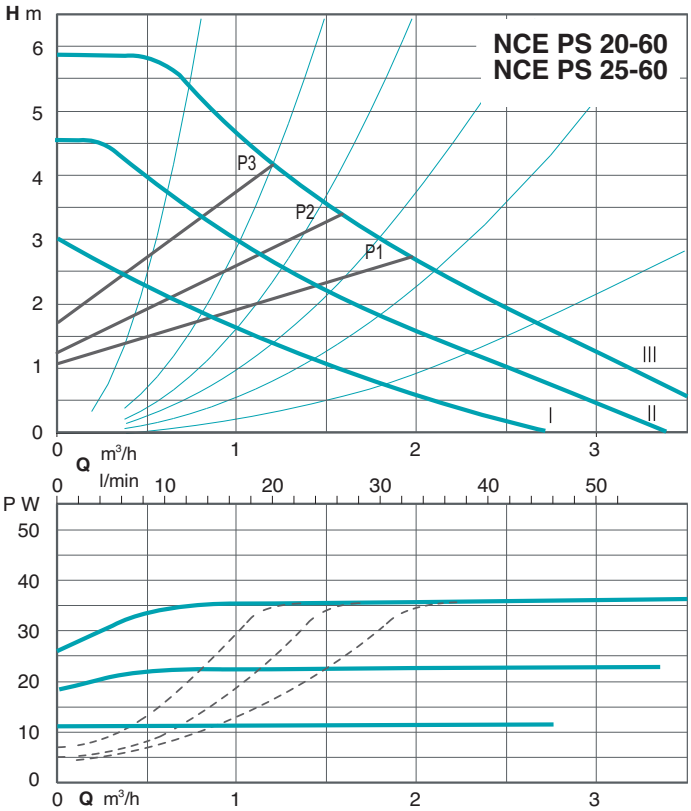

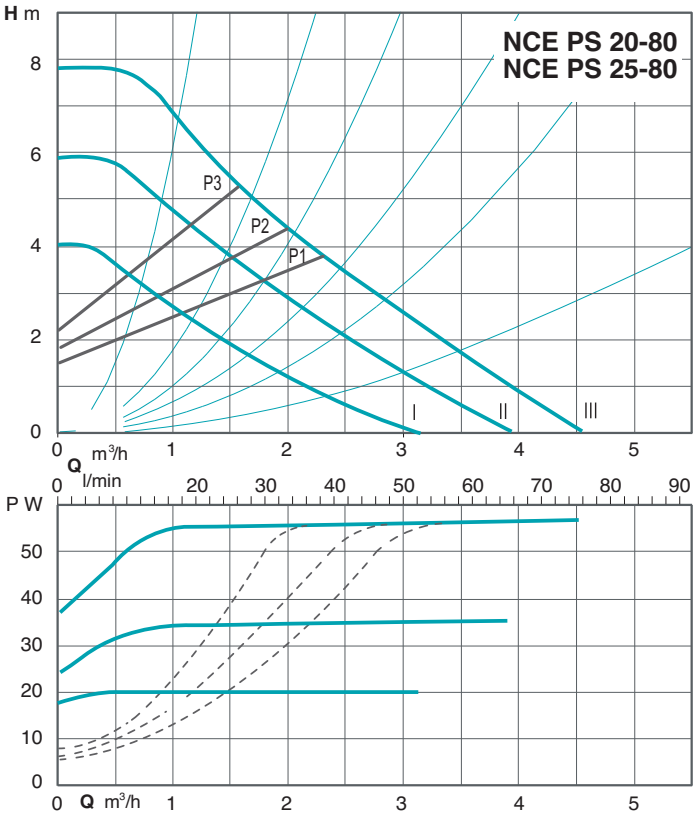

CALPEDA ROMANIA - INFINITY PUMPS SRL
Tel: 0268.33.47.47 / 0722.244.944
vanzari@calpeda.ro | www.calpeda.ro

NCE PS Energy saving circulating pumps for sanitary hot water

Materials

Component	Pos.	Material
Pump casing	1	Bronze
Impeller	2	Composite
Shaft	3	Stainless steel AISI 420
Bearings	4	Carbon
Thrust bearing	5	Ceramic
Rotor	6	Stainless steel jacket
Winding	7	Copper wire
Electronic card	8	-
Gasket	9	EPDM

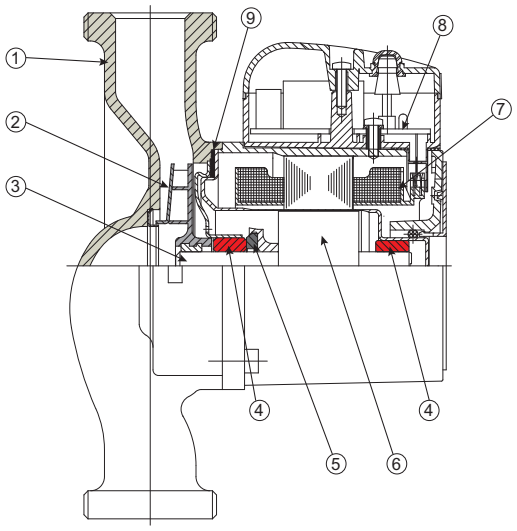

Examples of installations

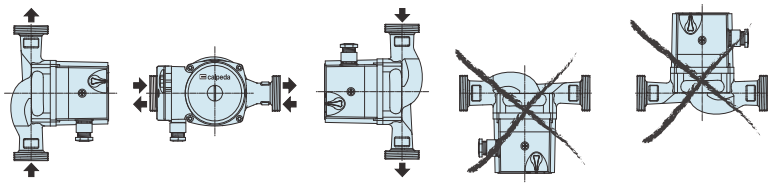

Dimensions and weights

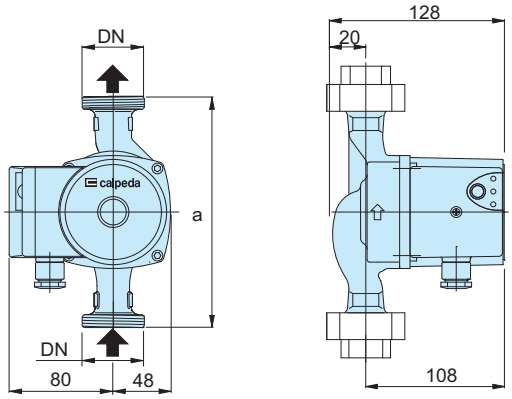

TYPE	DN	H m	Q m³/h	1~ 230 V A min	A max	P1 W max	a mm	kg
NCE PS 20-40/130 **NCE PS 25-40/130**	G 1 1/4 G 1 1/2	4	3	0,05	0,2	20	130	2,2 2,2
NCE PS 20-60/130 **NCE PS 25-60/130**	G 1 1/4 G 1 1/2	6	3,5	0,05	0,32	35	130	2,2 2,2
NCE PS 20-80/130 **NCE PS 25-80/130**	G 1 1/4 G 1 1/2	8	4	0,05	0,5	55	130	2,2 2,2

Unions (on request)

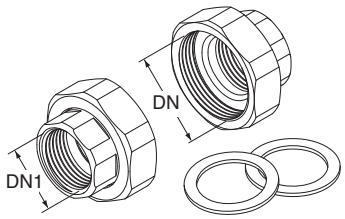

TYPE		DN	DN1
KIT G 1 - G 1/2	(NCE . 15..)	G 1	G 1/2
KIT G 1 1/4 - G 3/4	(NCE . 20..)	G 1 1/4	G 3/4
KIT G 1 1/2 - G 1	(NCE . 25..)	G 1 1/2	G 1
KIT G 2 - G 1 1/4	(NCE . 32..)	G 2	G 1 1/4

CALPEDA ROMANIA - INFINITY PUMPS SRL
Tel: 0268.33.47.47 / 0722.244.944
vanzari@calpeda.ro | www.calpeda.ro

NCS3

Circulating pumps for sanitary hot water

Construction

Bronze pump casing with suction and delivery connections with the same diameter and on the same axis (in-line).
Stainless steel AISI 316 can.

Materials	NCS3 ..-40, -50	NCS3 ...-70
Pump casing	Bronze	Bronze
Impeller	Composite	Composite
Shaft	Stainless steel AISI 420	Stainless steel AISI 420
Bearings	Graphite	Ceramic

Applications

Circulation of sanitary hot water.

Operating conditions

Liquid temperature from +5 °C to +65 °C.
Ambient temperature up to 40 °C.
Sound pressure ≤ 43 dB (A).
Minimum suction pressure: 0,05 bar at 50 °C
Maximum permissible working pressure 10 bar.

Designation

NCS3 20 - 40 / 130

- Series
- DN ports in mm
- Max. head in dm
- connection size mm

Motor

2-pole induction motor, 50 Hz.
Three adjustable speeds.
NCS3: single-phase 230 V.
Insulation class H.
Protection IP 44.

Special features on request

Brass unions.

Coverage chart

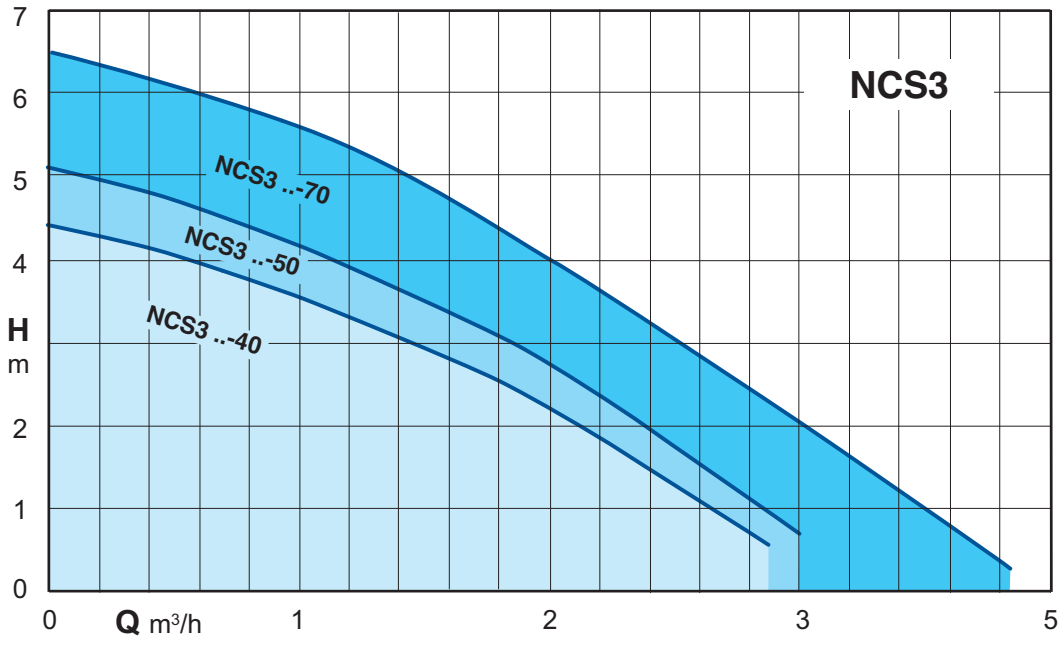

CALPEDA ROMANIA - INFINITY PUMPS SRL
Tel: 0268.33.47.47 / 0722.244.944
vanzari@calpeda.ro | www.calpeda.ro

NCS3 Circulating pumps for sanitary hot water

Characteristic curves

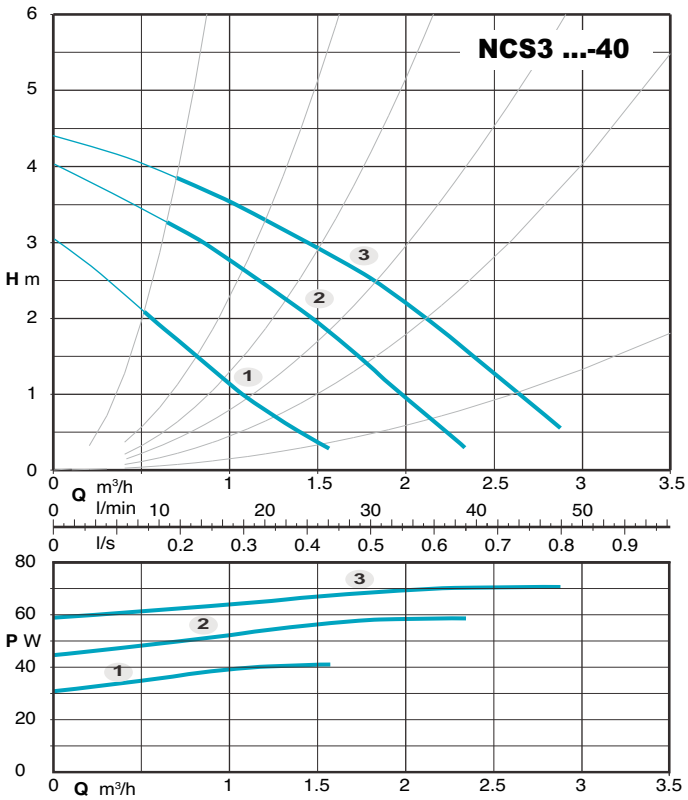

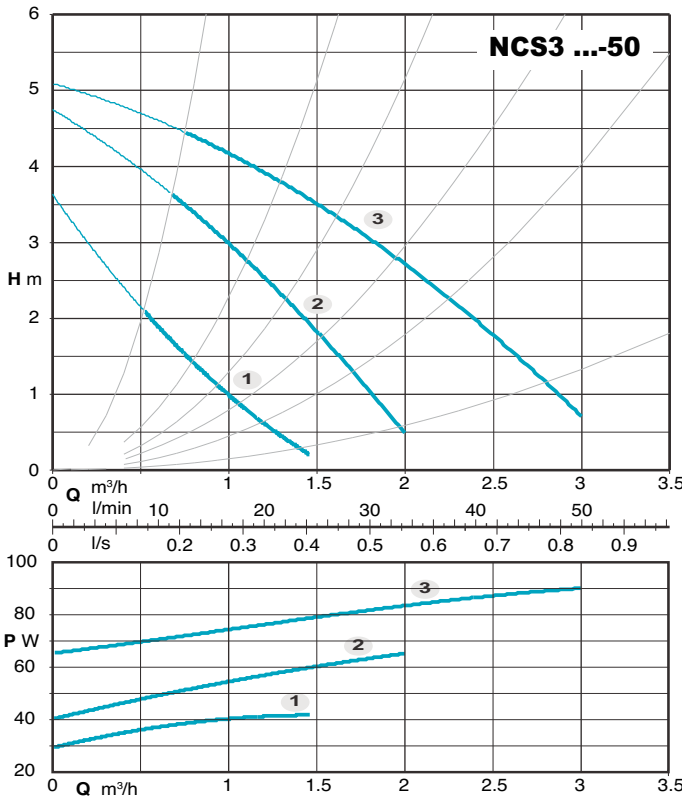

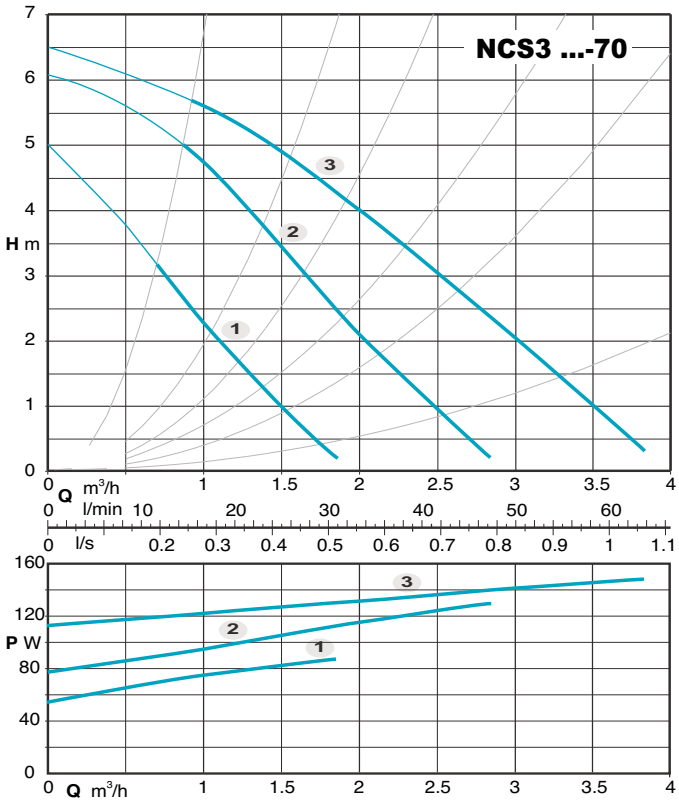

CALPEDA ROMANIA - INFINITY PUMPS SRL
Tel: 0268.33.47.47 / 0722.244.944
vanzari@calpeda.ro | www.calpeda.ro

NCS3 Circulating pumps for sanitary hot water

Examples of installations

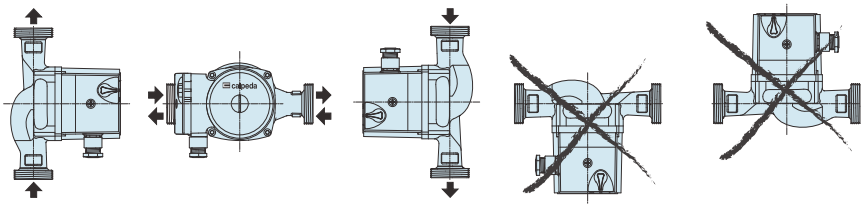

Dimensions and weights

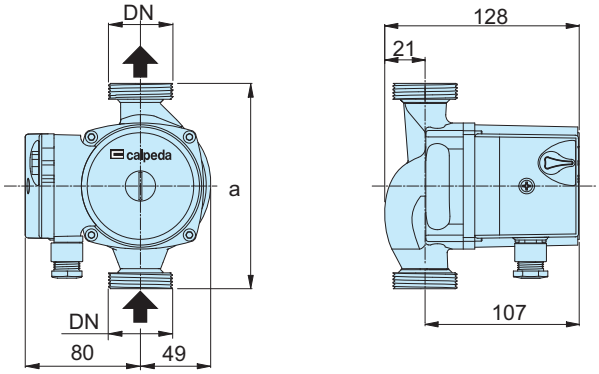

TYPE	DN	Pos.	P1 (W)	1x 230 V [A]	a mm	[kg]
NCS3 20-40/130	G 1 1/4	3	70	0,30	130	2,3
NCS3 25-40/130	G 1 1/2	2	59	0,26		
		1	41	0,18		
NCS3 20-50/130	G 1 1/4	3	91	0,38	130	2,5
NCS3 25-50/130	G 1 1/2	2	65	0,28		
		1	42	0,18		
NCS3 20-70/130	G 1 1/4	3	148	0,66	130	3,8
NCS3 25-70/130	G 1 1/2	2	128	0,59		
		1	87	0,41		

Unions (on request)

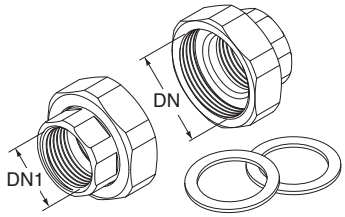

TYPE	DN	DN1
KIT G 1 1/4 - G 3/4 (NCS3 20..)	G 1 1/4	G 3/4
KIT G 1 1/2 - G 1 (NCS3 25..)	G 1 1/2	G 1

CALPEDA ROMANIA - INFINITY PUMPS SRL
Tel: 0268.33.47.47 / 0722.244.944
vanzari@calpeda.ro | www.calpeda.ro

NC3

Three speeds circulating pumps with threaded ports

CANNOT BE SOLD IN THE EU

Construction

Pump casing with suction and delivery connections with the same diameter and on the same axis (in-line).
Brass or cast iron unions on request.

Component	Materials
Pump casing	Cast iron
Impeller	Composite
Shaft	Stainless steel AISI 420

Applications

For clean liquids, without abrasives, which are non-aggressive for the pump materials.
Civil and industrial heaty sistems.

Operating conditions

Liquid temperature from +5 °C to +110 °C (from -10 °C to +110 °C for NC3 ..-70 and NC3 ..-80-85-120).
Ambient temperature up to 40 °C.
Sound pressure ≤ 43 dB (A).
Maximum glycol quantity: 50% (Mixture with more than 20% glycol content require recheking of the pumping data).
Maximum permissible working pressure 10 bar.

TYPE	Minimum suction pressure: bar		
	Temperature		
	50 °C	80 °C	110 °C
NC3 ..-40,50,60	0,05	0,4	1,1
NC3 ..-70	0,05	0,4	1,1
NC3 ..-80,85,120	0,05	0,4	1,2

Motor

2-pole induction motor, 50 Hz.
Three adjustable speeds.
NC3: single-phase 230 V.
Insulation class H.
Protection IP 44.

Installation

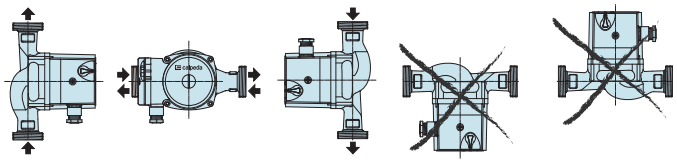

Unions

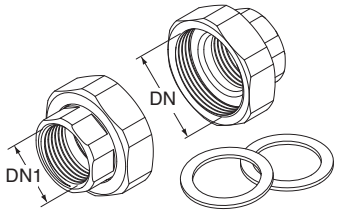

TYPE		DN	DN1
KIT G 1 - G 1/2	(NC3 15..)	G 1	G 1/2
KIT G 1 1/2 - G 1	(NC3 25..)	G 1 1/2	G 1
KIT G 2 - G 1 1/4	(NC3 32..)	G 2	G 1 1/4

Designation

NC3 32 - 70 / 180

- Series
- DN ports in mm
- Max. head in dm
- connection size mm

CALPEDA ROMANIA - INFINITY PUMPS SRL
Tel: 0268.33.47.47 / 0722.244.944
vanzari@calpeda.ro | www.calpeda.ro

NC3

Three speeds circulating pumps with threaded ports

Characteristic curves, dimensions and weights

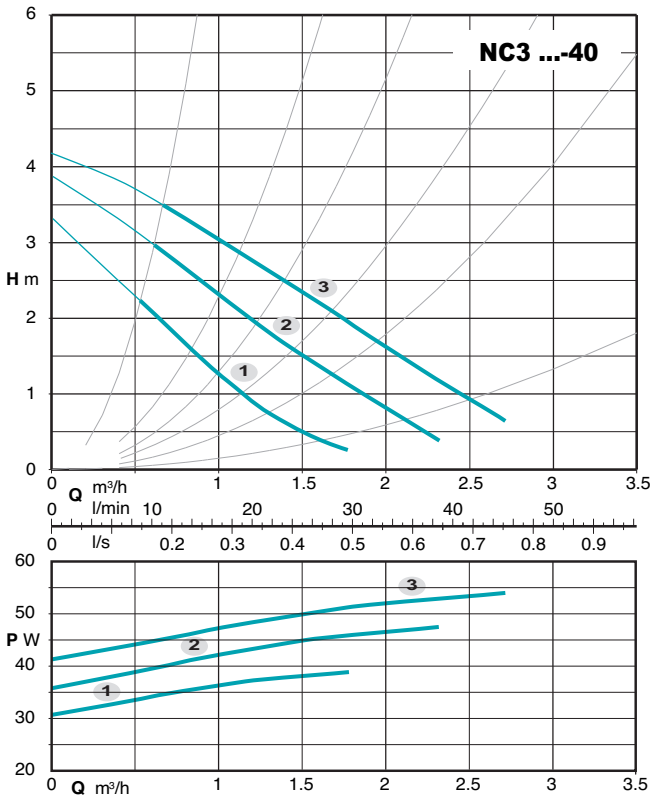

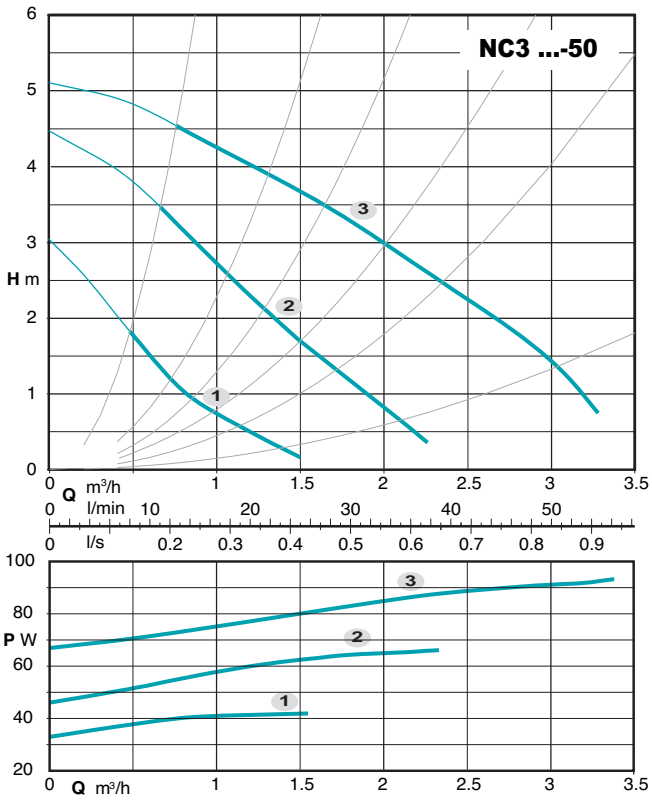

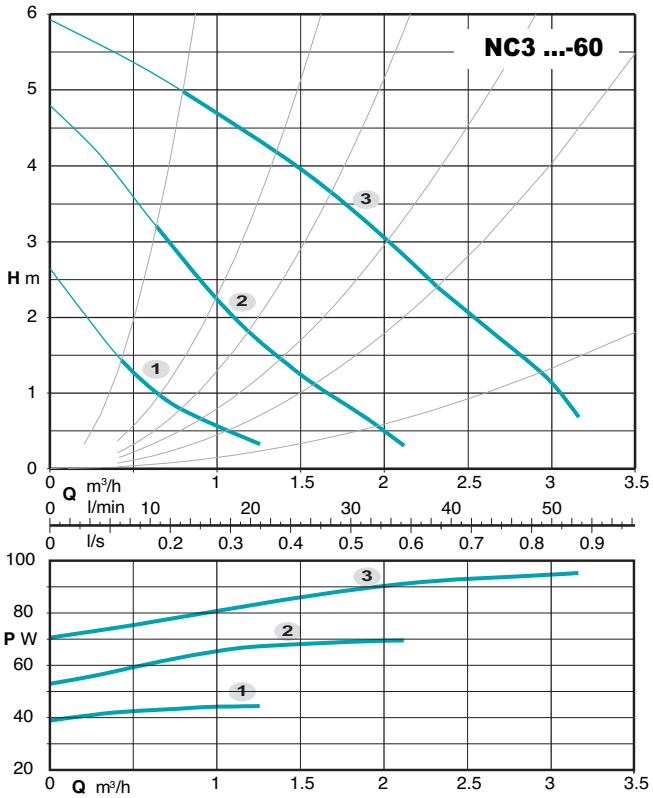

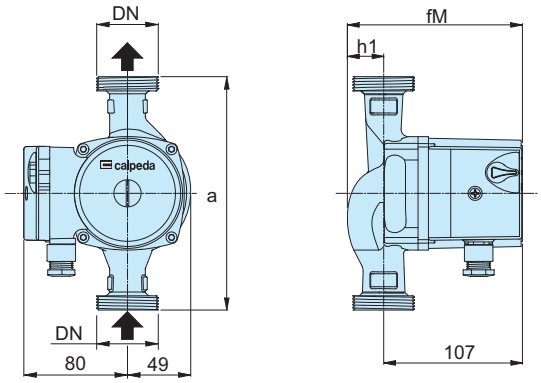

TYPE	DN	Pos.	P1 (W)	1x 230 V [A]	mm a	fM	h1	[kg]
NC3 15-40/130	G 1	3	53	0,23	130	128	21	2,2
NC3 25-40/130	G 1 1/2	2	47	0,21	130	135	28	2,4
NC3 25-40/180	G 1 1/2	1	38	0,17	180	135	28	2,6
NC3 15-50/130	G 1	3	91	0,38	130	128	21	2,2
NC3 25-50/130	G 1 1/2	2	65	0,28	130	135	28	2,4
NC3 25-50/180	G 1 1/2	1	42	0,18	180	135	28	2,6
NC3 32-50/180	G 2				180	138	31	3
NC3 15-60/130	G 1	3	95	0,41	130	128	21	2,2
NC3 25-60/130	G 1 1/2	2	70	0,30	130	135	28	2,4
NC3 25-60/180	G 1 1/2	1	44	0,20	180	135	28	2,6
NC3 32-60/180	G 2				180	138	31	3

CALPEDA ROMANIA - INFINITY PUMPS SRL
Tel: 0268.33.47.47 / 0722.244.944
vanzari@calpeda.ro | www.calpeda.ro

NC3

Three speeds circulating pumps with threaded ports

Characteristic curves, dimensions and weights

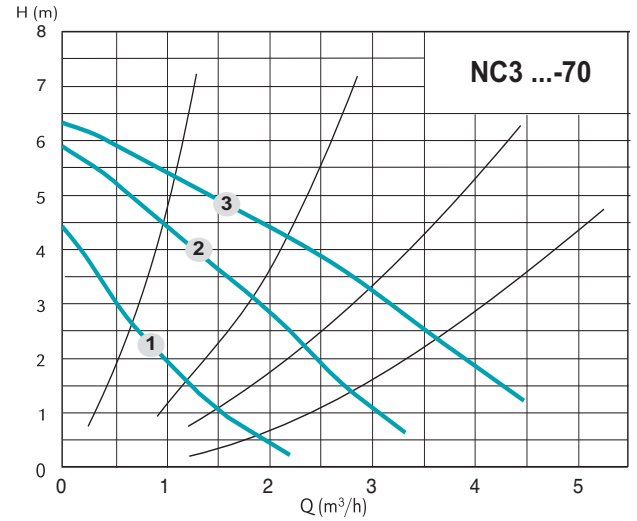

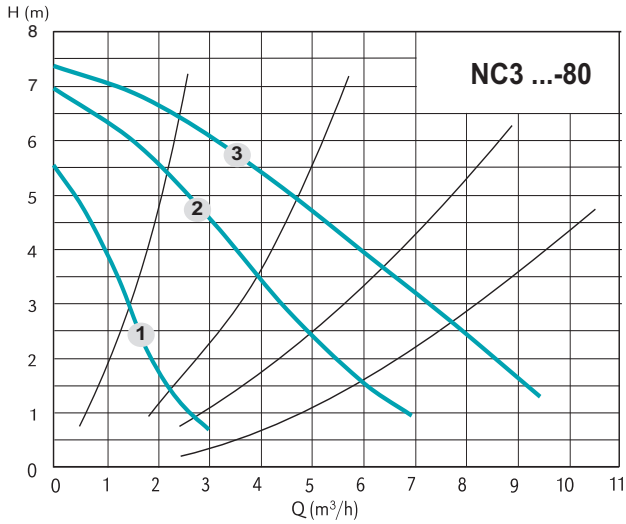

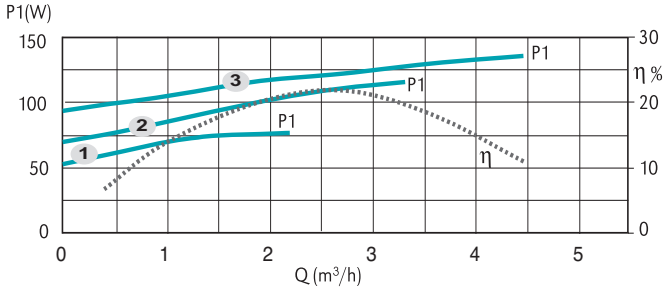

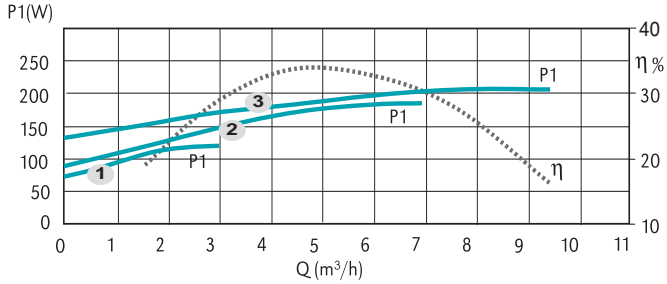

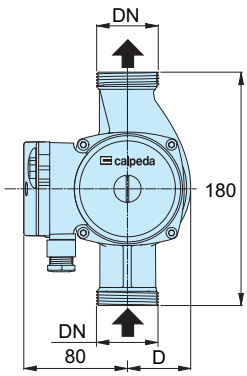

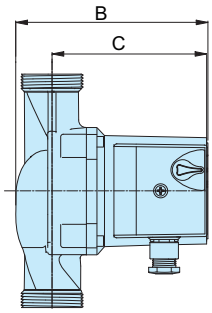

TYPE	DN	Pos.	P1 (W)	1x 230 V [A]	[mm] B	C	D	[kg]
NC3 25-70/180	G 1 1/2	3 2 1	136 116 77	0,61 0,54 0,37	135	107	49	2,9
NC3 32-70/180	G 2	3 2 1	136 116 77	0,61 0,54 0,37	138	107	49	3,1
NC3 32-80/180	G 2	3 2 1	206 185 120	0,91 0,88 0,60	185	143	58	4,7

CALPEDA ROMANIA - INFINITY PUMPS SRL
Tel: 0268.33.47.47 / 0722.244.944
vanzari@calpeda.ro | www.calpeda.ro

NC3

Three speeds circulating pumps with threaded ports

Characteristic curves, dimensions and weights

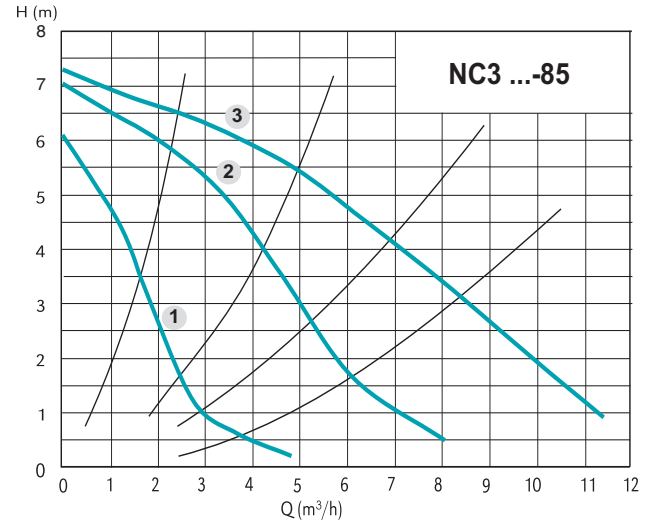

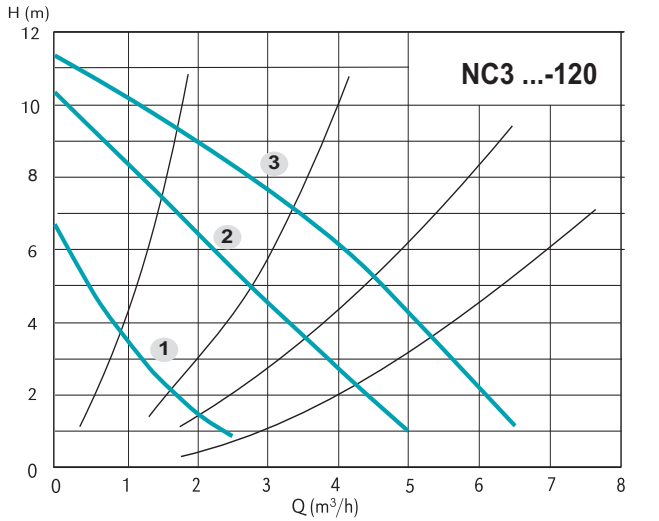

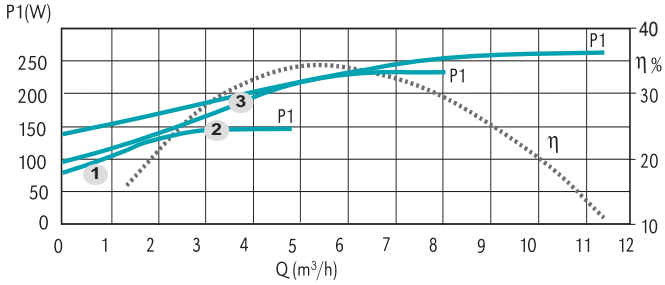

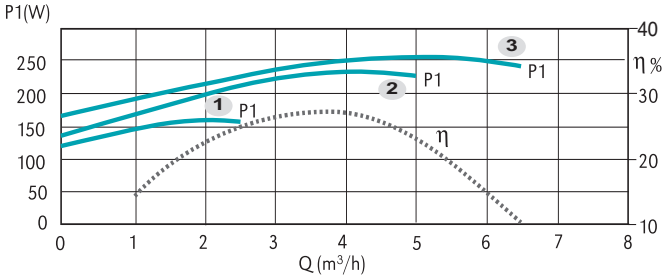

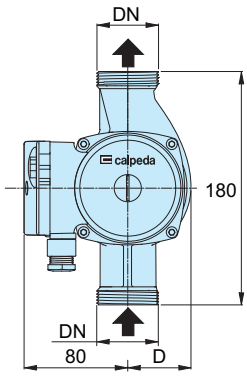

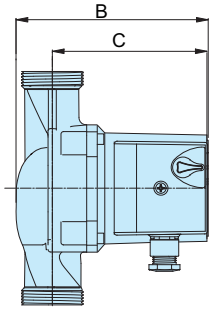

TYPE	DN	Pos.	P1 (W)	1x 230 V [A]	[mm] B	C	D	[kg]
NC3 32-85/180	G 2	3 2 1	277 250 172	1,2 1,16 0,85	185	143	58	4,9
NC3 32-120/180	G 2	3 2 1	265 251 176	1,15 1,14 0,85	208	174	68	5,2

CALPEDA ROMANIA - INFINITY PUMPS SRL
Tel: 0268.33.47.47 / 0722.244.944
vanzari@calpeda.ro | www.calpeda.ro

IDROMAT

Electronic regulator for pumps

Construction

Regulation device for pump control equipped with flow and pressure sensor connected to an electronic system.
Inlet and delivery connection ports of the same diameter.
Built-in check valve.
Pressure gauge 0-12 bar supplied as standard for IDROMAT 5.. (IDROMAT 6.. not present).
Automatic reset function for the reset of the system without manual operation.

Applications

Automatic control of pumps for water supply and increase of network pressure.
Control of starting/stopping of the pump when cocks are opened/closed.

For protection of the pump:
– against dry running;
– against the risk of operation without water at the inlet (caused by a lack of water inflow in the inlet pipe under positive suction head, by a non-immersed suction pipe, by excessive suctionlift or by air entering the suction pipe);
– against operation with closed connection ports.

Operating conditions

Mains voltage: single-phase 230 V ±10% Idromat 5e;
single-phase 115 - 240 V ±5% for Idromat 5, 6.
Frequency: 50 - 60 Hz.
Current values:
- 8A max during operation (16A max at start-up) for IDROMAT 5;
- 16A max during operation (30A max at start-up) for IDROMAT 6
Maximum pump motor power 1,5 kW (2,2 kW for IDROMAT 6).
Protection: IP 65.
Maximum working pressure: 12 bar (1,2 MPa)
Maximum Operating temperature up to 65 °C.
Minimum flow ~ 1 l/min.
Male connections 1” (1 1/4 for IDROMAT 6).

Operating conditions

TYPE	Switching-on pressure	Pump head
IDROMAT 5-12	1,2 bar	> 25 m
IDROMAT 5-15	1,5 bar	> 30 m
IDROMAT 5-22	2,2 bar	> 35 m
IDROMAT 5-30	3 bar	> 45 m
IDROMAT 6-15	1,5 bar	> 30 m
IDROMAT 6-30	3 bar	> 45 m
IDROMAT 5e	adjustable from 1,5 to 2,5 bar	(1)

(1) 1,5 bar more than the expected restart pressure

Materials

Component	Material
Housing	Polyamide PA 6 G.F. reinforced
Membrane	Natural rubber

Comparison of pressure values

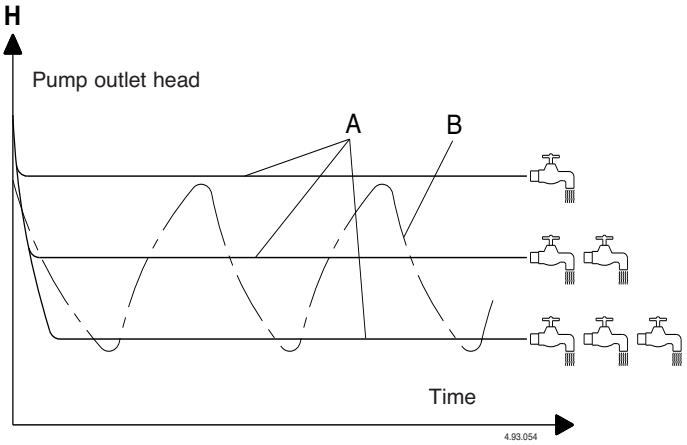

A = operation with **IDROMAT** = constant pressure;
B = operation with traditional vessel and pressure switch system.

Diagram of head loss

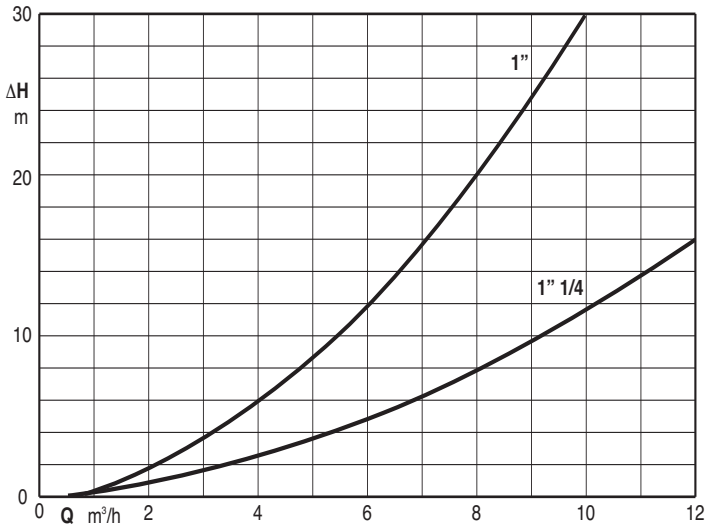

ΔH = Head loss in meters

CALPEDA ROMANIA - INFINITY PUMPS SRL
Tel: 0268.33.47.47 / 0722.244.944
vanzari@calpeda.ro | www.calpeda.ro

IDROMAT

Electronic regulator for pumps

Control Panel

Status indications and system reset
The three leds give the information about the system operativity, the first led indicates the presence of supply, the second led indicates if the pump is operating and the third led indicates if an alarm has occurred in the system. The Reset button allows to manually restart the system when an alarm occur.

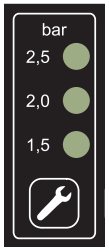

Programming of the re-start pressure
The display allows to visualize the re-start pressure of the system, the buttons allow to change the re-start pressure value.

Dimensions and weights

IDROMAT 5

kg 1,2

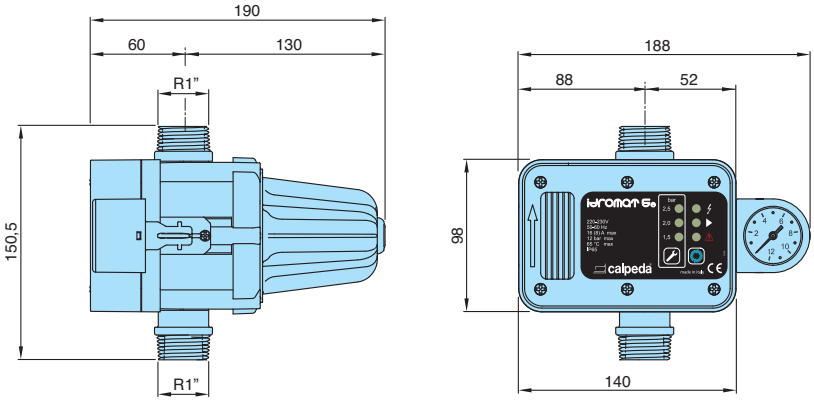

IDROMAT 6

kg 1,5

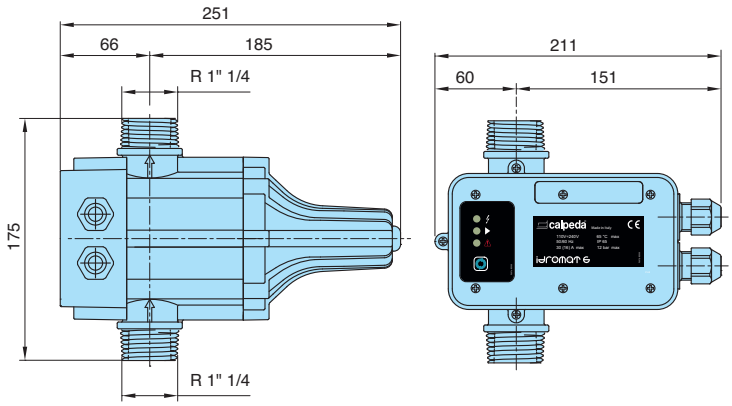

CALPEDA ROMANIA - INFINITY PUMPS SRL
Tel: 0268.33.47.47 / 0722.244.944
vanzari@calpeda.ro | www.calpeda.ro

IDROMAT

Electronic regulator for pumps

Installation example

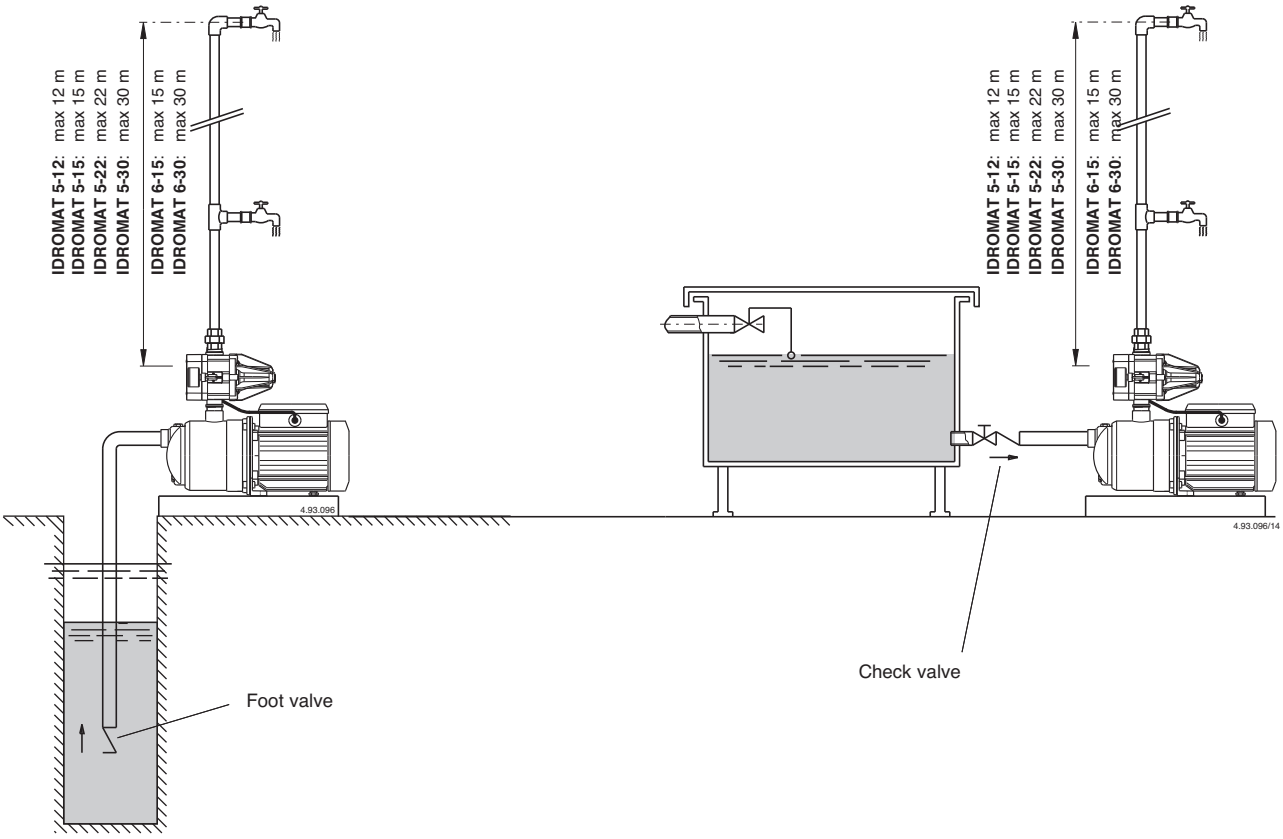

CALPEDA ROMANIA - INFINITY PUMPS SRL
Tel: 0268.33.47.47 / 0722.244.944
vanzari@calpeda.ro | www.calpeda.ro

IDROMAT

Electronic regulator for pumps

Features

Flexibility
The standard double supply voltage (only for Idromat 5 and 6) allows to connect power supply of 115 - 240V without modifications on the device.

Easy to use
With the Idromat 5e it is possible to change the re-start pressure, the operation is possible also with the pump that operate.

Safety
The device includes a automatic re-start system with anti-lock mode in order to reduce the user operations.

Reliability
The pressure gauge locking system (patented) allows an easy replacement in case of failure and an easy drainage of the device.

User friendly
The high luminosity leds allows a higher visibility of the operating conditions.

CALPEDA ROMANIA - INFINITY PUMPS SRL
Tel: 0268.33.47.47 / 0722.244.944
vanzari@calpeda.ro | www.calpeda.ro

EASYMAT

Variable speed system driven by frequency converter

PATENTED

Features

Constant pressure
The Easymat via a frequency inverter keeps the pressure constant as the flow demand changes.

Energy saving
The variable speed operation ensures that only the energy required by the plant at any instant is used.

System reliability
Because the easymat is independent of the pumped liquid it's operation is not affected by fluid impurity.
A float switch can also be integrated to further protect against dry running.

Flexibility
Thanks to it's patented design the easymat does not come into contact with the pumped fluid. This provides for more flexibility during installation eliminating the need for pipe-work modifications or the installation of isolating valves.

Easy to use
The easymat has a clear display making it very simple to set-up.

Cascade control mode
The system flexibility allows via a microprocessor for cascade operation of two easymat's via one pressure transducer.

Construction

Variable speed system driven by frequency converter, for the pressure control in domestic and residential plants.
The system is connected to the delivery pipe providing for simple installation and better cooling (patented) making the unit more compact and easy to assemble.
Easymat is supplied with one **pressure transducer**, G 1/4 connection and 1.5 m cable length.

Applications

Automatic frequency inverter control for use on pumps to increase network pressure.
The system maintains constant pressure whilst the controlling the pump operation against changing system demand.
For protection of the pumps:
– Against dry running
– Against operations with closed connection ports
– Against overcurrent of the motor
– Against overvoltage and undervoltage of the power supply

Operating conditions

EASYMAT MM - Input voltage: 1~ 230V ±10%
- Output voltage: 1~ 230V
EASYMAT MT - Input voltage: 1~ 230V ±10%
- Output voltage: 3~ 230V

Input frequency: 50-60 Hz
Output frequency: up to 70 Hz
Protection: IP 55
Max Ambient temperature: 40°C
Max liquid temperature: 40 °C
Minimum Flow: 3 l/min
Altitude: no higher than 1000 m, inside a closed environment.

Construction

(Standard execution)
The system comprises of:
- Frequency converter.
- Pressure transducer.
- Pipe housing.
- Fixing screws.
- Terminal board.
- Cable glands.
- Multi-hole gaskets.

Type

Type (single-phase)	Freqeuency converter max current output A	Standard power motor 230V kW
Easymat 9,2MM	9,2	0,37 - 1,5

Type (three-phase)	Freqeuency converter max current output A	Standard power motor 230V kW
Easymat 9,2MT	9,2	0,37 - 2,2

CALPEDA ROMANIA - INFINITY PUMPS SRL
Tel: 0268.33.47.47 / 0722.244.944
vanzari@calpeda.ro | www.calpeda.ro

EASYMAT

Variable speed system driven by frequency converter

Control Panel

Easymat is equipped with a control panel for simple system programming and parameter monitoring.

The **2 scroll buttons** are used to scroll the different operating parameters that EASYMAT can show.

At the same time you can use the 2 scroll buttons to move in the set up menu and to change the different options.

The **LCD custom display** gives an easy overview of the system situation and of the operating parameters.

The icons on the top and below the display area explain in which way EASYMAT is working and if there are problems on the system.

The four set-up buttons allow the operator to move between and set-up the menu's and to start and stop the pump. The symbols help to make the function of each button clear.
With these 4 buttons and the 2 scroll buttons you can manage all the set-up and operating parameters without the use of an other control panel or computer.

4.93.410

Display LCD

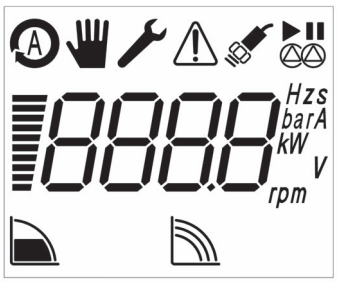

The integrated LCD custom display gives you an easy overview of the system situation and operating parameters.

DISPLAY AREA
The display area gives the status of the parameters of the pump.

The **OPERATING ICONS** show in which mode the system is operating:

Constant pressure mode
The system keeps the pressure constant when the quantity of water requested by the user changes.
The user can choose the operating pressure according his needs.

Fixed speed mode
The system works at a fixed speed that user can choose according his needs.

The **SYSTEM ICONS** show in which way the system is operating:

Auto Mode
The icon shows that the system is operating in auto mode (constant pressure mode), the constant pressure mode it is indicated by the icon on the lower part of the display.

Manual Mode
The icon show that the system is operating in manual mode (fixed speed mode), with the navigation buttons the user can change the speed, the fixed speed mode is indicated by the icon on the lower part of the display.

Set-up Mode
The icon shows that the set-up menu is activated, in this mode it is possible to change all the operating parameters of the EASYMAT.
With the navigations buttons it is possible to scroll the parameters and, if necessary, change them.

Sensor State
indicates the state of the pressure transducer connected to the EASYMAT, if lit it indicates that the pressure transducer is working, if it is blinking there is a fault or a incorrect connection of the pressure transducer.

Alarm
It indicates that there is a fault on the system, the error number appears on the display area.

Cascade Mode
It indicates that the multi-pump mode (up to 2 pumps) is working, the upper icon shows if the pump connected with the frequency converter is running or is in stand-by, the lower icon indicates if the pump is the master pump (the icon is lit) or the slave pump (the icon is blinking).

CALPEDA ROMANIA - INFINITY PUMPS SRL
Tel: 0268.33.47.47 / 0722.244.944
vanzari@calpeda.ro | www.calpeda.ro

EASYMAT

Variable speed system driven by frequency converter

Overview

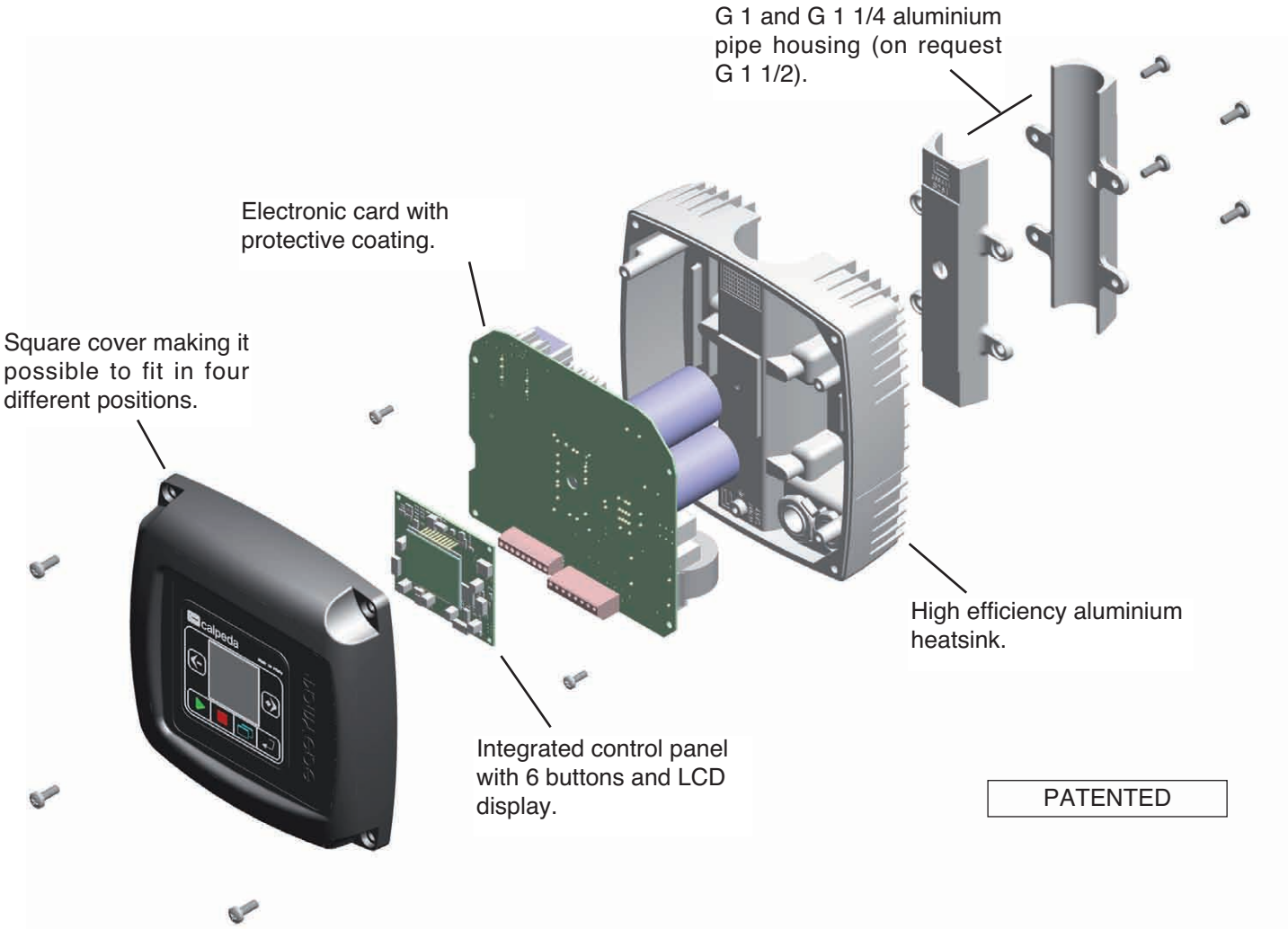

Dimensions and weights

Weight kg 1,9

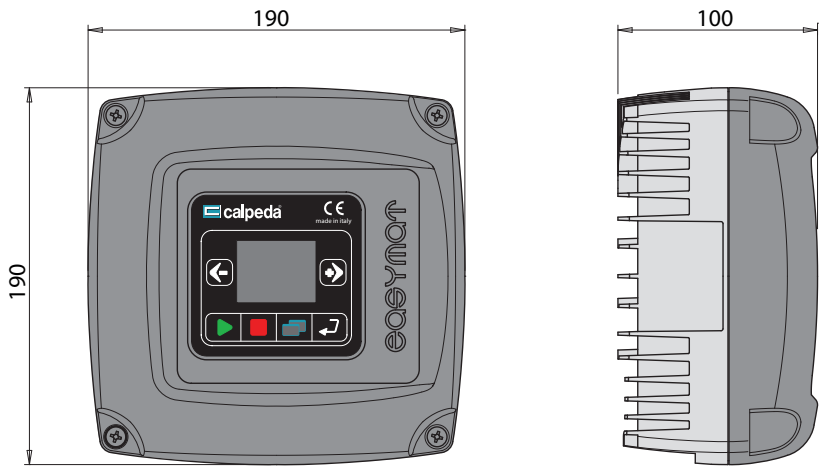

CALPEDA ROMANIA - INFINITY PUMPS SRL
Tel: 0268.33.47.47 / 0722.244.944
vanzari@calpeda.ro | www.calpeda.ro

EASYMAT

Variable speed system driven by frequency converter

Installation example

One pump installation scheme

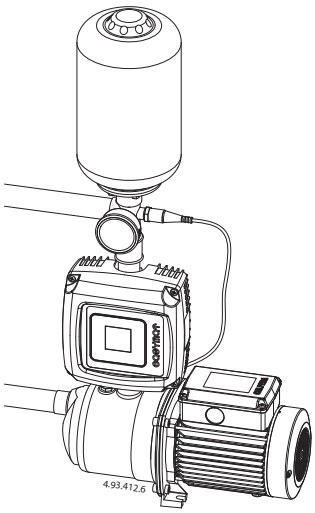

Two pumps installation scheme

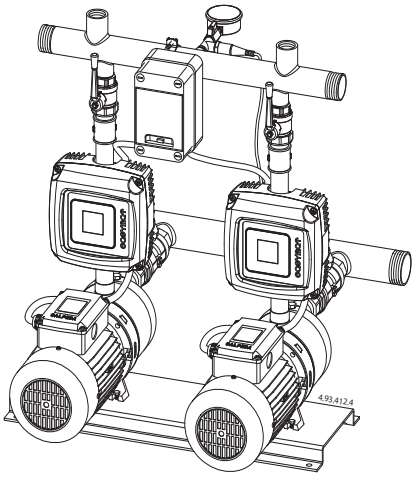

Three pumps installation scheme

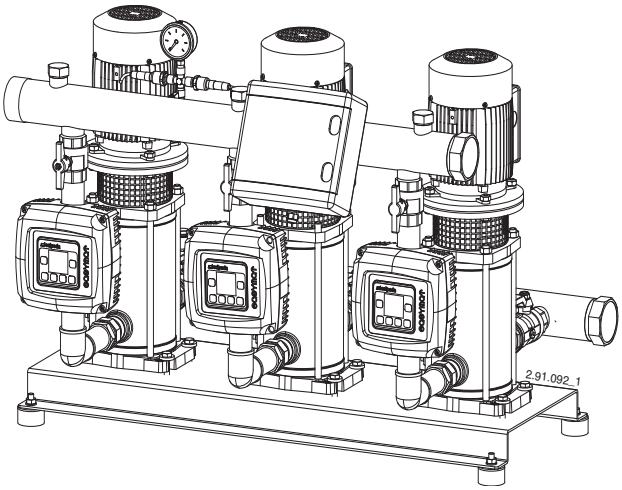

Plant conversion scheme

Existing fixed speed version

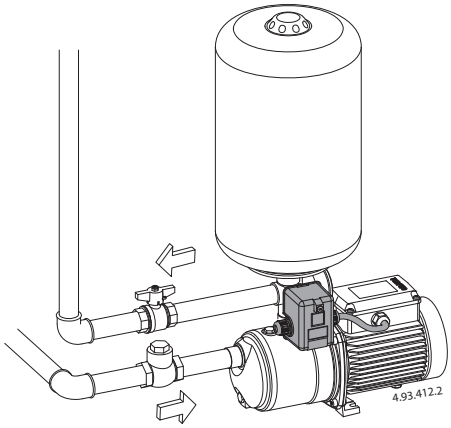

With EASYMAT it is easy to create a variable speed system starting from a existing fixed speed system without disturbing the existing pipe-work.

To create the variable speed system it is only necessary to:

- Disconnect the pressure switch from the system and, in the same housing connect the pressure transducer.
- Connect EASYMAT to the pipe.
- Connect EASYMAT to electric motor.
- Connect the supply cable to the electric grid.

Variable speed system version

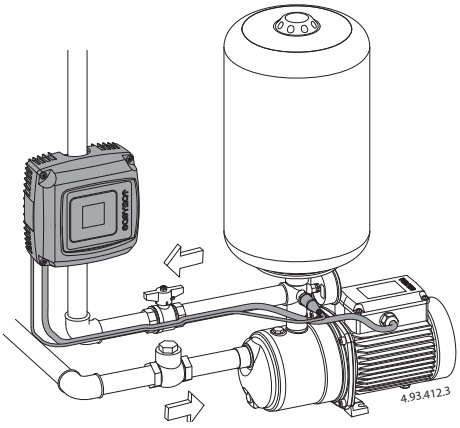

CALPEDA ROMANIA - INFINITY PUMPS SRL
Tel: 0268.33.47.47 / 0722.244.944
vanzari@calpeda.ro | www.calpeda.ro

VARIOMAT 2 Variable speed system driven by frequency converter

Features

Constant pressure
The Variomat 2 via a frequency inverter keeps the pressure constant as the flow demand changes.

Energy saving
The variable speed operation ensures that only the energy required by the plant at any instant is used.

System reliability
A float switch can also be integrated to further protect against dry running.

Easy to use
The Variomat 2 has a clear display making it very simple to set-up.

Cascade control mode
The system flexibility allows via a microprocessor for cascade operation of two variomat's.

Construction

Variable speed system driven by frequency converter, for the pressure control in domestic and residential plants.
The unit more compact and easy to assemble.
Variomat 2 is supplied with integrated pressure transducer.
Connection ports are available with G 1 1/4 and G 1 1/2 thread and are interchangeable.

Applications

Automatic frequency inverter control for use on pumps to increase network pressure.
The system maintains constant pressure whilst the controlling the pump operation against changing system demand.

For protection of the pumps:
– Against dry running
– Against operations with closed connection ports
– Against overcurrent of the motor
– Against overvoltage and undervoltage of the power supply

Operating conditions

Standard voltage: 400 V ±10% (380-415V) three-phase
Max working pressure: 16 bar.
Frequency: 50-60 Hz
Protection: IP 65
Max Ambient temperature: 60°C
Max liquid temperature up to 60 °C
Minimum Flow: 1 l/min
Altitude: no higher than 1000 m, inside a closed environment.

Construction

(Standard execution)
The system comprises of:
- Frequency converter.
- Pressure transducer.
- Pipe housing.
- Fixing screws.
- Terminal board.
- Cable glands.
- Multi-hole gaskets.

Type

Type (single-phase)	Freqeuency converter max current output A	Standard power motor 400V kW
VARIOMAT VTT2/A 9	9	0,75 - 3
VARIOMAT VTT2/A 12	12	4 - 5,5
VARIOMAT VTT2/A 16	16	7,5

Dimensions and weights

Weight kg 5

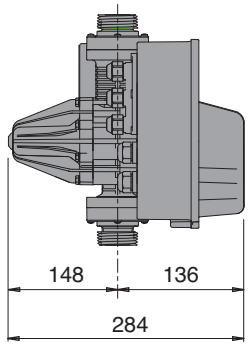

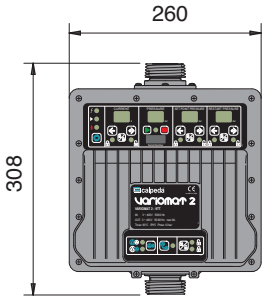

Diagram of head loss

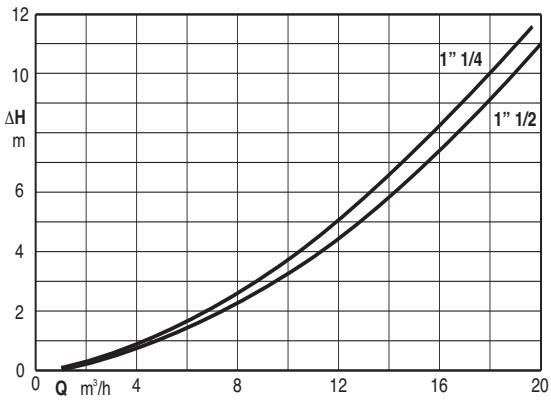

CALPEDA ROMANIA - INFINITY PUMPS SRL
Tel: 0268.33.47.47 / 0722.244.944
vanzari@calpeda.ro | www.calpeda.ro

VARIOMAT 2 Variable speed system driven by frequency converter

Control Panel

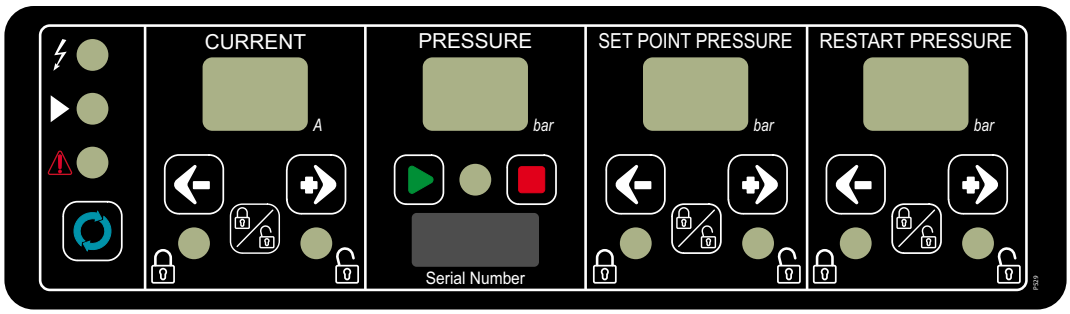

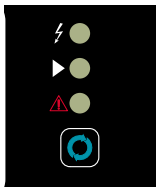

Status indications and system reset
The three leds give the informations about the system operativity, the first led indicates the presence of supply, the second led indicates if the pump is operating and the third led indicates if an alarm has occurred in the system. The Reset button allows to manually restart the system when an alarm occur.

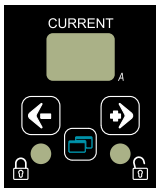

Programming of the nominal current and absorbed current display
The 2 digit display allows to visualize the nominal motor current (in programming mode) , during the operating time of the system the display visualizes the line absorbed current. The buttons allow to set and change the nominal motor current.

Pressure display and start/stop of the frequency converter
The display allows to visualize the operating pressure of the system, the buttons allow to start and stop manually the frequency converter.

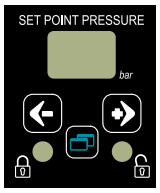

Programming of the set-point pressure
The display allows to visualize the set-point pressure of the system, the buttons allow to change the set –point pressure value.

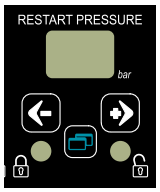

Programming of the re-start pressure
The display allows to visualize the re-start pressure of the system, the buttons allow to change the re-start pressure value.

Installation example

One pump installation scheme

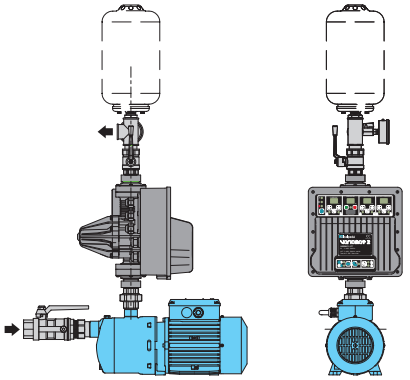

Two pumps installation scheme

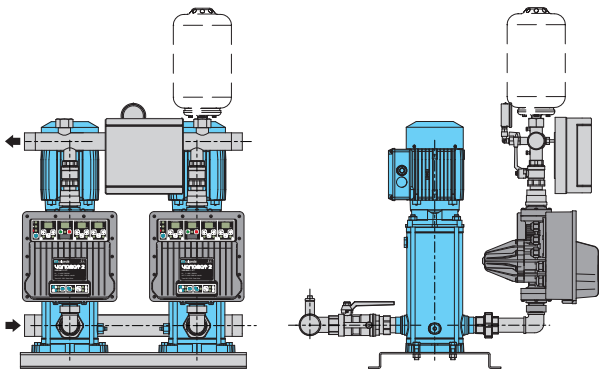

CALPEDA ROMANIA - INFINITY PUMPS SRL
Tel: 0268.33.47.47 / 0722.244.944
vanzari@calpeda.ro | www.calpeda.ro

I-MAT Variable speed system driven by frequency converter

Benefits

Flexibility
I-MAT frequency converters are equipped with a software which provide different operating modes in order to cover a wide range of applications.

Reliability
The high efficiency heatsink with integrated fans allows to cool the frequency converter independently from the motor, to provide a higher reliability of the system.

Safety
The shape of the I-MAT frequency converters allows to separate the signal terminals area, from the power terminals area, in this way the user can operate on the signals connections in safety conditions.

Easy to use
The integrated control panel allows to program all the parameters directly on the frequency converters. Moreover it's possible to remove the control panel and remote it with a connection cable.

Communications between units
The system flexibility allows, with an optional electronic card, to assemble more units making them communicate together. The system is capable to manage variable speed pumps (up to 6) and fixed speed pump (up to 5).

Construction

Variable speed system driven by frequency converter for the motor control in the water supply applications and in the production/distribution of hot/cold water.
I-MAT is an integrated control system which, applied to the motor, allows to manage a wide range of applications and operating modes.

Applications

Frequency converter for automatic pump control suitable for:
- water supply
- water transport and distribution
- production and distribution of hot/cold water
- water treatment

For protection of the pumps:
- Against dry running
- Against operations with closed connection ports
- Against overcurrent of the motor
- Against overvoltage and undervoltage of the power supply
- Against unbalance or missing supply phases.

Operating conditions

Standard voltage: 400 V ±10% (380-415V) three-phase
Input voltage: 3~380V-10% ÷ 3~480V+5%
Output voltage: 0 ÷ 100% of the input voltage
Input frequency: 50-60 Hz
Output frequency: up to 70 Hz
Protection: IP55
Max Ambient Temperature: 50°C
Altitude: no higher than 1000 m, inside closed environment.

Construction

(standard execution)
The system comprises of:
- Frequency converter
- Removable control panel
- Power terminal board
- Signals terminal board
- Cable glands

On request:
- Adapter for motor mounting
- Adapter for wall mounting
- Pressure and temperature transducer
- Main switch
- Line filter and output filter

Type

Type (three-phase)	Freqeuency converter max current output A	Standard power motor 400V kW
I-MAT 5,2 TT-A	5,2	0,55 ÷ 1,8
I-MAT 11,2 TT-B	11,2	2,2 ÷ 4
I-MAT 25,8 TT-C	25,8	5,5 ÷ 11
I-MAT 65,4 TT-D	65,4	15 ÷ 30
I-MAT 119 TT-E	119	37 ÷ 55

CALPEDA ROMANIA - INFINITY PUMPS SRL
Tel: 0268.33.47.47 / 0722.244.944
vanzari@calpeda.ro | www.calpeda.ro

I-MAT Variable speed system driven by frequency converter

Operating modes

Constant pressure mode
Constant pressure keeps the pressure constant at a fixed value set by the user. This value of pressure is automatically kept by the system to provide to the final user a constant pressure even with different water demand, within the maximum performance of the motor-pump system.

Proportional pressure modes
Proportional pressure reduces the pressure of the pump (and as a consequence, the operating frequency) proportionally with the water demand of the system.

Constant temperature mode
In this operating mode the system is used to keep the temperature at a constant value in a specified system point.

Constant flow mode
Constant flow mode grants that system change the speed of the pump in order to keep constant the flow which pass inside a flow meter.

Fixed speed mode
In this operating mode the system work as a fixed speed pump. The speed of the pump could be set by the user between a range of speeds, or controlled by an external signal.

Night mode
The night mode is an optional mode which allows to reduce the speed of the pump if the temperature in the system decreases below a set value, this operating mode can be used with all operating modes over described.

Control Panel

I-MAT is equipped with a control panel that allows to carry out the set-up of the system and to monitor all system parameters.

The control panel is inside a IP55 enclosure which is possible to rotate and install in remote positions.

It is possible use the control panel in remote positions by means a cable with M12 connectors (standard cable).

The LCD custom display gives an easy overview of the system situation and of the operating parameters.

The icons on the top and below the display area explain in which way i-MAT is working and if there are some problems on the system.

The 2 scroll buttons are used to scroll the different operating parameters that i-MAT can show. At the same time you can use the 2 scroll buttons to move in the set up menu and to change the different options.

The 4 set-up buttons are created to enter and to move on the set-up menus and to start and to stop the pump. The symbols help to understand the function of each button. With these 4 buttons and the 2 scroll buttons you can manage all the set-up and operating parameters without the use of another control panel or computers.

CALPEDA ROMANIA - INFINITY PUMPS SRL
Tel: 0268.33.47.47 / 0722.244.944
vanzari@calpeda.ro | www.calpeda.ro

I-MAT Variable speed system driven by frequency converter

Overview

Control panel
The integrated control panel gives the customer the possibility to set all the parameters of the frequency converter.

Optional modules
On the front side of the frequency converter are predisposed compartments for connecting the optional modules. This solution allows to install the modules without dismantling the frequency converter.

Main switch
The frequency converters have the possibility (optional) to install a main switch.

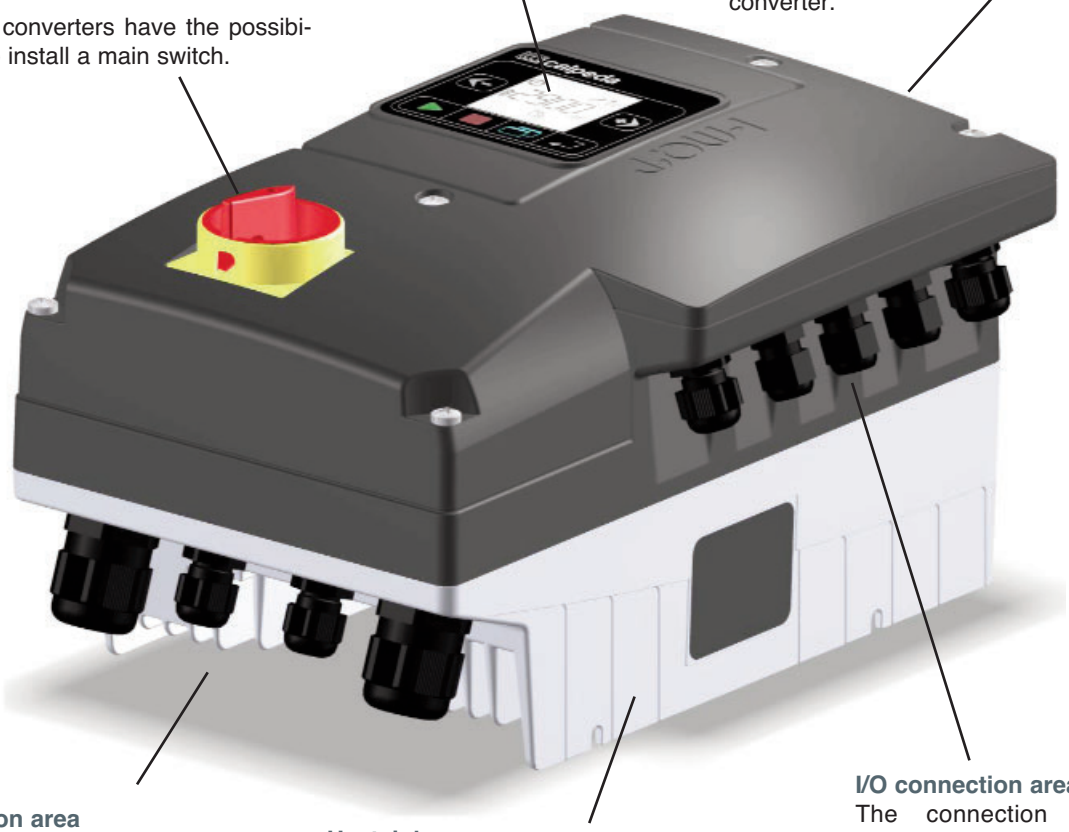

Power connection area
The connection area is protected by a safety cover, there are dedicated clamps to connect one PTC probe.

Heatsink
The high efficiency heat sink cooled by fans guarantees a high reliability. The side connection system allows an easy connection with the motors.

I/O connection area
The connection area for the input/outputs is separated from the power connection area, this solution allows to connect external.

Dimensions and weights

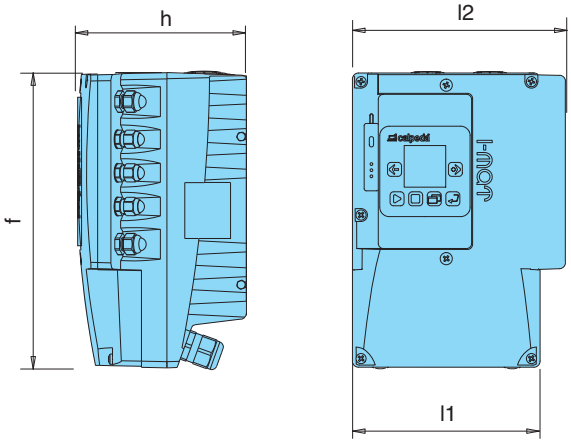

TYPE	mm				kg
	h	f	l1	l2	
I-MAT 5,2 TT-A	165	263	170	190	5,8
I-MAT 11,2 TT-B	165	292	185	210	6,7
I-MAT 25,8 TT-C	207	336	255	281	13,5
I-MAT 65,4 TT-D	288	460	320	350	33
I-MAT 119 TT-E	336	700	424	455	59

CALPEDA ROMANIA - INFINITY PUMPS SRL
Tel: 0268.33.47.47 / 0722.244.944
vanzari@calpeda.ro | www.calpeda.ro

I-MAT Variable speed system driven by frequency converter

Installation example

One pump installation scheme

MXH EI

NM EI

NR EI

MXV EI

Two pumps installation scheme

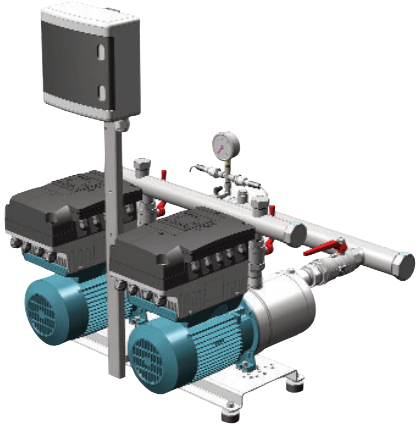
2MXH

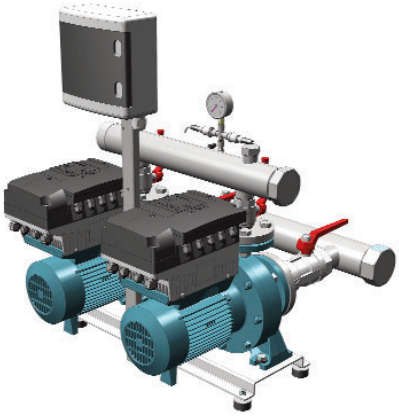
2NM

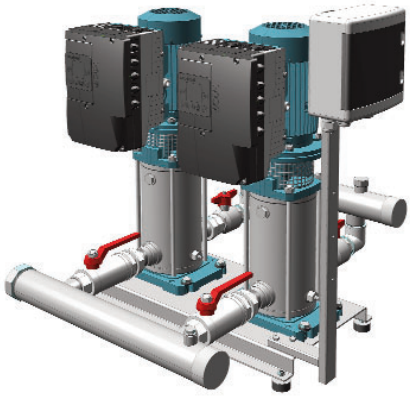
2MXV

Three pumps installation scheme

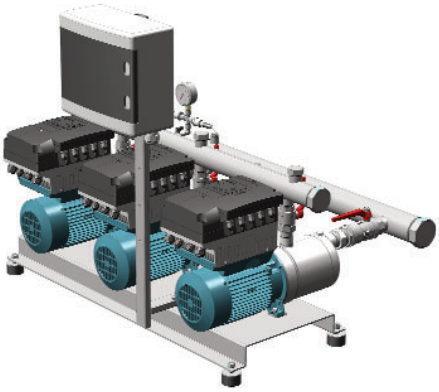
3MXH

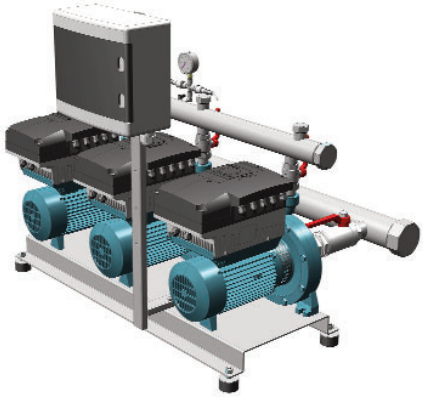
3NM

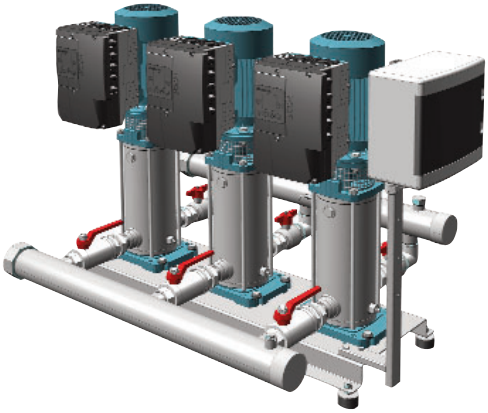
3MXV

CALPEDA ROMANIA - INFINITY PUMPS SRL
Tel: 0268.33.47.47 / 0722.244.944
vanzari@calpeda.ro | www.calpeda.ro

BS

Fixed speed pump units

Variable speed pump units with frequency converter

CALPEDA ROMANIA - INFINITY PUMPS SRL
Tel: 0268.33.47.47 / 0722.244.944
vanzari@calpeda.ro | www.calpeda.ro

Index

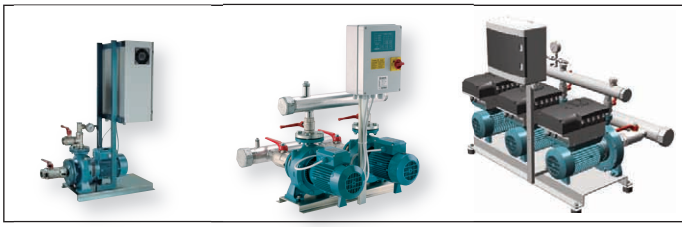

Pressure boosting sets with **NM,NMD** pag. 497

BS .F fixed speed 1/3 pumps

BS1V.F, BS.V variable speed with **(frequency converter into the control panel)** 1/3 pumps
variable speed with **I-MAT** 2/3 pumps

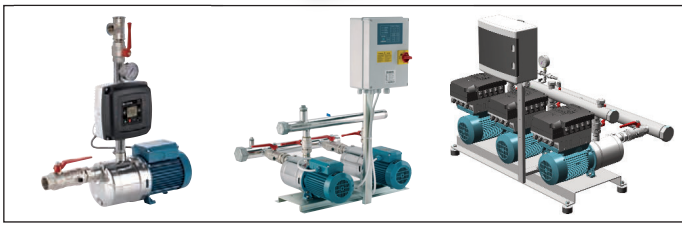

Pressure boosting sets with **MXH** pag. 515

BS .F fixed speed 1/3 pumps

BS1V.F, BS.V variable speed with **(frequency converter into the control panel)** 1/3 pumps
variable speed with **EASYMAT** 1/3 pumps
variable speed with **VARIOMAT** 1/2 pumps
variable speed with **I-MAT** 2/3 pumps

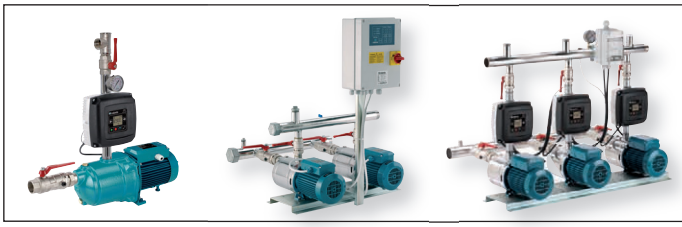

Pressure boosting sets with **MGP, MXP** pag. 527

BS .F fixed speed 2 pumps

BS1V.F, BS.V variable speed with **(frequency converter into the control panel)** 2 pumps
variable speed with **EASYMAT** 1/3 pumps

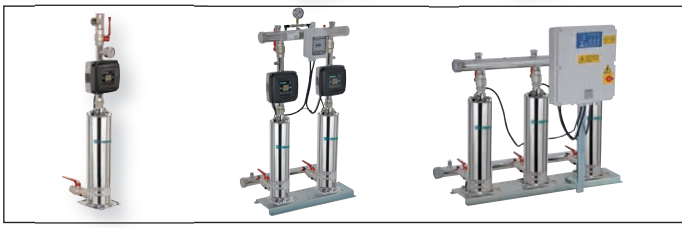

Pressure boosting sets with **MPSU** pag. 536

BS .F fixed speed 1/3 pumps

BS1V.F, BS.V variable speed with **(frequency converter into the control panel)** 1/3 pumps
variable speed with **EASYMAT** 1/3 pumps

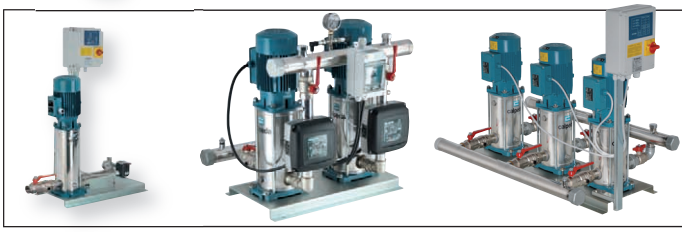

Pressure boosting sets with **MXVB** pag. 543

BS .F fixed speed 1/3 pumps

BS1V.F, BS.V variable speed with **(frequency converter into the control panel)** 1/3 pumps
vvariable speed with **EASYMAT** 1/3 pumps
variable speed with **VARIOMAT** 1/2 pumps
variable speed with **I-MAT** 2/3 pumps

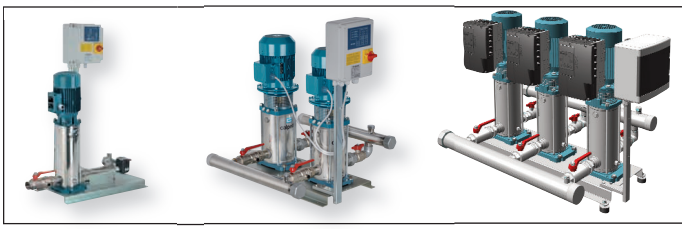

Pressure boosting sets with **MXV** pag. 556

BS .F fixed speed 1/3 pumps

BS1V.F, BS.V variable speed with **(frequency converter into the control panel)** 1/3 pumps
variable speed with **I-MAT** 2/3 pumps

Pressure boosting sets with **NG, NGL, NGX** pag. 572

BS .F fixed speed 2 pumps

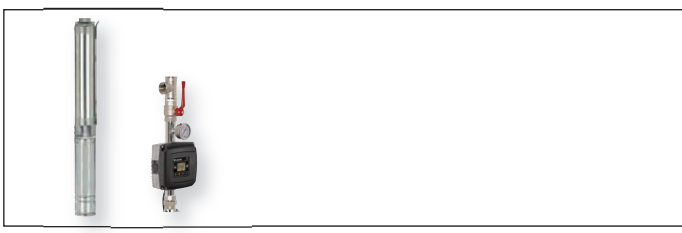

Pressure boosting sets with **4SDF** pag.576

BS .V variable speed with **EASYMAT** 1 pump

TO SELECT A PRESSURE BOOSTING SET page 616

CALPEDA ROMANIA - INFINITY PUMPS SRL
Tel: 0268.33.47.47 / 0722.244.944
vanzari@calpeda.ro | www.calpeda.ro

Pressure Boosting Sets

Designation

BS M 2V 2 MXV 25/204 - I TT
BS M 1V 1F 2 MXV 25/204 - E MM
BS M 2F 2 MXV 25/204

- Pump type
- Nr of pumps
- **T** Three-phase motor
- **M** Sigle-phase motor
- **T** Three-phase supply
- **M** Sigle-phase supply
- **E= EASYMAT** series,
  V= VARIOMAT 2 series,
  I= I-MAT series
- **1F** 1 fixed speed pump
- **2F** 2 fixed speed pumps
- **3F** 3 fixed speed pumps
- **1V1F** 1 variable speed pump and 1 fixed speed pump
- **1V2F** 1 variable speed pump and 2 fixed speed pumps
- **1V** 1 variable speed pump
- **2V** 2 variable speed pumps
- **3V** 3 variable speed pumps
- Sigle-phase supply (no indication: three-phase supply)
- Product series

To select a Pressure Boosting Set see technical appendix at page 616.

For booster sets with 4, 5 and 6 pumps contact our Technical Sales Department.

CALPEDA ROMANIA - INFINITY PUMPS SRL
Tel: 0268.33.47.47 / 0722.244.944
vanzari@calpeda.ro | www.calpeda.ro

Operation

BSF
with 2 and 3 fixed speed pumps

Construction
Pressure boosting sets with automatic operation, consisting in 2 and 3 pumps on a common baseplate, with sunction and delivery manifolds, gate and non-return valves, pressure switches, pressure gauge, control panel and from 100 to 1000 litres diaphragm tank (on request).

BS 2F
2 fixed speed pumps

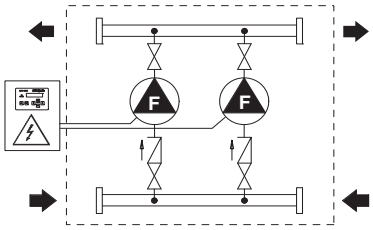

BS 3F
3 fixed speed pumps

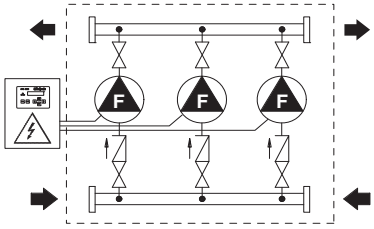

Operation
The control panel, with electronic card, manages the pump operation, the changeover of pump starting sequence and it stops the system when there is no air in the tank (patented system).
Pumps starting in a cascade sequence, with a signal from the pressure switches.

BS 2F
2 fixed speed pumps

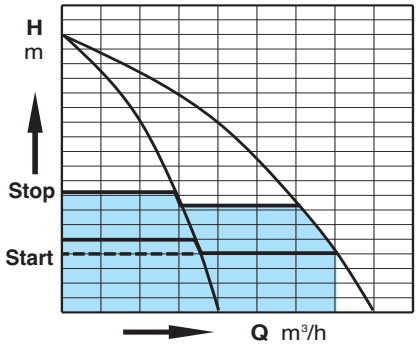

BS 3F
3 fixed speed pumps

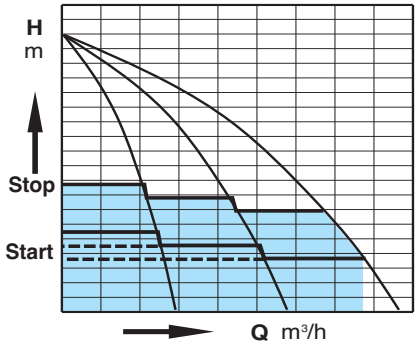

CALPEDA ROMANIA - INFINITY PUMPS SRL
Tel: 0268.33.47.47 / 0722.244.944
vanzari@calpeda.ro | www.calpeda.ro

BSV.F.

1 variable speed pump (with frequency converter)
1 to 5 fixed speed pumps

Construction

Pressure boosting sets with automatic operation, consisting of 1 variable speed pump with frequency converter and from 1 to 5 fixed speed pumps, assembled on a common baseplate, with suction and delivery manifolds, gate and non-return valves, pressure gauge, control panel and 20 litres diaphragm tank (on request).

BS 1V1F
2 pumps: 1variable
1 fixed

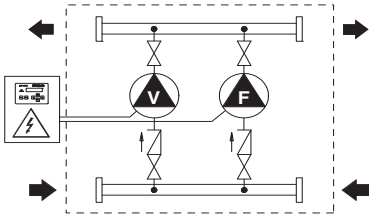

BS 1V2F
3 pumps: 1variable
2 fixed

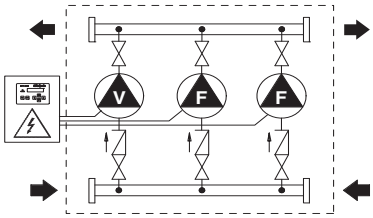

Operation

The control panel, with electronic card, manages the pump operation, the changeover of fixed speed pumps starting sequence
Pumps starting is in a cascade sequence, with a signal from the pressure transducer.
Constant pressure is guaranteed by the variable speed pumps, while fixed speed pumps start when the request is higher than the capacity of the variable speed pump.

BS 1V1F
2 pumps: 1variable
1 fixed

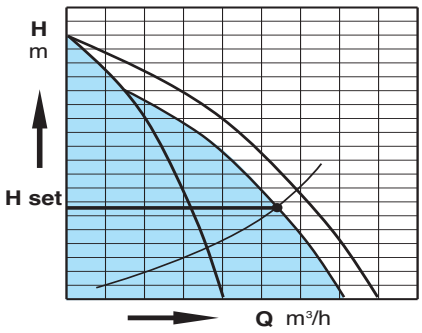

BS 1V2F
3 pumps: 1variable
2 fixed

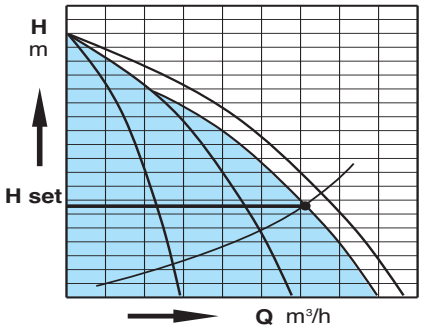

BSV
2-6 variable speed pumps (with frequency converter)

Construction

Pressure boosting sets with automatic operation, consisting of variable speed pumps (from 1 to 6) with frequency converter, assembled on a common baseplate, with suction and delivery manifolds, gate and non-return valves, pressure transducer, pressure gauge, control panel and 20 litres diaphragm tank (on request).

BS 2V
2 variable speed pumps

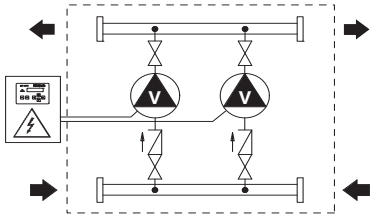

BS 3V
3 variable speed pumps

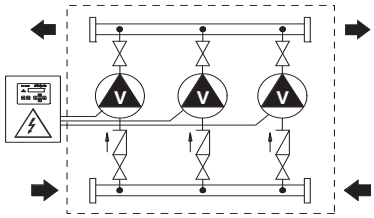

Operation

The control panel, with electronic card, manages the pump operation, the changeover of pumps starting sequence.
Pumps starting in a cascade sequence, with a signal from the pressure transducer.

BS 2V
2 variable speed pumps

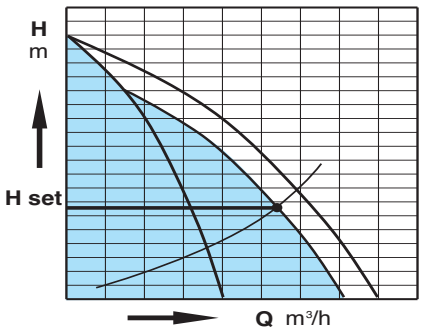

BS 3V
3 variable speed pumps

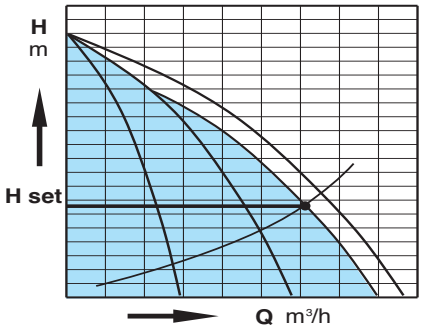

CALPEDA ROMANIA - INFINITY PUMPS SRL
Tel: 0268.33.47.47 / 0722.244.944
vanzari@calpeda.ro | www.calpeda.ro

Pressure Boosting Sets

Fixed speed pump units

New electrical control panels
for fixed speed pump units.

New electrical control panels for pressurisation units, all with electronic card with microprocessors, for managing pump operation.

The microprocessor carries out continuous secure checks during all the various work phases of the pumps and incorporates all necessary functions, thus reducing electrical and electronic components inside the panel.

In particular:
- pumps starting in a cascade sequence according to water demand.
- changeover of pump starting sequence.
- delay start-up of the 2nd/3rd pump in case of breakdown of pressure switch 1 or after a power cut.
- avoid pump starting in case of water hammering.
- activate the alarm when pressure 1 fails.
- activate the alarm when air cushion in the vessel drops.
- stop the pump when air cushion is over.

Maximum clarity for all signals
The status of the unit can easily be identified on the front of the electronic card with the following signals:
- Power on.
- No water.
- Failure.
- Pump running.
- Thermal block.
- Pump automatic operation.
- Pump stop.

Maximum simplicity of control
The front of electronic card features the following signals and controls:
- AUT-STOP push-button (1 for each pump)
- MAN push-button (1 for each pump)
- RESET push-button.

Optional remote control
The RA 100 panel enables a remote warning light and acoustic signal.

Control panel for units up to 6 pumps
Using the MPS 6000 (Multi Pumps System) electronic card it is possible to control pressure units up to a maximum of 6 fixed speed pumps with a single pressure calibration.

Automatic air supply systems
The pump control panels are completed by microprocessor controlled systems for automatic air supply in the pressure vessels by means of a compressor or solenoid valve.

Operation
For booster sets made up to three pumps: according to the pressure decrease in the system, the pressure switches make the pumps to start in cascade mode and the starting changeover is made by the microprocessor.

For sets made of 4, 5, 6 pumps: Operation controlled by a microprocessor with signal from a pressure transducer. The pumps operate with only one pressure setting.

CALPEDA ROMANIA - INFINITY PUMPS SRL
Tel: 0268.33.47.47 / 0722.244.944
vanzari@calpeda.ro | www.calpeda.ro

Pressure Boosting Sets

Variable speed pump units with frequency converter

New electrical control panels
for variable speed pump units.

New electrical control panels for pressurisation units with variable speed pumps.
These are indispensible in all those cases where constant pressure is required and when high pressure pumps are being controlled.
All the various working phases are managed and controlled by the MPS 4000 (Multi Pumps System) electronic card with microprocessor, which can operate up to 6 pumps working simultaneously.

Maximum clarity of signals
All the various calibration parameters appear as messages on the display of the MPS 4000 electronic card.
If there are any faults or defects a message appears on the display giving details of the problem.

Possibility of remote control
The pump status can be displayed and the unit can be controlled by means of a special computer program.
It is possible to obtain a remote warning light and acoustic signal on the RA 100 panel.

Constant or increased pressure
All the pumps can work with the same pressure value (set point), or, for systems with high head losses, the pressure can be increased depending on the number of pumps operating.

Silent operation
Motors working at reduced speed and check valves that close gradually mean that operation is particularly quite.

Long life for pumps
All the mechanical components of the pumps and motors are stressed to a minimum, due to the variable speed operation.

Energy savings
The motors consume only the precise level of power necessary moment to moment, in order to supply the quantity of water required by the system.

No more high capacity vessels
The use of inverters means that high capacity pressure vessels and membrane vessels are no longer necessary. Even units with high flowrate pumps only require a small number of 20 litre membrane vessels.

Great versatility
The great versatility of the MPS 4000 electronic card enables the construction of special units with operational logics different from those of normal pressurisation units, depending on the requirements and characteristics of the systems.

Operation
Depending on water consumption, one or more pumps are activated, all at variable speed, in order to guarantee the quantity of water required at the set pressure.

CALPEDA ROMANIA - INFINITY PUMPS SRL
Tel: 0268.33.47.47 / 0722.244.944
vanzari@calpeda.ro | www.calpeda.ro

Pressure Boosting Sets

Variable speed pump units with EASYMAT

EASYMAT
for variable speed pump units.

Variable speed system driven by frequency converter, for the pressure control in domestic and residential plants.
The system maintains constant pressure whilst the controlling the pump operation against changing system demand.

Maximum clarity of signals

Easymat is equipped with a control panel for simple system programming and parameter monitoring.

The **2 scroll buttons** are used to scroll the different operating parameters that EASYMAT can show.

At the same time you can use the 2 scroll buttons to move in the set up menu and to change the different options.

The LCD custom display gives an easy overview of the system situation and of the operating parameters.

The icons on the top and below the display area explain in which way EASYMAT is working and if there are problems on the system.

The four set-up buttons allow the operator to move between and set-up the menu's and to start and stop the pump. The symbols help to make the function of each button clear.

With **these 4 buttons and the 2** scroll buttons you can manage all the set-up and operating parameters without the use of an other control panel or computer

Operation

Depending on water consumption, one or more pumps are activated, all at variable speed, in order to guarantee the quantity of water required at the set pressure.

CONSTANT PRESSURE MODE:
The system keeps the pressure constant when the quantity of water requested by the user changes.
The user can choose the operating pressure according his needs.

FIXED SPEED MODE:
The system works at a fixed speed that user can choose according his needs.

The system is connected to the delivery pipe providing for simple installation and better cooling (patented) making the unit more compact and easy to assemble.
Easymat is supplied with one pressure transducer, G 1/4 connection and 1.5 m cable length.

For protection of the pumps:

– Against dry running
– Against operations with closed connection ports
– Against overcurrent of the motor
– Against overvoltage and undervoltage of the power supply

Silent operation

Motors working at reduced speed and check valves that close gradually mean that operation is particularly quite.

Long life for pumps

All the mechanical components of the pumps and motors are stressed to a minimum, due to the variable speed operation.

Energy savings

The motors consume only the precise level of power necessary moment to moment, in order to supply the quantity of water required by the system.

No more high capacity vessels

The use of inverters means that high capacity pressure vessels and membrane vessels are no longer necessary. Even units with high flowrate pumps only require a small number of 20 litre membrane vessels.

CALPEDA ROMANIA - INFINITY PUMPS SRL
Tel: 0268.33.47.47 / 0722.244.944
vanzari@calpeda.ro | www.calpeda.ro

Pressure Boosting Sets

Variable speed pump units with VARIOMAT2

VARIOMAT2
for variable speed pump units.

Variable speed system driven by frequency converter, for the pressure control in domestic and residential plants.
The system maintains constant pressure whilst the controlling the pump operation against changing system demand.

Maximum clarity of signals
Status indications and system reset
Programming of the nominal current and absorbed current display
Pressure display and start/stop of the frequency converter
Programming of the set-point pressure
Programming of the re-start pressure

Operation
Depending on water consumption, one or more pumps are activated, all at variable speed, in order to guarantee the quantity of water required at the set pressure.

CONSTANT PRESSURE MODE:

The system keeps the pressure constant when the quantity of water requested by the user changes.
The user can choose the operating pressure according his needs.

Variomat 2 is supplied with integrated pressure transducer.
Connection ports are available with G 1 1/4 and G 1 1/2 thread and are interchangeable.

For protection of the pumps:
– Against dry running
– Against operations with closed connection ports
– Against overcurrent of the motor
– Against overvoltage and undervoltage of the power supply

Silent operation
Motors working at reduced speed and check valves that close gradually mean that operation is particularly quite.

Long life for pumps
All the mechanical components of the pumps and motors are stressed to a minimum, due to the variable speed operation.

Energy savings
The motors consume only the precise level of power necessary moment to moment, in order to supply the quantity of water required by the system.

No more high capacity vessels
The use of inverters means that high capacity pressure vessels and membrane vessels are no longer necessary. Even units with high flowrate pumps only require a small number of 20 litre membrane vessels.

CALPEDA ROMANIA - INFINITY PUMPS SRL
Tel: 0268.33.47.47 / 0722.244.944
vanzari@calpeda.ro | www.calpeda.ro

Pressure Boosting Sets

Variable speed pump units with I-MAT

I-MAT
for variable speed pump units.
Variable speed system driven by frequency converter, for the pressure control in domestic and residential plants.
The system maintains constant pressure whilst the controlling the pump operation against changing system demand.

Maximum clarity of signals
I-MAT is equipped with a control panel that allows to carry out the set-up of the system and to monitor all system parameters.
The control panel is inside a IP55 enclosure which is possible to rotate and install in remote positions.
It is possible use the control panel in remote positions by means a cable with M12 connectors (standard cable).
The LCD custom display gives an easy overview of the system situation and of the operating parameters.

The icons on the top and below the display area explain in which way I-MAT is working and if there are some problems on the system.
The 2 scroll buttons are used to scroll the different operating parameters that I-MAT can show. At the same time you can use the 2 scroll buttons to move in the set up menu and to change the different options.

The 4 set-up buttons are created to enter and to move on the set-up menus and to start and to stop the pump. The symbols help to understand the function of each button. With these 4 buttons and the 2 scroll buttons you can manage all the set-up and operating parameters without the use of another control panel or computers.

Operation
Depending on water consumption, one or more pumps are activated, all at variable speed, in order to guarantee the quantity of water required at the set pressure.

Constant pressure mode
Constant pressure keeps the pressure constant at a fixed value set by the user. This value of pressure is automatically kept by the system to provide to the final user a constant pressure even with different water demand, within the maximum performance of the motor-pump system.

Proportional pressure modes
Proportional pressure reduces the pressure of the pump (and as a consequence, the operating frequency) proportionally with the water demand of the system.

Constant temperature mode
In this operating mode the system is used to keep the temperature at a constant value in a specified system point.

Constant flow mode
Constant flow mode grants that system change the speed of the pump in order to keep constant the flow which pass inside a flow meter.

Fixed speed mode
In this operating mode the system work as a fixed speed pump. The speed of the pump could be set by the user between a range of speeds, or controlled by an external signal.

Night mode
The night mode is an optional mode which allows to reduce the speed of the pump if the temperature in the system decreases below a set value, this operating mode can be used with all operating modes over described.

Silent operation
Motors working at reduced speed and check valves that close gradually mean that operation is particularly quite.

Long life for pumps
All the mechanical components of the pumps and motors are stressed to a minimum, due to the variable speed operation.

Energy savings
The motors consume only the precise level of power necessary moment to moment, in order to supply the quantity of water required by the system.

No more high capacity vessels
The use of inverters means that high capacity pressure vessels and membrane vessels are no longer necessary. Even units with high flowrate pumps only require a small number of 20 litre membrane vessels.

CALPEDA ROMANIA - INFINITY PUMPS SRL
Tel: 0268.33.47.47 / 0722.244.944
vanzari@calpeda.ro | www.calpeda.ro

BS. NM

Pressure boosting sets with 1 to 3 Centrifugal Pumps

Fixed speed pump or Variable speed pump (frequency converter)

Coverage chart

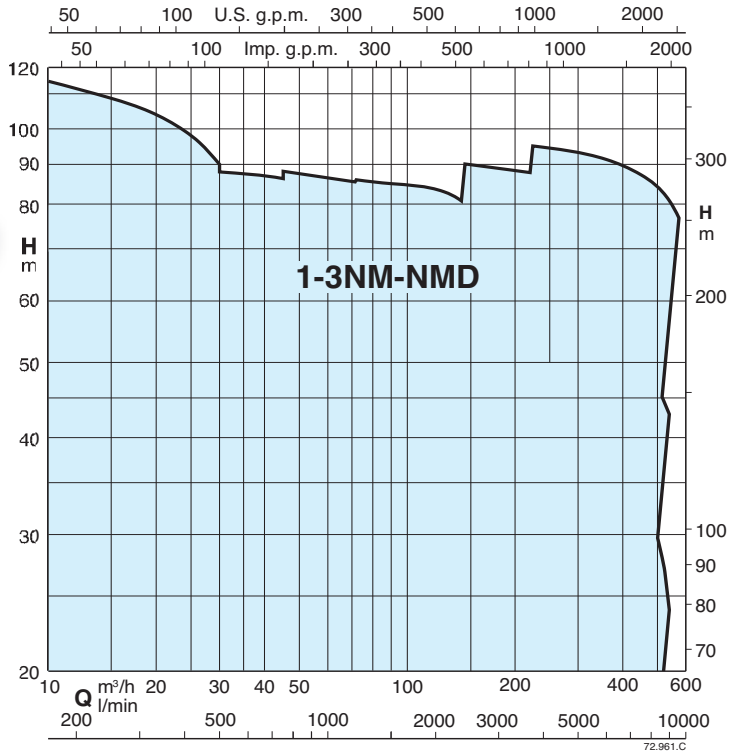

Operation

BS 1-6F **Pressure boosting sets with 1 to 6 fixed speed pump.**
Sets with 4,5 and 6 pumps on request.
Depending on the reduction of the pressure in the system, the pressure switches determine the starting up of the pumps in sequence and the microprocessor alternates the starts.

BS2-3V **Pressure boosting sets with 2 to 3 variable speed pumps (with I-MAT).**
Depending on water consumption, one or more pumps are activated, all at variable speed, in order to guarantee the quantity of water required at the set pressure.

BS1V2-5F **Pressure boosting sets with 1 variable speed pump (with frequency converter into the control panel) and from 1 to 5 fixed speed pumps**
Sets with 4,5 and 6 pumps on request.
According to the water consumption, one or more pumps start, one at variable speed and the others at fixed speed, to grant the water quantity required at the set pressure.

BS1-6V **Pressure boosting sets with 1 to 6 variable speed pumps (with frequency converter into the control panel).**
Sets with 4,5 and 6 pumps on request.
Depending on water consumption, one or more pumps are activated, all at variable speed, in order to guarantee the quantity of water required at the set pressure.

Construction

- Automatic pressure boosting plant consisting of 1 to 6 centrifugal pumps complete with ball, non return valve on the suction side and ball valves on the delivery side.

Suction and delivery manifolds for boosting sets with 2,3 pumps:
- stainless steel AISI 304 up to 2NM 40.. and 3NM 32...
- steel S235JR from 2NM 50.. and 3NM 40... .

Connections are located on the delivery manifold for the installation of vessels G1 connection.

Electrical control boards:
- with microprocessor for fixed speed pump units. Motor starting is D.O.L. up to 5,5 kW and Y/Δ for power rating 7,5 up to 55 kW.
- with frequency converter for variable speed pump units.

The unit includes one pressure gauge and three adjustable differential pressure switches or pressure transducer.

Applications

To supply water in civil and industrial buildings.
As pressure boosting pump to increase water pressure when needed (follow local rules).

Motors

2-pole induction motors, 50 Hz, n ≈ 2900 rpm, suitable for operation with frequency converter.
- Three-phase 230/400V ± 10% up to 3 kW;
  400/690V ± 10% for 4 kW to 55 kW;

Insulation class F.
Protection IP 54.
Constructed in accordance with: IEC 60034.
Other voltages and frequencies on request.

Vessels on request

When installing the unit, connect in the delivery section to a diaphragm or galvanised tank.
The recommended sized are shown in the following page.

Special features on request

Pressure boosting sets with 4,5 and 6 pumps.

CALPEDA ROMANIA - INFINITY PUMPS SRL
Tel: 0268.33.47.47 / 0722.244.944
vanzari@calpeda.ro | www.calpeda.ro

BS. NM

Pressure boosting sets with 1 to 3 Centrifugal Pumps
Fixed speed pump or Variable speed pump (frequency converter)

Coverage chart

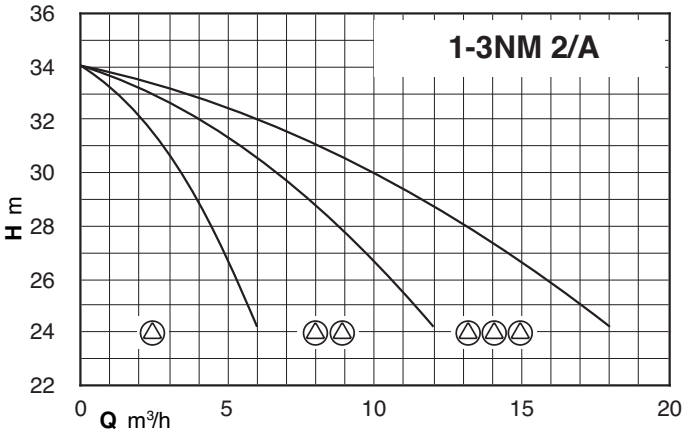

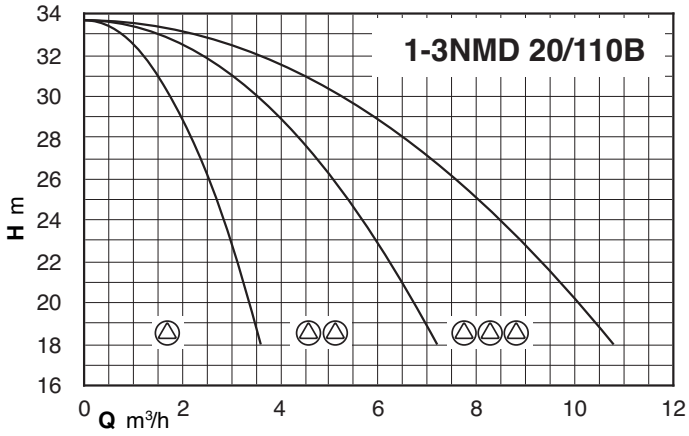

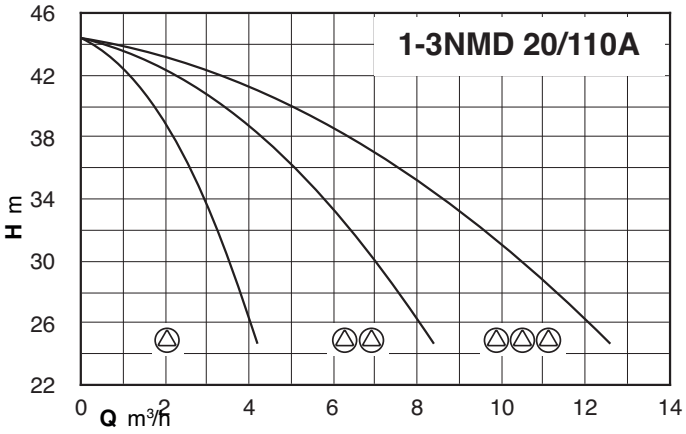

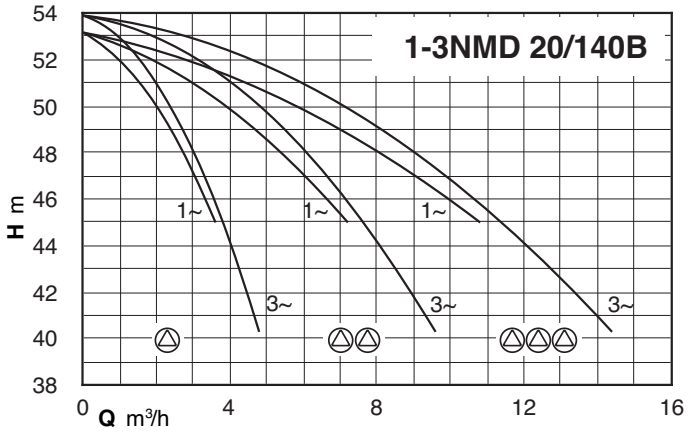

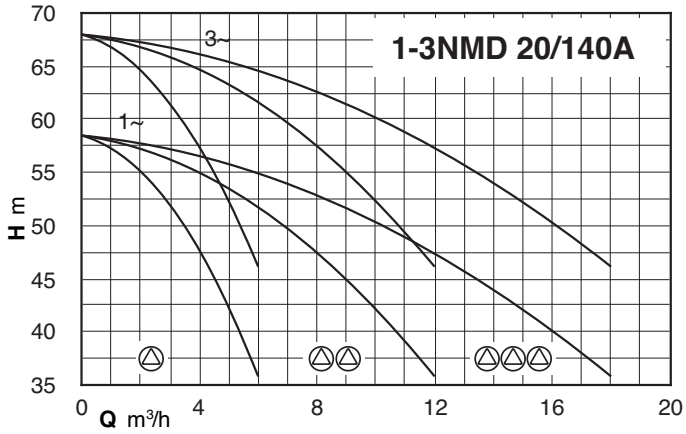

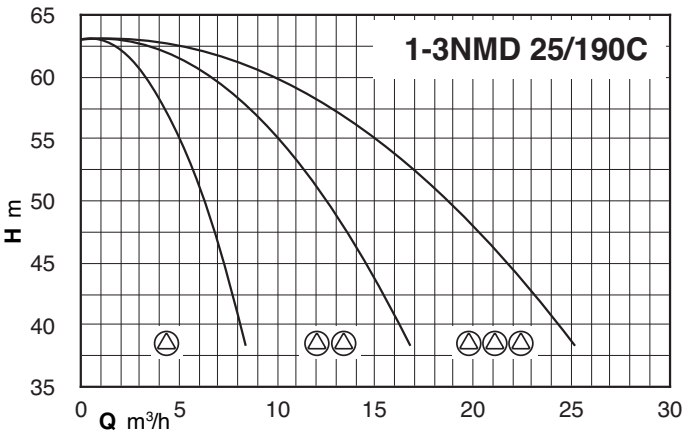

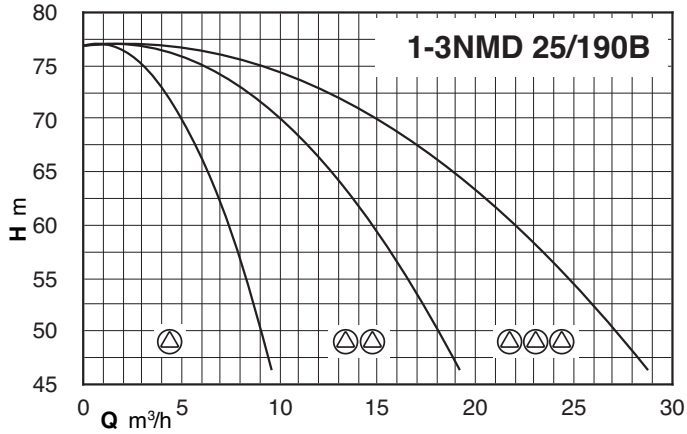

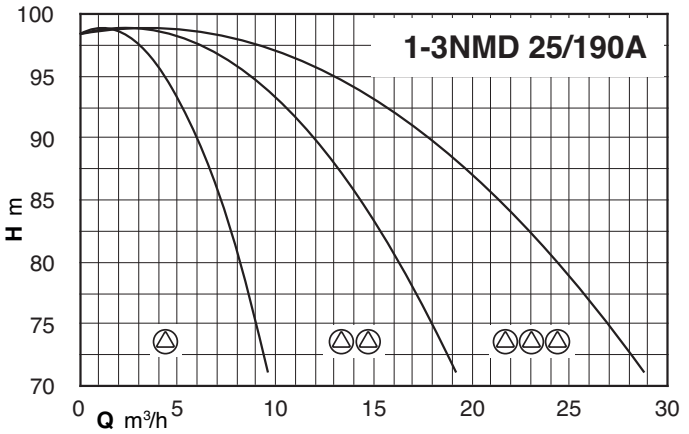

CALPEDA ROMANIA - INFINITY PUMPS SRL
Tel: 0268.33.47.47 / 0722.244.944
vanzari@calpeda.ro | www.calpeda.ro

BS. NM

Pressure boosting sets with 1 to 3 Centrifugal Pumps
Fixed speed pump or Variable speed pump (frequency converter)

Coverage chart

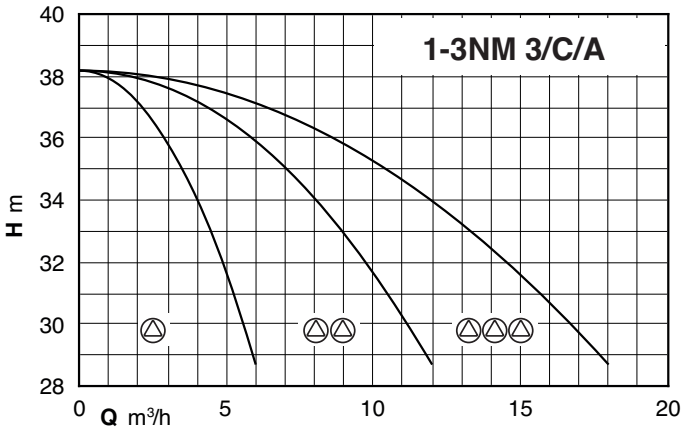

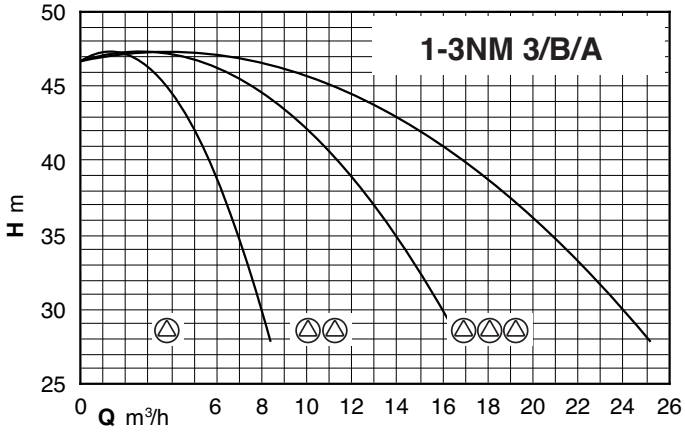

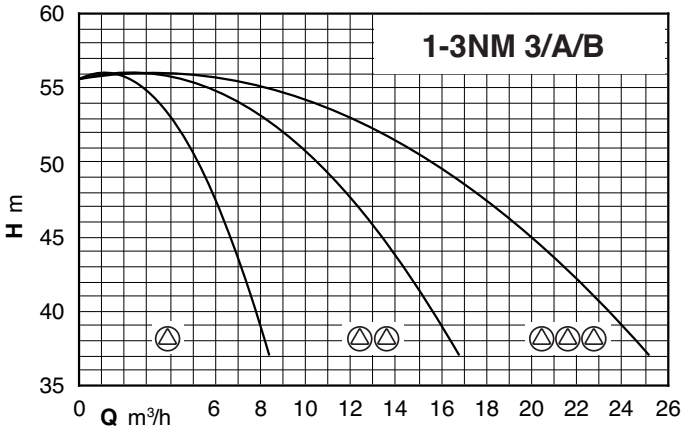

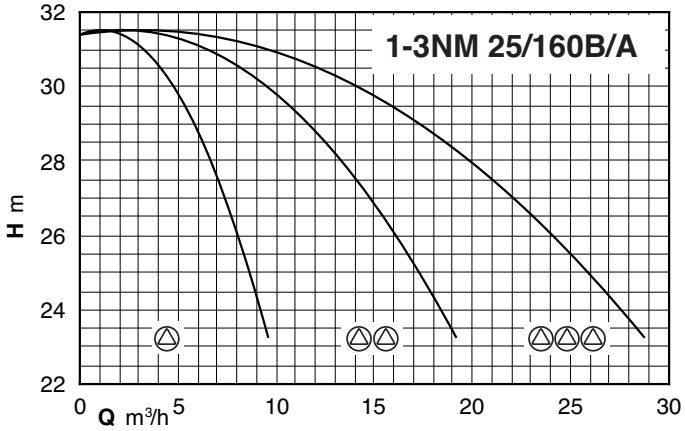

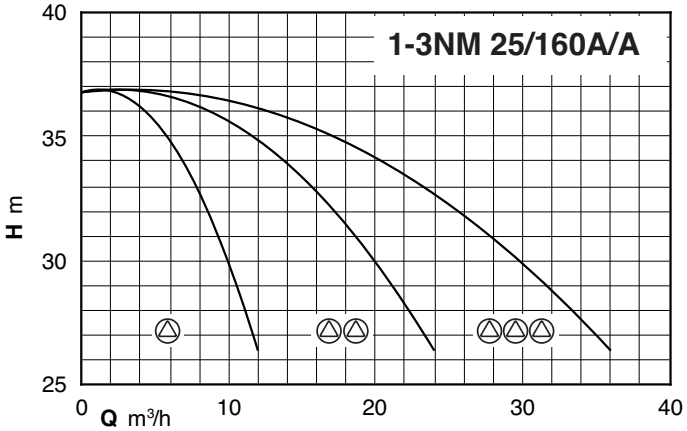

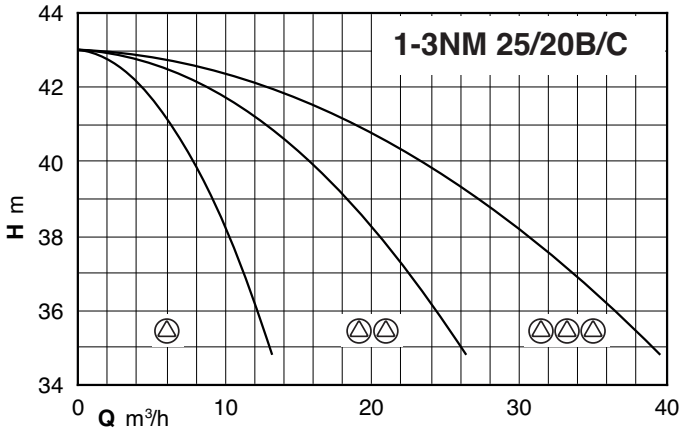

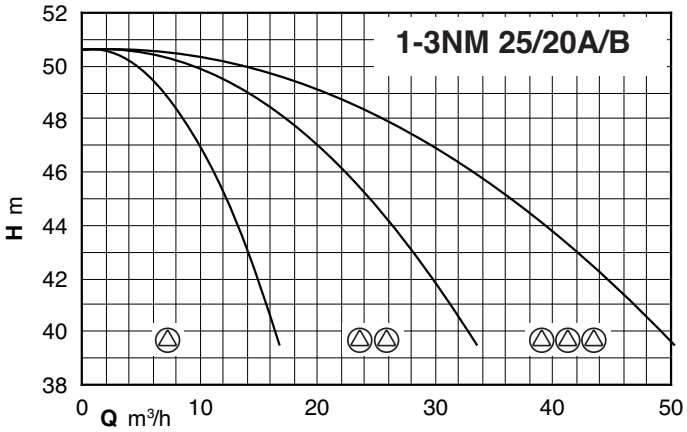

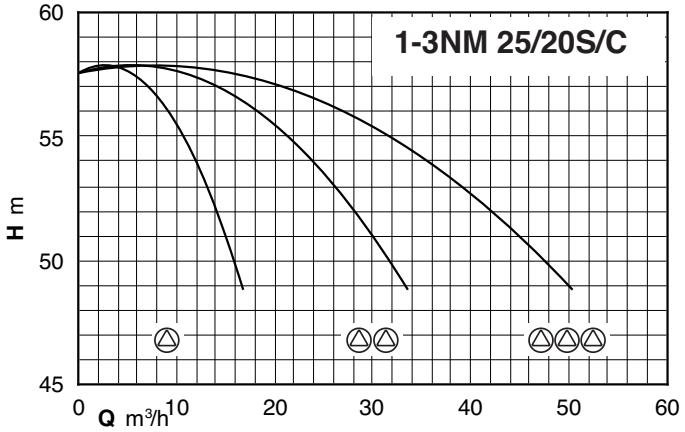

CALPEDA ROMANIA - INFINITY PUMPS SRL
Tel: 0268.33.47.47 / 0722.244.944
vanzari@calpeda.ro | www.calpeda.ro

BS. NM

Pressure boosting sets with 1 to 3 Centrifugal Pumps
Fixed speed pump or Variable speed pump (frequency converter)

Coverage chart

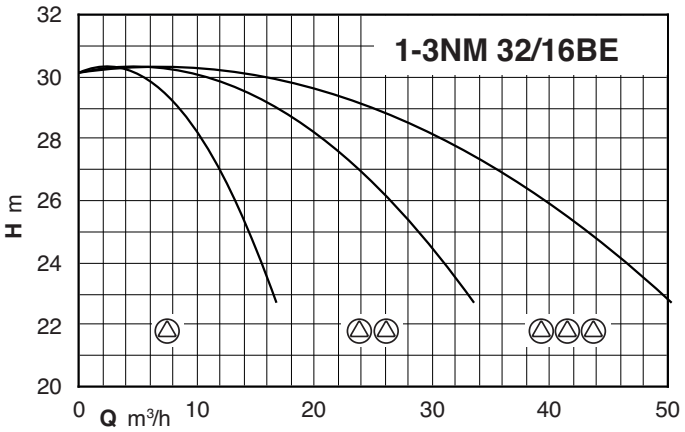

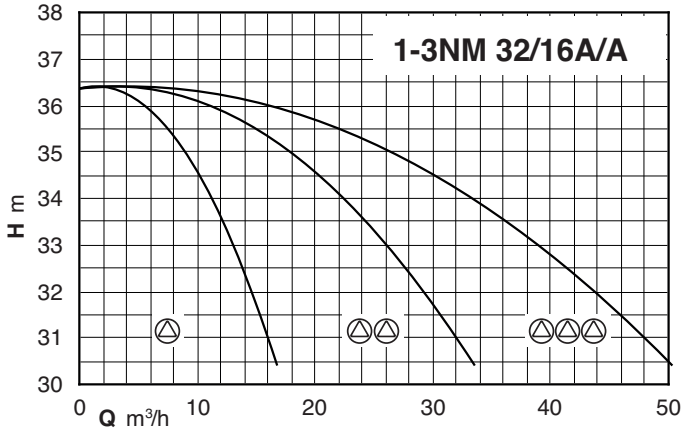

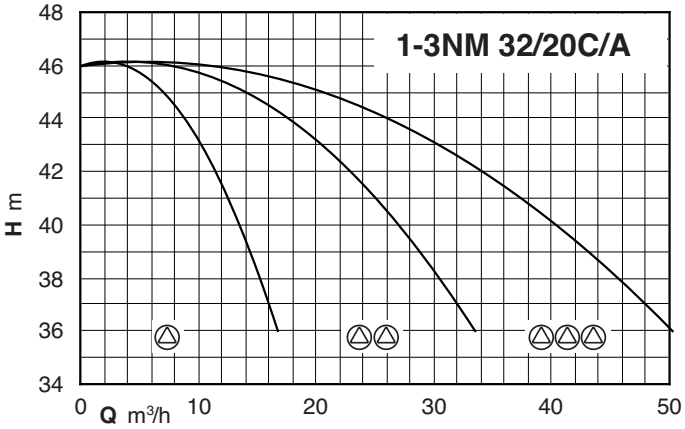

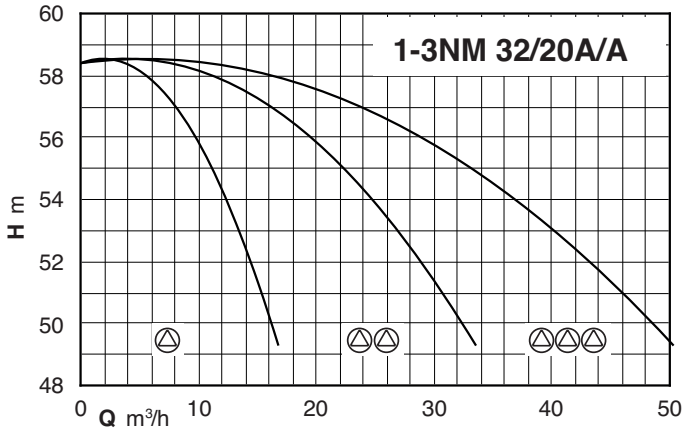

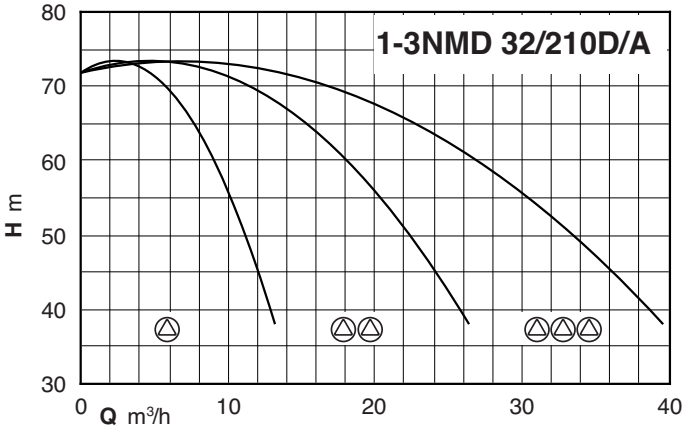

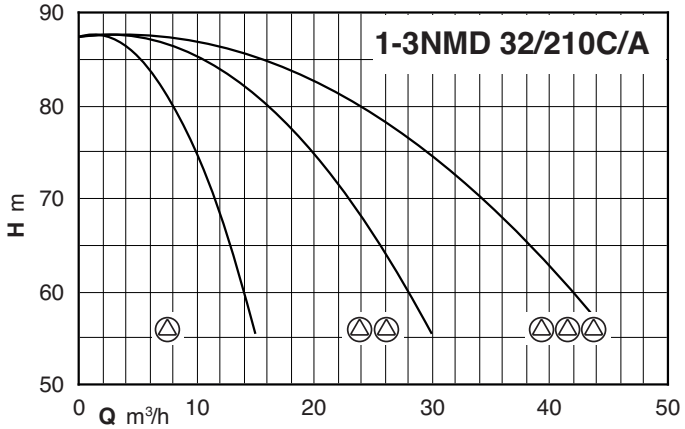

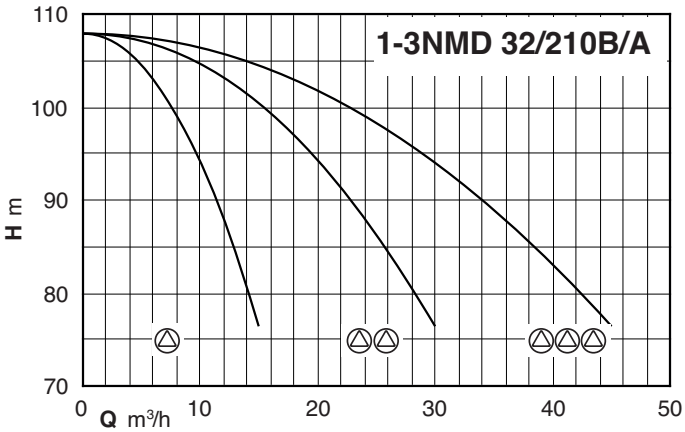

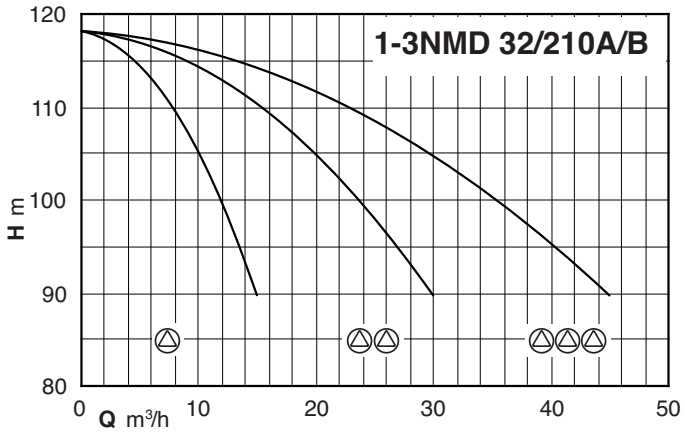

CALPEDA ROMANIA - INFINITY PUMPS SRL
Tel: 0268.33.47.47 / 0722.244.944
vanzari@calpeda.ro | www.calpeda.ro

BS. NM

Pressure boosting sets with 1 to 3 Centrifugal Pumps
Fixed speed pump or Variable speed pump (frequency converter)

Coverage chart

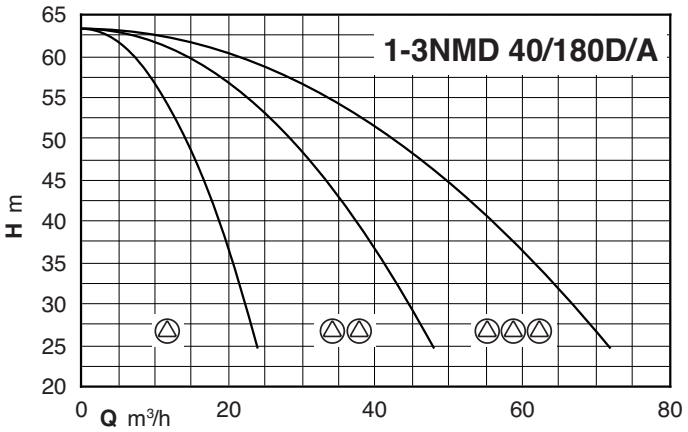

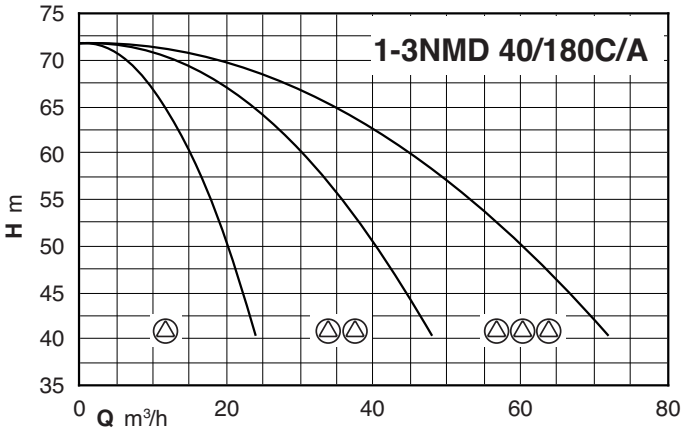

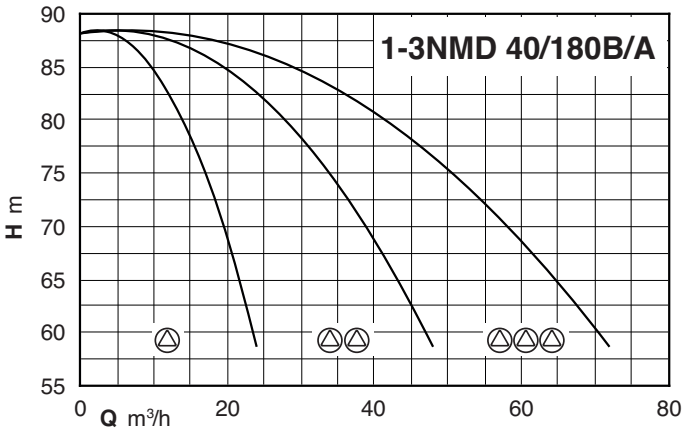

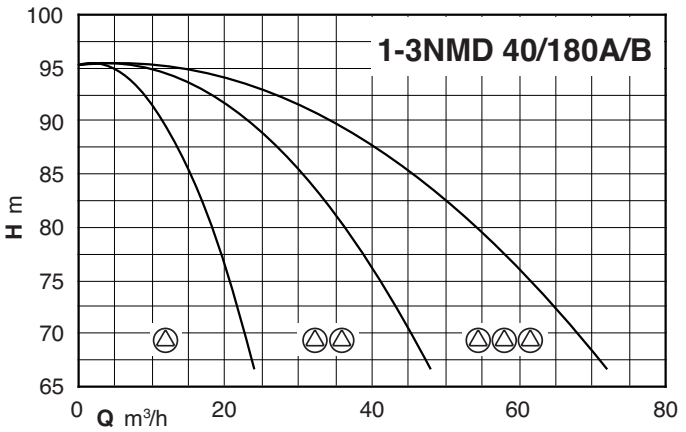

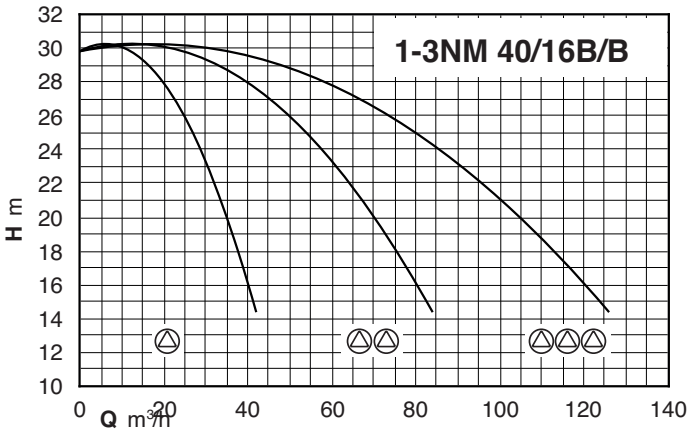

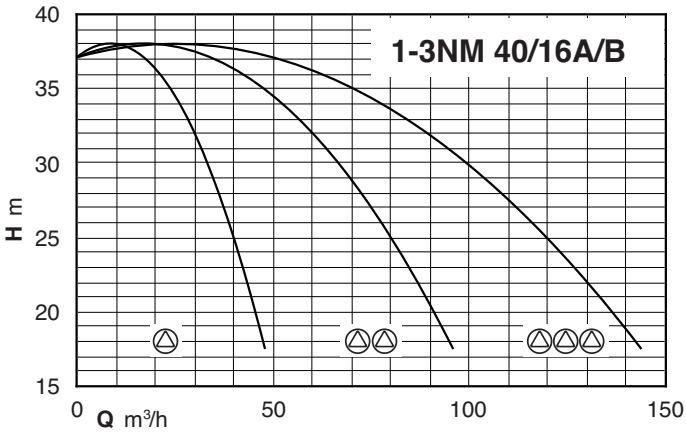

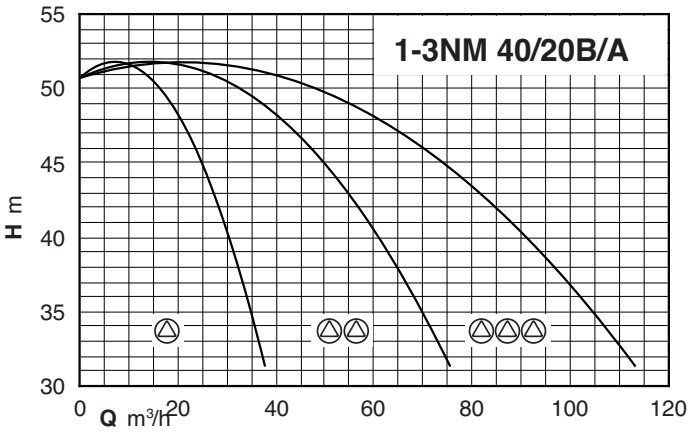

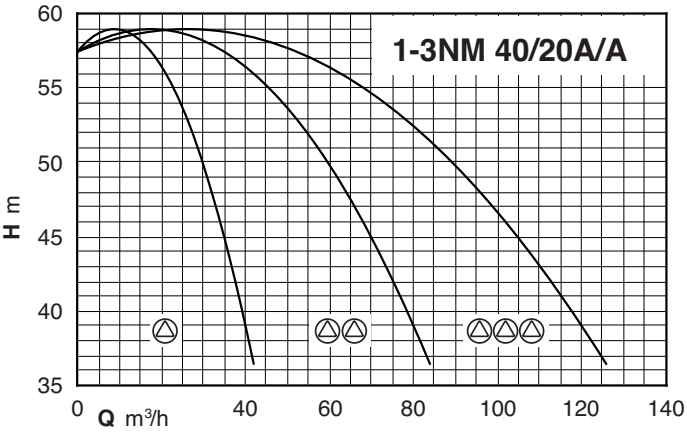

CALPEDA ROMANIA - INFINITY PUMPS SRL
Tel: 0268.33.47.47 / 0722.244.944
vanzari@calpeda.ro | www.calpeda.ro

BS. NM

Pressure boosting sets with 1 to 3 Centrifugal Pumps
Fixed speed pump or Variable speed pump (frequency converter)

Coverage chart

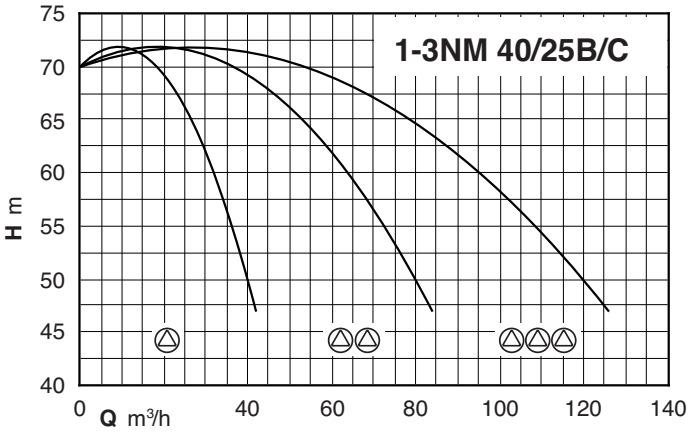

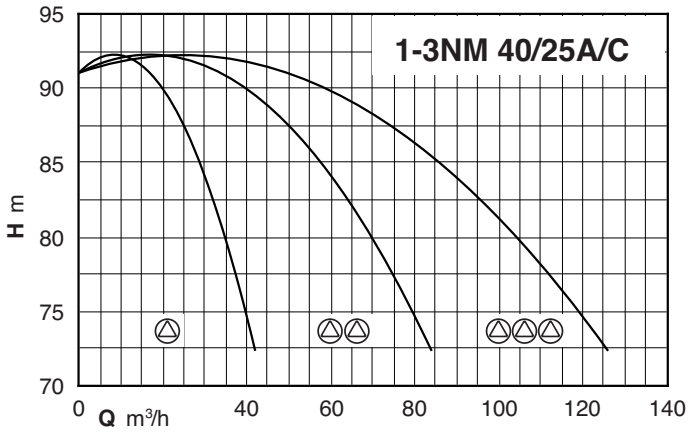

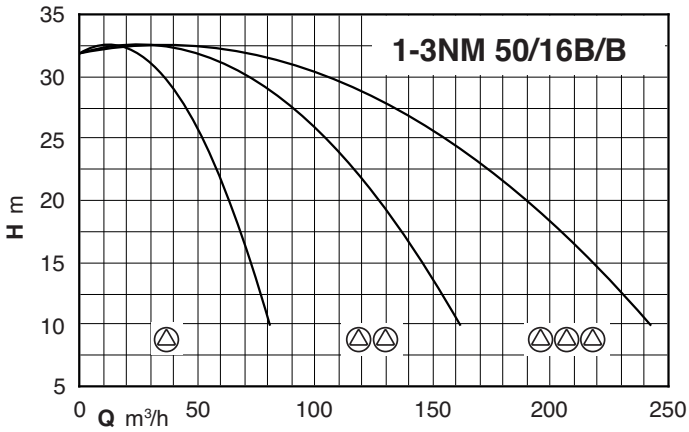

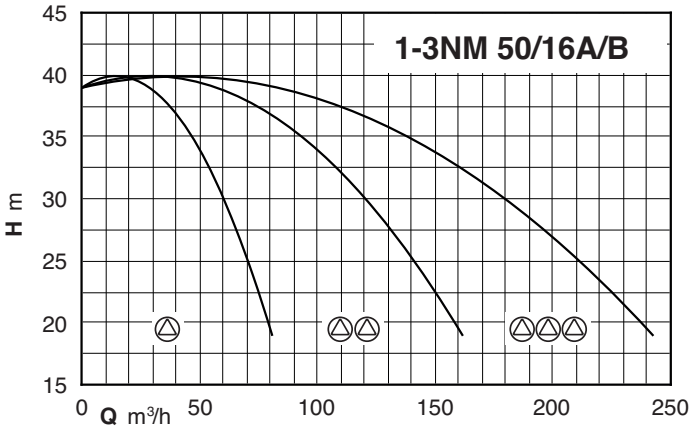

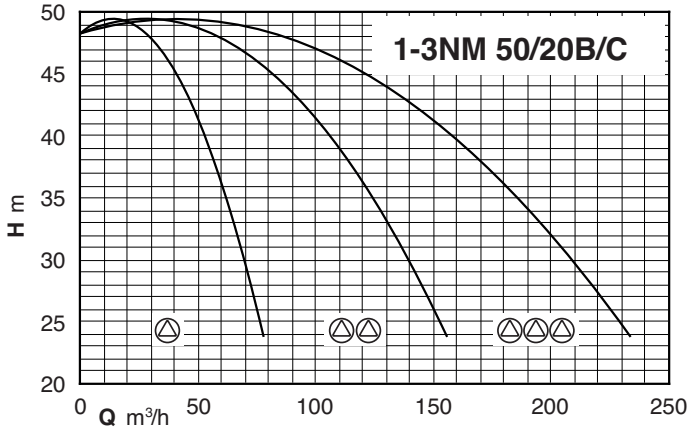

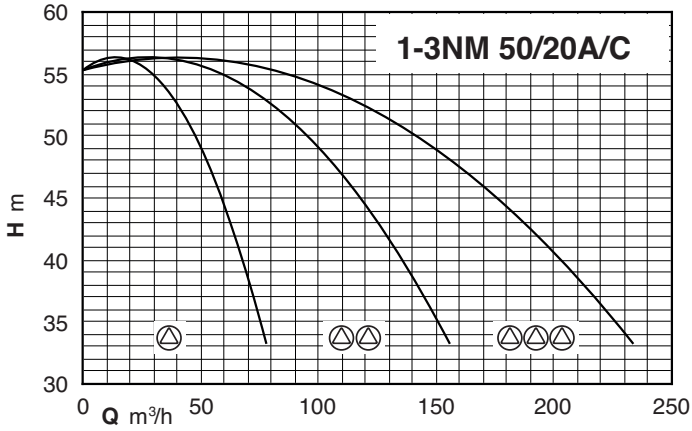

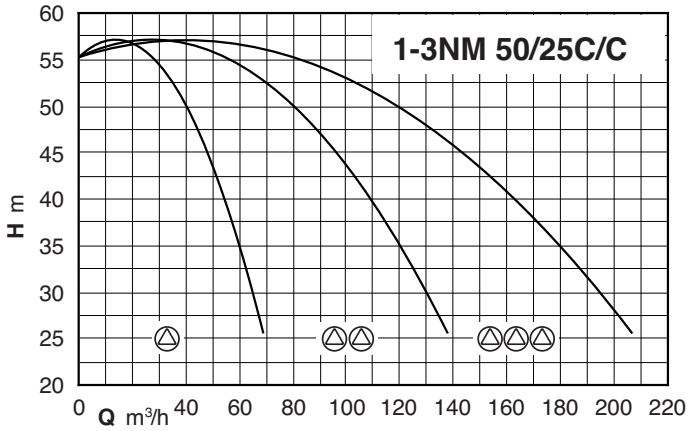

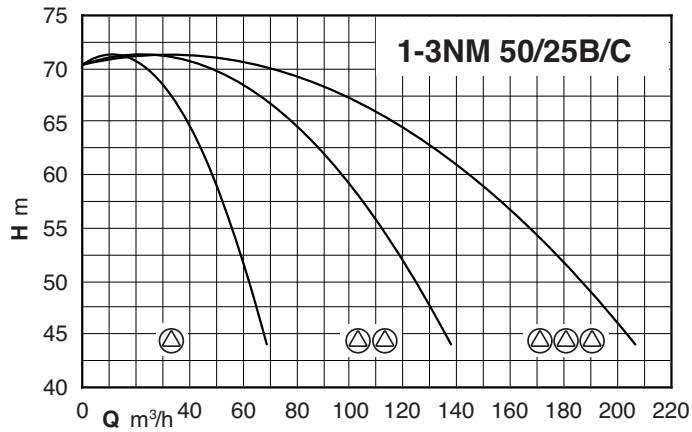

CALPEDA ROMANIA - INFINITY PUMPS SRL
Tel: 0268.33.47.47 / 0722.244.944
vanzari@calpeda.ro | www.calpeda.ro

BS. NM

Pressure boosting sets with 1 to 3 Centrifugal Pumps
Fixed speed pump or Variable speed pump (frequency converter)

Coverage chart

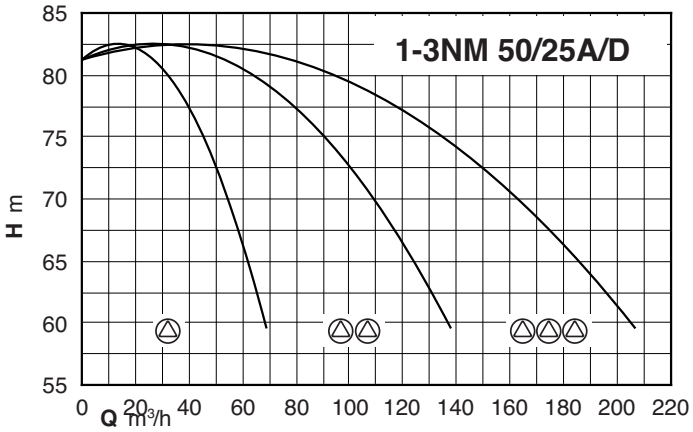

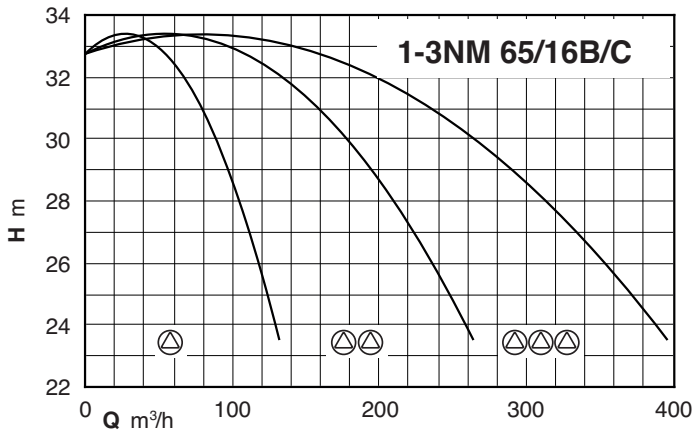

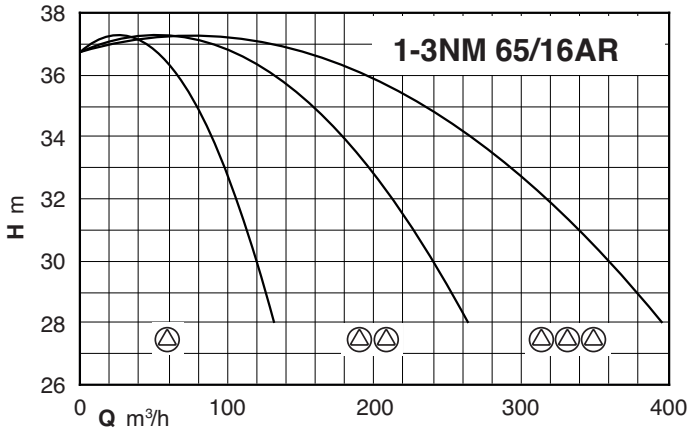

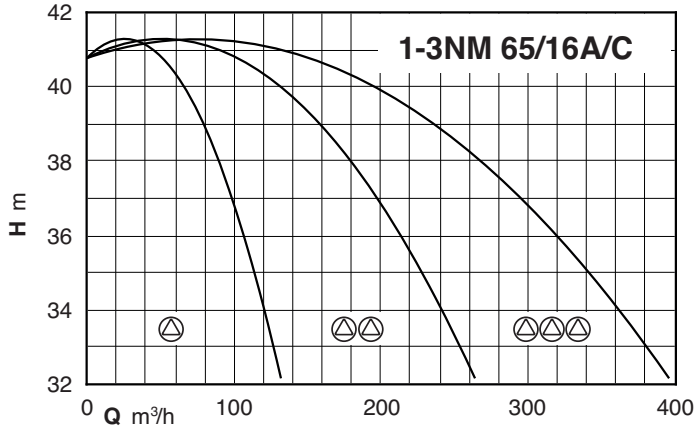

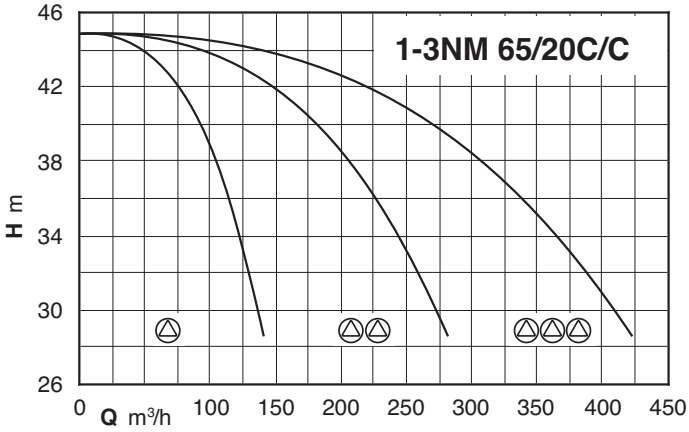

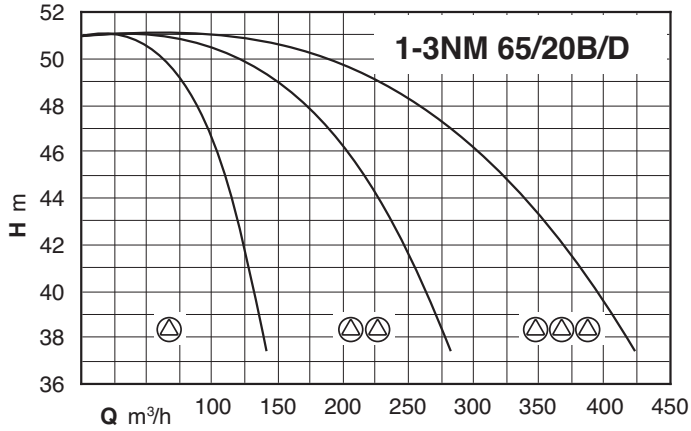

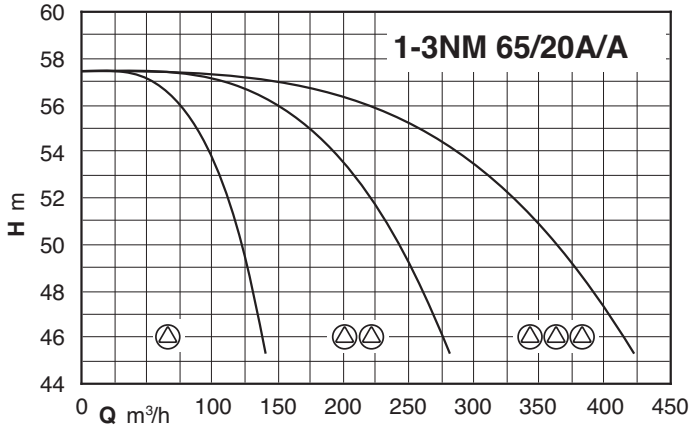

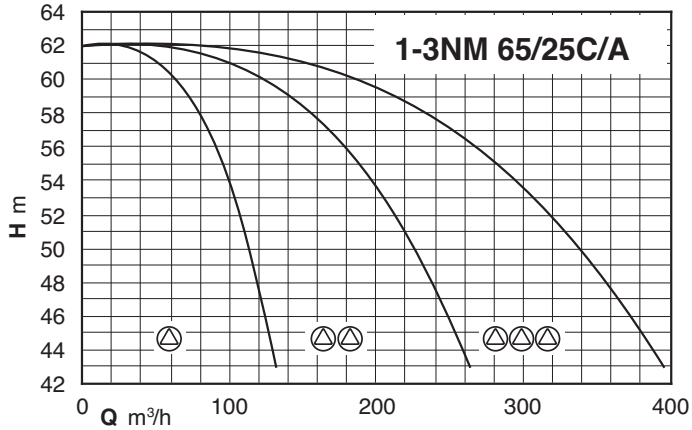

CALPEDA ROMANIA - INFINITY PUMPS SRL
Tel: 0268.33.47.47 / 0722.244.944
vanzari@calpeda.ro | www.calpeda.ro

BS. NM

Pressure boosting sets with 1 to 3 Centrifugal Pumps
Fixed speed pump or Variable speed pump (frequency converter)

Coverage chart

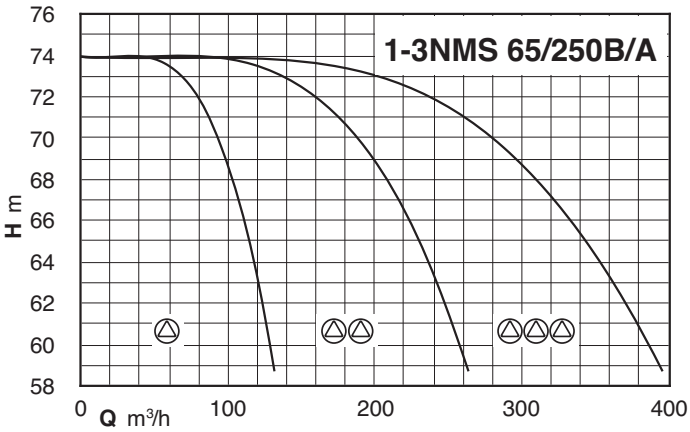

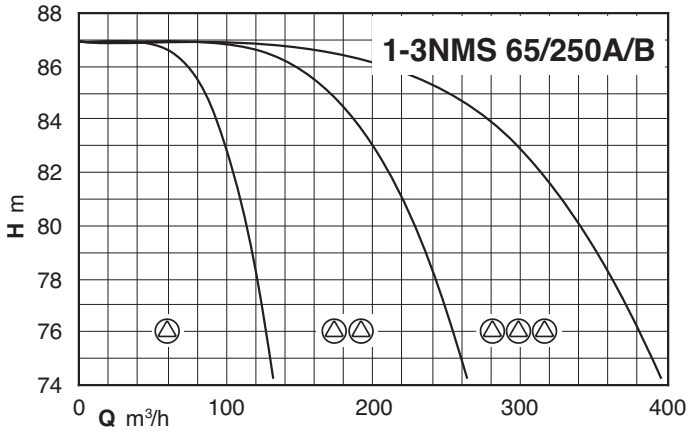

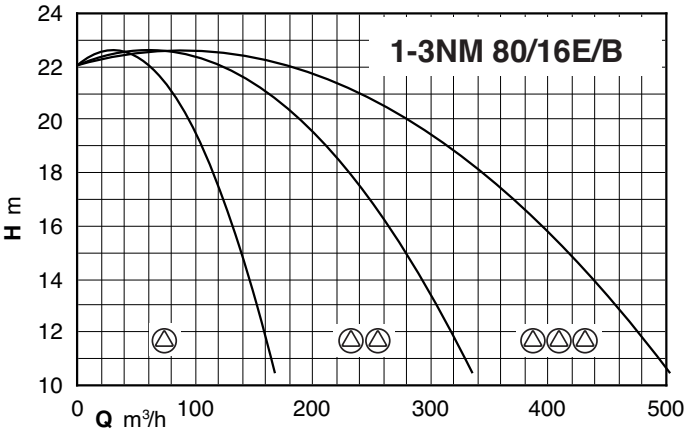

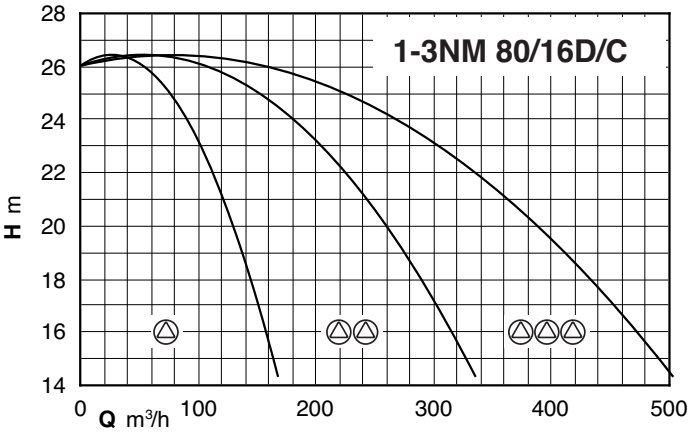

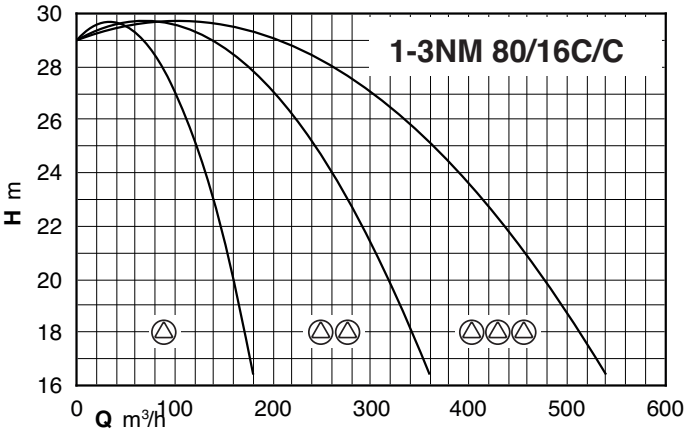

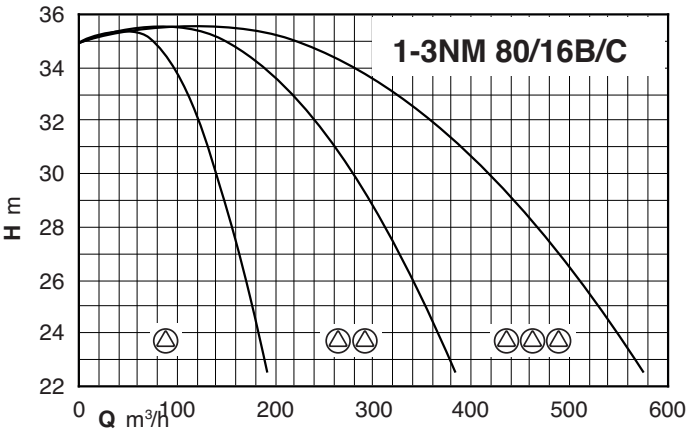

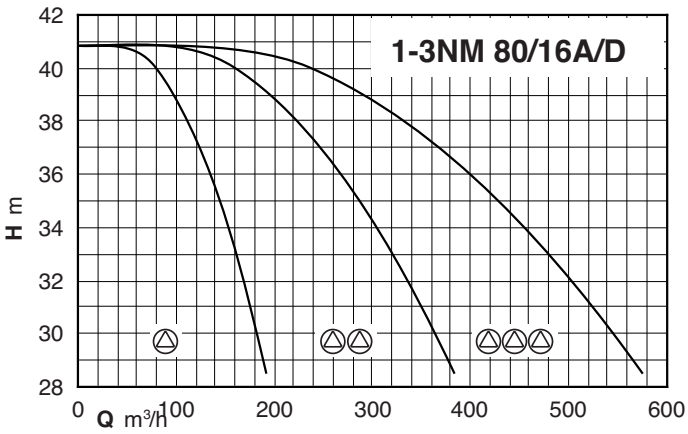

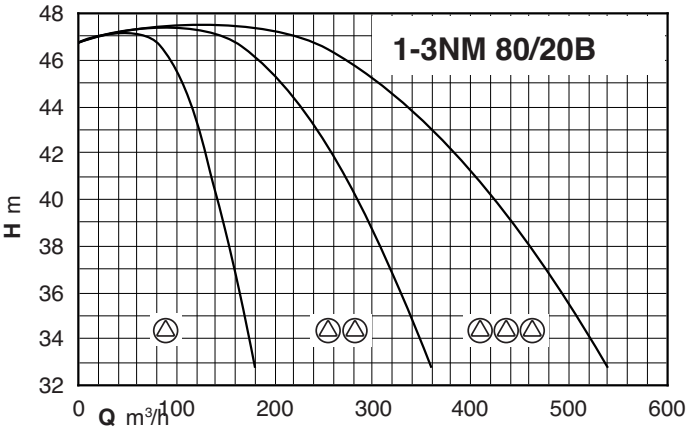

CALPEDA ROMANIA - INFINITY PUMPS SRL
Tel: 0268.33.47.47 / 0722.244.944
vanzari@calpeda.ro | www.calpeda.ro

BS. NM

Pressure boosting sets with 1 to 3 Centrifugal Pumps
Fixed speed pump or Variable speed pump (frequency converter)

Coverage chart

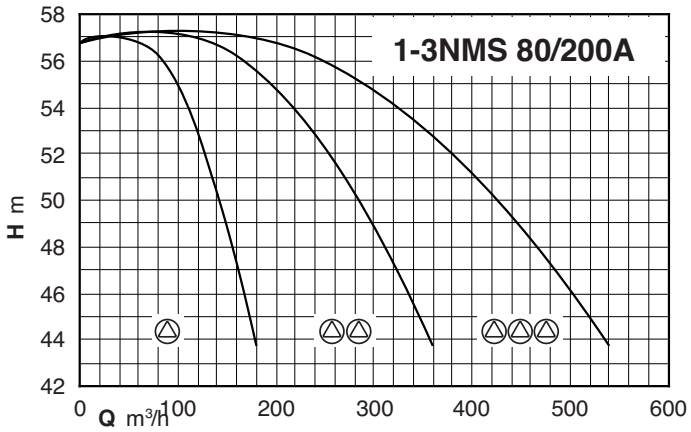

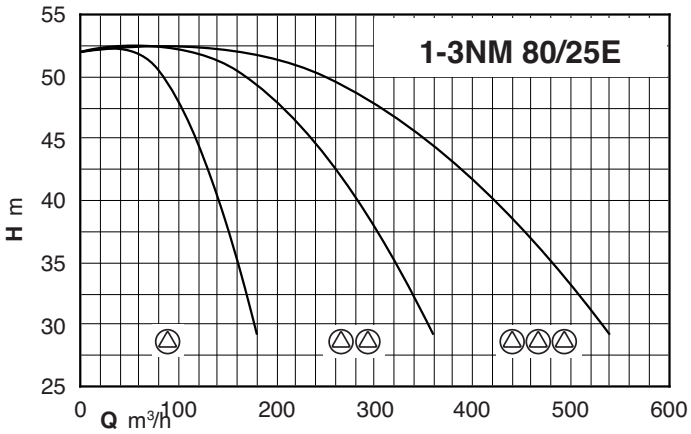

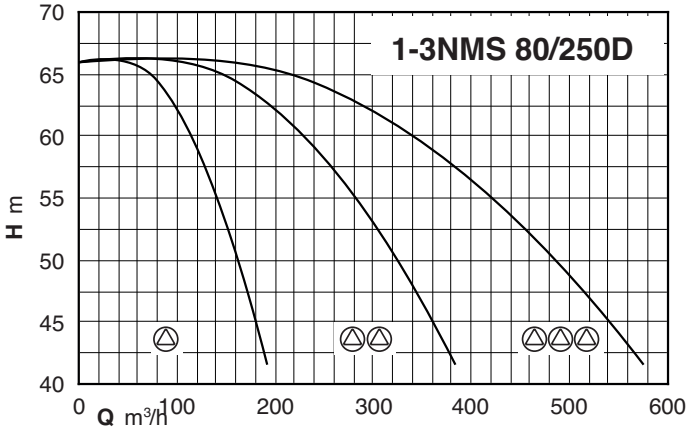

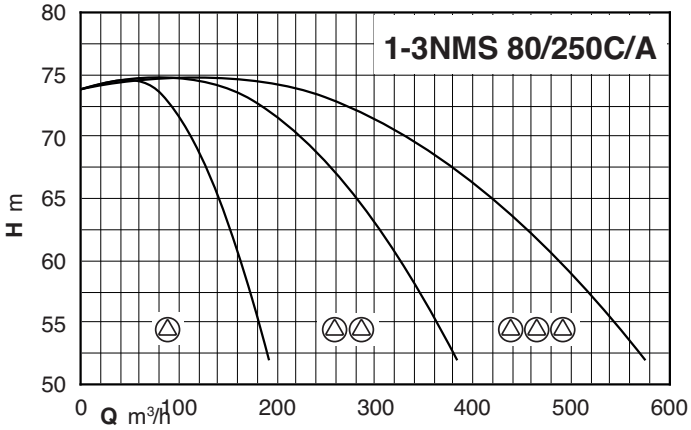

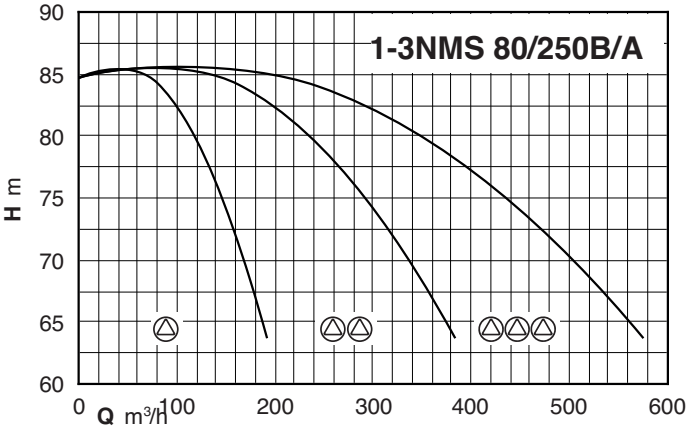

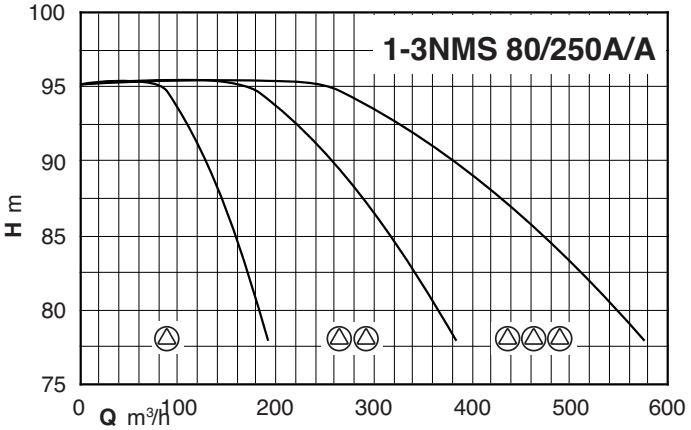

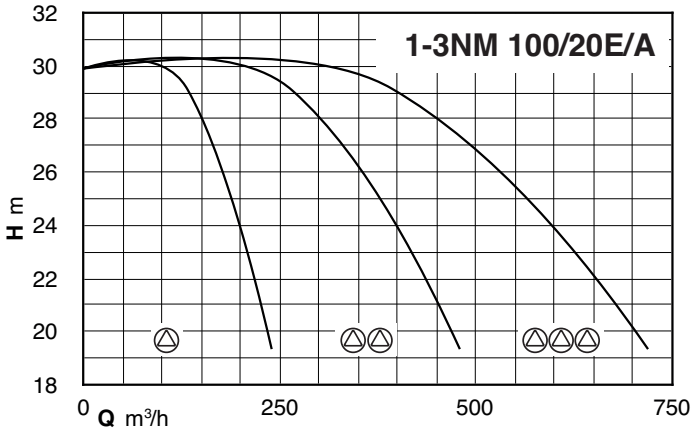

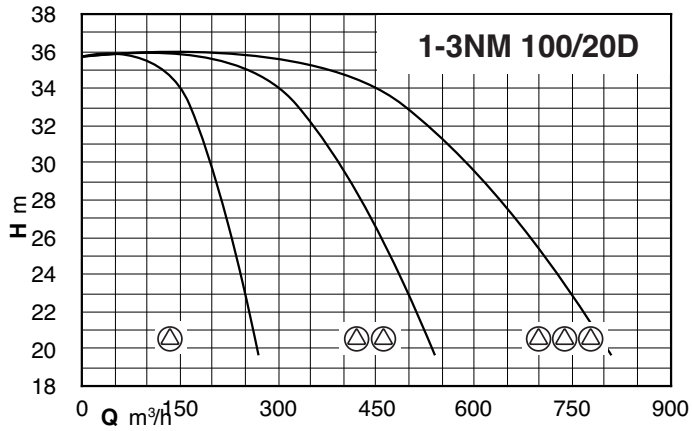

CALPEDA ROMANIA - INFINITY PUMPS SRL
Tel: 0268.33.47.47 / 0722.244.944
vanzari@calpeda.ro | www.calpeda.ro

BS. NM

Pressure boosting sets with 1 Centrifugal Pumps

Fixed speed pump

calpeda®

Performance

BS1F

Mains: 400V 3~ Motor: 400V 3~	Motor		Pres. switch 1 bar		Maximum capacity *		Vessel Membrane	Vessel
	kW	HP	min	max	**Q** l/min	**H** m	litre	litre
BS1F 1NM 32/16B/A	1,5	2	2,2	2,8	281	22	500	800
BS1F 1NM 32/16A/B	2,2	3	2,7	3,4	279	28	500	1000
BS1F 1NM 32/20C/A	3	4	3,2	4,2	285	33	500	1000
BS1F 1NM 32/20A/B	4	5,5	4,5	5,5	259	46	750	1000
BS1F 1NMD 32/210D/B	4	5,5	5	7	189	51	500	500
BS1F 1NMD 32/210C/A	5,5	7,5	6	8	242	61	500	800
BS1F 1NMD 32/210B/A	7,5	10	8	10	233	82	750	1000
BS1F 1NMD 32/210A/B	9,2	12,5	9,5	11	215	97	1000	1500
BS1F 1NMD 40/180D/B	4	5,5	4	5,5	314	41	500	1000
BS1F 1NMD 40/180C/A	5,5	7,5	5	6,5	351	51	750	1500
BS1F 1NMD 40/180B/A	7,5	10	6,7	8,2	356	68	1000	2000
BS1F 1NMD 40/180A/B	9,2	12,5	7,5	9	348	76	1500	2000
BS1F 1NM 40/16B/B	3	4	1,5	2,5	690	15	750	1500
BS1F 1NM 40/16A/C	4	5,5	2,4	3,4	735	24	1000	2000
BS1F 1NM 40/20B/A	5,5	7,5	3,7	4,7	566	38	1500	3000
BS1F 1NM 40/20A/A	7,5	10	4,4	5,4	645	45	2000	4000
BS1F 1NM 40/25B/C	11	15	5,6	6,6	667	57	3000	5000
BS1F 1NM 40/25A/C	15	20	7,7	8,7	686	78	4000	-
BS1F 1NM 50/16B/B	5,5	7,5	1,7	2,7	1171	17	2000	4000
BS1F 1NM 50/16A/B	7,5	10	2,5	3,5	1212	25	3000	5000
BS1F 1NM 50/20B/C	9,2	12,5	3,5	4,5	1087	36	3000	5000
BS1F 1NM 50/20A/C	11	15	4,2	5,2	1143	43	4000	-
BS1F 1NM 50/25C/C	11	15	4,1	5,1	999	42	4000	-
BS1F 1NM 50/25B/C	15	20	5,6	6,6	993	57	4000	-
BS1F 1NM 50/25A/D	18,5	25	6,6	7,6	1175	67	5000	-
BS1F 1NM 65/16B/C	11	15	2,2	3,2	2223	22	4000	-
BS1F 1NM 65/16AR	15	20	2,6	3,6	2238	27	5000	-
BS1F 1NM 65/16A/C	15	20	3,1	4,1	2205	32	5000	-
BS1F 1NM 65/20C/C	15	20	3	4	2101	31	-	-
BS1F 1NM 65/20B/D	18,5	25	3,6	4,6	2195	37	-	-
BS1F 1NM 65/20A/A	22	30	4,2	5,2	2238	43	-	-
BS1F 1NM 65/25C/A	22	30	5	6	1783	51	-	-
BS1F 1NMS 65/250B/A	30	40	6,6	7,6	1812	67	-	-
BS1F 1NMS 65/250A/A	37	50	7,7	8,7	1800	78	-	-
BS1F 1NM 80/16B/C	15	20	2,5	3,5	3391	25	-	-
BS1F 1NM 80/16A/D	18,5	25	2	3	2105	20	-	-
BS1F 1NM 80/20B	22	30	3,3	4,3	3040	34	-	-
BS1F 1NMS 80/200A	30	40	4,3	5,3	3005	44	-	-
BS1F 1NM 80/25E	22	30	3,8	4,8	2465	39	-	-
BS1F 1NMS 80/250D	30	40	4,5	6	2988	46	-	-
BS1F 1NMS 80/250C/A	37	50	5,5	7	3091	56	-	-
BS1F 1NMS 80/250B/A	45	60	6,5	8	3150	66	-	-
BS1F 1NMS 80/250A/A	55	75	8	9	3094	82	-	

* Maximum pumps flow at minimum setting pressure switch.

CALPEDA ROMANIA - INFINITY PUMPS SRL
Tel: 0268.33.47.47 / 0722.244.944
vanzari@calpeda.ro | www.calpeda.ro

BS. NM

Pressure boosting sets with 2 Centrifugal Pumps

Fixed speed pump

calpeda

Performance

BS2F

Mains: 400V 3~ Motor: 400V 3~	Motor		Pres. switch 1 bar		Pres. switch 2 bar		Maximum capacity *		Vessel Membrane	Vessel
	kW	HP	min	max	min	max	**Q** l/min	**H** m	litre	litre
BS2F 2NMD 20/110B/A	0,45 x2	0,6 x2	2,0	3,0	1,7	2,7	120	17	24x2	100
BS2F 2NMD 20/110A/B	0,75 x2	1 x2	2,8	4,0	2,4	3,6	130	24	60	100
BS2F 2NM 2/A/B	0,75 x2	1 x2	2,0	3,0	1,7	2,7	200	17	80	200
BS2F 2NMD 20/140B/A	1,1 x2	1,5 x2	3,4	4,9	3,2	4,7	160	33	80	200
BSM2F 2NMDM 20/140AE	1,5 x2	2 x2	4,0	5,3	3,7	5,0	160	38	100	200
BS2F 2NMD 20/140A/A	1,5 x2	2 x2	5,0	6,3	4,7	6,0	180	48	100	200
BS2F 2NM 3/C/A	1,1 x2	1,5 x2	2,5	3,5	2,2	3,2	200	22	100	200
BSM2F 2NMM 3/BE	1,5 x2	2 x2	3,0	4,0	2,7	3,7	200	28	100	300
BS2F 2NM 3/B/A	1,5 x2	2 x2	3,2	4,5	2,9	4,2	270	30	100	300
BS2F 2NM 3/A/B	2,2 x2	3 x2	4,0	5,3	3,7	5,0	280	38	200	300
BS2F 2NM 25/20B/C	2,2 x2	3 x2	3,0	4,0	2,7	3,7	530	28	300	500
BS2F 2NM 25/20A/B	3 x2	4 x2	3,8	4,8	3,5	4,5	600	36	500	800
BS2F 2NM 25/20S/C	4 x2	5,5 x2	4,0	5,5	3,5	5,0	670	36	500	800
BS2F 2NMD 25/190C/B	2,2 x2	3 x2	4,3	5,8	3,8	5,3	280	39	200	300
BS2F 2NMD 25/190B/A	3 x2	4 x2	5,0	7,0	4,5	6,5	320	46	200	300
BS2F 2NMD 25/190A/B	4 x2	5,5 x2	7,5	9,0	7,0	8,5	320	71	300	500
BS2F 2NM 32/16B/A	1,5 x2	2 x2	2,2	2,8	2	2,6	580	20	500	800
BS2F 2NM 32/16A/B	2,2 x2	3 x2	2,7	3,4	2,5	3,2	483	25	500	1000
BS2F 2NM 32/20C/A	3 x2	4 x2	3,2	4,2	3	4	546	31	500	1000
BS2F 2NM 32/20A/B	4 x2	5,5 x2	4,5	5,5	4	5	254	41	750	1000
BS2F 2NMD 32/210D/B	4 x2	5,5 x2	5	7	4,5	6,5	408	46	500	500
BS2F 2NMD 32/210C/A	5,5 x2	7,5 x2	6	8	5,5	7,5	500	56	500	800
BS2F 2NMD 32/210B/A	7,5 x2	10 x2	8	10	7,5	9,5	498	76	750	1000
BS2F 2NMD 32/210A/B	9,2 x2	12,5 x2	9,5	11	9	10,5	484	92	1000	1500
BS2F 2NMD 40/180D/B	4 x2	5,5 x2	4	5,5	3,5	5	697	36	500	1000
BS2F 2NMD 40/180C/A	5,5 x2	7,5 x2	5	6,5	4,5	6	764	46	750	1500
BS2F 2NMD 40/180B/A	7,5 x2	10 x2	6,7	8,2	6,2	7,7	772	63	1000	2000
BS2F 2NMD 40/180A/B	9,2 x2	12,5 x2	7,5	9	7	8,5	764	71	1500	2000
BS2F 2NM 40/16B/B	3 x2	4 x2	1,5	2,5	1,2	2,2	1410	12	750	1500
BS2F 2NM 40/16A/C	4 x2	5,5 x2	2,4	3,4	2	3	1583	20	1000	2000
BS2F 2NM 40/20B/A	5,5 x2	7,5 x2	3,7	4,7	3,3	4,3	1227	34	1500	3000
BS2F 2NM 40/20A/A	7,5 x2	10 x2	4,4	5,4	3,9	4,9	1403	40	2000	4000
BS2F 2NM 40/25B/C	11 x2	15 x2	5,6	6,6	5,1	6,1	1452	52	3000	5000
BS2F 2NM 40/25A/C	15 x2	20 x2	7,7	8,7	7,3	8,3	1446	74	4000	-
BS2F 2NM 50/16B/B	5,5 x2	7,5 x2	1,7	2,7	1,2	2,2	2609	12	2000	4000
BS2F 2NM 50/16A/B	7,5 x2	10 x2	2,5	3,5	2	3	2665	20	3000	5000
BS2F 2NM 50/20B/C	9,2 x2	12,5 x2	3,5	4,5	3	4	2466	31	3000	5000
BS2F 2NM 50/20A/C	11 x2	15 x2	4,2	5,2	3,7	4,7	2549	38	4000	-
BS2F 2NM 50/25C/C	11 x2	15 x2	4,1	5,1	3,6	4,6	2236	37	4000	-
BS2F 2NM 50/25B/C	15 x2	20 x2	5,6	6,6	5,1	6,1	2236	52	4000	-
BS2F 2NM 50/25A/D	18,5 x2	25 x2	6,6	7,6	6,1	7,1	2426	62	5000	-
BS2F 2NM 65/16B/C	11 x2	15 x2	2,2	3,2	1,7	2,7	4254	17	4000	-
BS2F 2NM 65/16AR	15 x2	15 x2	2,6	3,6	2,1	3,1	4111	21	5000	
BS2F 2NM 65/16A/C	15 x2	15 x2	3,1	4,1	2,6	3,6	4228	27	5000	--
BS2F 2NM 65/20C/C	15 x2	20 x2	3	4	2,5	3,5	4422	25	-	-
BS2F 2NM 65/20B/D	18,5 x2	25 x2	3,6	4,6	3,2	4,2	4283	33	-	-
BS2F 2NM 65/20A/A	22 x2	30 x2	4,2	5,2	3,8	4,8	4044	39	-	-
BS2F 2NM 65/25C/A	22 x2	30 x2	5	6	4,6	5,6	3608	47	-	-
BS2F 2NMS 65/250B/A	30 x2	40 x2	6,6	7,6	6,2	7,2	2970	63	-	-
BS2F 2NMS 65/250A/A	37 x2	50 x2	7,7	8,7	7,3	8,3	2994	74	-	-
BS2F 2NM 80/16B/C	15 x2	20 x2	2,2	3,2	1,7	2,7	6712	20	-	-
BS2F 2NM 80/16A/D	18,5 x2	25 x2	2,8	3,8	2,3	3,3	6593	23	-	-
BS2F 2NM 80/20B	22 x2	30 x2	3,3	4,3	3	4	5836	31	-	-
BS2F 2NMS 80/200A	30 x2	40 x2	4,3	5,3	4	5	5818	41	-	-
BS2F 2NM 80/25E	22 x2	30 x2	3,8	4,8	3,2	4,2	5691	33	-	-
BS2F 2NMS 80/250D	30 x2	40 x2	4,5	6	4	5,5	6416	41	-	-
BS2F 2NMS 80/250C/A	37 x2	50 x2	5,5	7	5	6,5	6407	51	-	-
BS2F 2NMS 80/250B/A	45 x2	60 x2	6,5	8	6	7,5	6376	61	-	-
BS2F 2NMS 80/250A/A	55 x2	75 x2	8	9	7,5	8,5	6400	76	-	-

* Maximum pumps flow at minimum setting pressure of 2 nd pressure switch.

CALPEDA ROMANIA - INFINITY PUMPS SRL
Tel: 0268.33.47.47 / 0722.244.944
vanzari@calpeda.ro | www.calpeda.ro

BS. NM

Pressure boosting sets with 3 Centrifugal Pumps

Fixed speed pump

Performance

BS3F

Mains: 400V 3~ Motor: 400V 3~	Motor		Pres. switch 1 bar		Pres. switch 2 bar		Pres. switch 3 bar		Maximum capacity *		Vessel Membrane litre	Vessel litre
	kW	HP	min	max	min	max	min	max	**Q** l/min	**H** m		
BS3F 3NM 40/16B/B	3 x3	4 x3	2	2,6	1,6	2,2	1,2	1,8	2115	12	750	1500
BS3F 3NM 40/16A/C	4 x3	5,5 x3	2,7	3,4	2,3	3	1,9	2,6	2393	19	1000	2000
BS3F 3NM 40/20B/A	5,5 x3	7,5 x3	3,9	4,7	3,5	4,3	3,1	3,9	1879	32	1500	3000
BS3F 3NM 40/20A/A	7,5 x3	10 x3	4,4	5,4	4	5	3,6	4,6	2120	37	2000	4000
BS3F 3NM 40/25B/C	11 x3	15 x3	5,6	6,6	5,2	6,2	4,8	5,8	2189	49	3000	5000
BS3F 3NM 40/25A/C	15 x3	20 x3	7,9	8,7	7,5	8,3	7,1	7,9	2155	72	4000	-
BS3F 3NM 50/16B/B	5,5 x3	7,5 x3	1,9	2,7	1,5	2,3	1,1	1,9	3971	11	2000	4000
BS3F 3NM 50/16A/B	7,5 x3	10 x3	2,7	3,5	2,3	3,1	1,9	2,7	4039	19	3000	5000
BS3F 3NM 50/20B/C	9,2 x3	12,5 x3	3,5	4,5	3	4	2,5	3,5	3894	25	3000	5000
BS3F 3NM 50/20A/C	11 x3	15 x3	4,2	5,2	3,7	4,7	3,2	4,2	3903	33	4000	-
BS3F 3NM 50/25C/C	11 x3	15 x3	4,1	5,1	3,6	4,6	3,1	4,1	3524	32	4000	-
BS3F 3NM 50/25B/C	15 x3	20 x3	5,6	6,6	5,1	6,1	4,6	5,6	3497	47	4000	-
BS3F 3NM 50/25A/D	18,5 x3	25 x3	6,7	7,7	6,3	7,3	5,9	6,9	3563	60	5000	-
BS3F 3NM 65/16B/C	11 x3	15 x3	2,2	3,2	1,9	2,9	1,6	2,6	6128	16	4000	-
BS3F 3NM 65/16AR	15 x3	20 x3	2,6	3,6	2,3	3,3	2	3	5831	20	5000	-
BS3F 3NM 65/16A/C	15 x3	20 x3	3,1	4,1	2,8	3,8	2,5	3,5	6053	25	5000	-
BS3F 3NM 65/20C/C	15 x3	20 x3	3	4	2,7	3,7	2,4	3,4	6622	24	-	-
BS3F 3NM 65/20B/D	18,5 x3	25 x3	3,6	4,6	3,3	4,3	3	4	6090	31	-	-
BS3F 3NM 65/20A/A	22 x3	30 x3	4,2	5,2	3,9	4,9	3,6	4,6	5410	37	-	-
BS3F 3NM 65/25C/A	22 x3	30 x3	5	6	4,7	5,7	4,4	5,4	5290	45	-	-
BS3F 3NMS 65/250B/A	30 x3	40 x3	6,6	7,6	6,3	7,3	6	7	3590	61	-	-
BS3F 3NMS 65/250A/A	37 x3	50 x3	7,7	8,7	7,4	8,4	7,1	8,1	3651	72	-	-
BS3F 3NM 80/16B/C	15 x3	20 x3	2,2	3,2	1,9	2,9	1,6	2,6	7854	16	-	-
BS3F 3NM 80/16A/C	18,5 x3	25 x3	2,8	3,8	2,5	3,5	2,2	3,2	8027	22	-	-
BS3F 3NM 80/20B	22 x3	30 x3	3,3	4,3	3,1	4,1	2,9	3,9	8491	30	-	-
BS3F 3NMS 80/200A	30 x3	40 x3	4,3	5,3	4,1	5,1	3,9	4,9	8488	40	-	-
BS3F 3NM 80/25E	22 x3	30 x3	3,8	4,8	3,4	4,4	3	4	8818	31	-	-
BS3F 3NMS 80/250D	30 x3	40 x3	5	6	4,5	5,5	4	5	9625	41	-	-
BS3F 3NMS 80/250C/A	37 x3	50 x3	6	7	5,5	6,5	5	6	9610	51	-	-
BS3F 3NMS 80/250B/A	45 x3	60 x3	7	8	6,5	7,5	6	7	9564	61	-	-
BS3F 3NMS 80/250A/A	55 x3	75 x3	8	9	7,6	8,6	7,2	8,2	9323	73	-	-

* Maximum pumps flow at minimum setting pressure of 3 nd pressure switch.

CALPEDA ROMANIA - INFINITY PUMPS SRL
Tel: 0268.33.47.47 / 0722.244.944
vanzari@calpeda.ro | www.calpeda.ro

BS. NM

Pressure boosting sets with 1 to 3 Centrifugal Pumps
Fixed speed pump or Variable speed pump (frequency converter)

Performance

BS..

PUMPS Nos						PUMP TYPE	P_2 For each pump	
1	2	3	4	5	6		kW	HP
	BS2V BS1V1F					NM 2/A/B	0,75	1
						NMD 20/110B/A	0,45	0,6
						NMD 20/110A/B	0,75	1
						NMD 20/140B/A	1,1	1,5
						NMD 20/140A/A	1,5	2
						NM 3/C/A	1,1	1,5
						NM 3/B/A	1,5	2
						NM 3/A/B	2,2	3
						NM 25/20B/C	2,2	3
						NM 25/20A/B	3	4
						NM 25/20S/C	4	5,5
						NMD 25/190C/B	2,2	3
						NMD 25/190B/A	3	4
						NMD 25/190A/B	4	5,5
BS1V	BS2V BS1V1F	BS3V BS1V2F	BS4V BS1V3F	BS5V BS1V4F	BS6V BS1V5F	NM 32/16B/A	1,5	2
						NM 32/16A/B	2,2	3
						NM 32/20C/A	3	4
						NM 32/20A/B	4	5,5
						NMD 32/210D/B	4	5,5
						NMD 32/210C/A	5,5	7,5
						NMD 32/210B/A	7,5	10
						NMD 32/210A/B	9,2	12,5
						NMD 40/180D/B	4	5,5
						NMD 40/180C/A	5,5	7,5
						NMD 40/180B/A	7,5	10
						NMD 40/180A/B	9,2	12,5
						NM 40/16B/B	3	4
						NM 40/16A/C	4	5,5
						NM 40/20B/A	5,5	7,5
						NM 40/20A/A	7,5	10
						NM 40/25B/C	11	15
						NM 40/25A/C	15	20
						NM 50/16B/B	5,5	7,5
						NM 50/16A/B	7,5	10
						NM 50/20B/C	9,2	12,5
						NM 50/20A/C	11	15
						NM 50/25C/C	11	15
						NM 50/25B/C	15	20
						NM 50/25A/D	18,5	25
						NM 65/16B/C	11	15
						NM 65/16AR	15	20
						NM 65/16A/C	15	20
						NM 65/20C/C	15	20
						NM 65/20B/D	18,5	25
						NM 65/20A/A	22	30
						NM 65/25C/A	22	30
						NMS 65/250B/A	30	40
						NMS 65/250A/A	37	50
						NM 80/16B/C	15	20
						NM 80/16A/D	18,5	25
						NM 80/20B	22	30
						NMS 80/200A	30	40
						NM 80/25E	22	30
						NMS 80/250D	30	40
						NMS 80/250C/A	37	50
						NMS 80/250B/A	45	60
						NMS 80/250A /A	55	75

BS.. ..-ITT

PUMPS Nos		PUMP TYPE	P_2 For each pump	
2	3		kW	HP
BS2V -ITT	BS3V -ITT	NM 3/C/A-ITT	1,1	1,5
		NM 3/B/A-ITT	1,5	2
		NM 3/A/B-ITT	2,2	3
		NM 25/160B/A-ITT	1,1	1,5
		NM 25/160A/A-ITT	1,5	2
		NM 25/20B/C-ITT	2,2	3
		NM 25/20A/B-ITT	3	4
		NM 25/20S/C-ITT	4	5,5
		NM 32/16B/A-ITT	1,5	2
		NM 32/16A/B-ITT	2,2	3
		NM 32/20D/B-ITT	2,2	3
		NM 32/20C/A-ITT	3	4
		NM 32/20A/B-ITT	4	5,5
		NM 40/16C/C-ITT	2,2	3
		NM 40/16B/B-ITT	3	4
		NM 40/16A/C-ITT	4	5,5
		NM 40/20D/B-ITT	4	5,5
		NM 40/20C/B-ITT	4	5,5
		NM 40/20B/A-ITT	5,5	7,5
		NM 40/20AR/A-ITT	5,5	7,5
		NM 40/20A/A-ITT	7,5	10
		NM 40/25C/C-ITT	9,2	12,5
		NM 40/25B/C-ITT	11	15
		NM 40/25A/C-ITT	15	20
		NM 50/16B/B-ITT	5,5	7,5
		NM 50/16A/B-ITT	7,5	10
		NM 50/20B/C-ITT	9,2	12,5
		NM 50/20A/C-ITT	11	15
		NM 50/20S/C-ITT	15	20
		NM 50/25C/C-ITT	11	15
		NM 50/25B/C-ITT	15	20
		NM 50/25A/D-ITT	18,5	25
		NM 65/16D/B-ITT	7,5	10
		NM 65/16C/C-ITT	9,2	12,5
		NM 65/16B/C-ITT	11	15
		NM 65/16AR-ITT	15	20
		NM 65/16A/C-ITT	15	20
		NM 65/20C/C-ITT	15	20
		NM 65/20B/D-ITT	18,5	25
		NM 65/20A/A-ITT	22	30
		NM 65/25C/A-ITT	22	30
		NM 80/16E/B-ITT	7,5	10
		NM 80/16D/C-ITT	9,2	12,5
		NM 80/16C/C-ITT	11	15
		NM 80/16B/C-ITT	15	20
		NM 80/16A/D-ITT	18,5	25
		NM 80/20B-ITT	22	30
		NM 80/25E-ITT	22	30
		NM 100/20E/A-ITT	18,5	25
		NM 100/20D-ITT	22	30

CALPEDA ROMANIA - INFINITY PUMPS SRL
Tel: 0268.33.47.47 / 0722.244.944
vanzari@calpeda.ro | www.calpeda.ro

BS. NM

Pressure boosting sets with 1 to 3 Centrifugal Pumps
Fixed speed pump or Variable speed pump (frequency converter)

Dimensions and weights

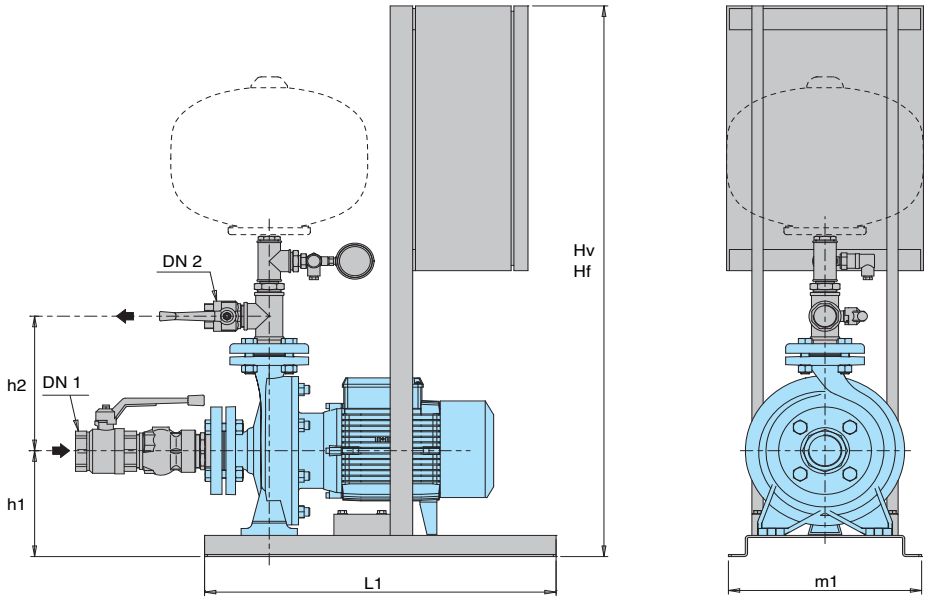

TYPE	Connection		mm					weight
	DN 1	DN 2	Hv	Hf	h1	L1	m1	kg
BS1.. 1NM 32/16B/A BS1.. 1NM 32/16A/B	G 2	G 1	1045	875	175	625	365	-
BS1.. 1NM 32/20C/A BS1.. 1NM 32/20A/B	G 2	G 1	1045	875	205	625	365	-
BS1.. 1NMD 32/210D/B BS1.. 1NMD 32/210C/A BS1.. 1NMD 32/210B/A BS1.. 1NMD 32/210A/B	G 2	G 1 1/4	1045	875	135 155 155 175	625	365	-
BS1.. 1NMD 40/180D/B BS1.. 1NMD 40/180C/A BS1.. 1NMD 40/180B/A BS1.. 1NMD 40/180A/B	G 2	G 1 1/2	1045	875	135 155 155 175	625	365	-
BS1.. 1NM 40/16B/B BS1.. 1NM 40/16A/C	G 2 1/2	G 1 1/2	1045	875	175	625	365	-
BS1.. 1NM 40/20B/A BS1.. 1NM 40/20A/A	G 2 1/2	G 1 1/2	1145	875 1145	205	625	365	-
BS1.. 1NM 40/25B/C BS1.. 1NM 40/25A/C	G 2 1/2	G 1 1/2	-	-	-	-	-	-
BS1.. 1NM 50/16B/B BS1.. 1NM 50/16A/B	G 2 1/2	G 2	-	-	-	-	-	-
BS1.. 1NM 50/20B/C BS1.. 1NM 50/20A/C	G 2 1/2	G 2	-	-	-	-	-	-
BS1.. 1NM 50/25C/D BS1.. 1NM 50/25B/C BS1.. 1NM 50/25A/C	G 2 1/2	G 2	-	-	-	-	-	-
BS1.. 1NM 65/16B/C BS1.. 1NM 65/16AR BS1.. 1NM 65/16A/C	G 3	G 2 1/2	-	-	-	-	-	-
BS1.. 1NM 65/20C/C BS1.. 1NM 65/20B/C BS1.. 1NM 65/20A/A	G 3	G 2 1/2	-	-	-	-	-	-
BS1.. 1NM 65/25C/A BS1.. 1NMS 65/250B/A BS1.. 1NMS 65/250A/A	G 3	G 2 1/2	-	-	-	-	-	-
BS1.. 1NM 80/16B/C BS1.. 1NM 80/16A/B	100	80	-	-	-	-	-	-
BS1.. 1NM 80/20B BS1.. 1NMS 80/200A	100	80	-	-	-	-	-	-
BS1.. 1NM 80/25E BS1.. 1NMS 80/250D BS1.. 1NMS 80/250C/A BS1.. 1NMS 80/250B/A BS1.. 1NMS 80/250A/A	100	80	-	-	-	-	-	-

Dimensions not binding to be verified when ordering

* Cabinet version

CALPEDA ROMANIA - INFINITY PUMPS SRL
Tel: 0268.33.47.47 / 0722.244.944
vanzari@calpeda.ro | www.calpeda.ro

BS. NM

Pressure boosting sets with 1 to 3 Centrifugal Pumps
Fixed speed pump or Variable speed pump (frequency converter)

Dimensions and weights

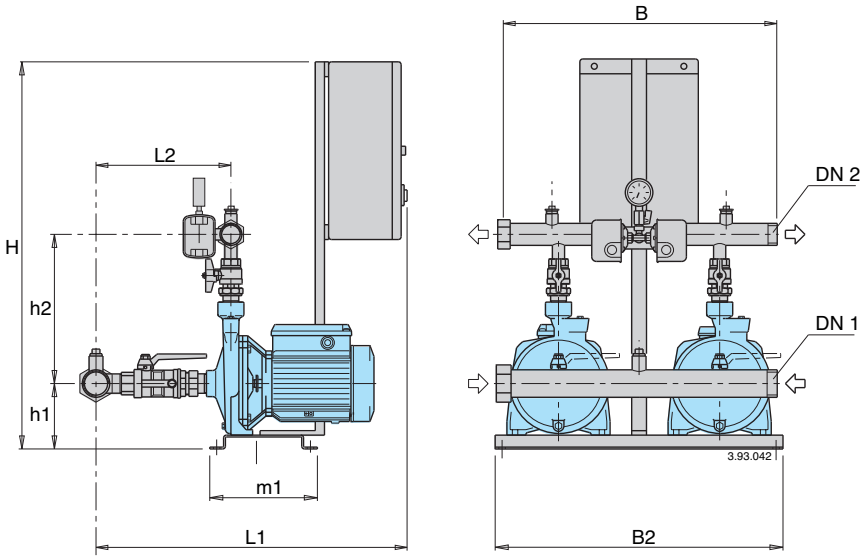

TYPE	Connection		mm									weight
	DN 1	DN 2	Hf	Hv	h1	h2	L1	L2	m1	B	B2	kg
BS.. 2NMD 20/110B/A	G 2	G 1 1/2	840		129	277	670	315	235	625	600	51
BS.. 2NMD 20/110A/B					129	277	670	315				55
BS.. 2NM 2/A/B					129	295	620	262				54
BS.. 2NMD 20/140B/A	G 2	G 1 1/2	840		146	295	670	320	235	625	600	72
BS.. 2NMD 20/140A/A					146	295	670	320				77
BS.. 2NM 3/C/A	G 2	G 1 1/2	840		146	325	650	267	235	625	600	71
BS.. 2NM 3/B/A					146	325	650	267				76
BS.. 2NM 3/A/B					146	325	650	267				78
BS.. 2NM 25/20B/C	G 21/2	G 2	840		160	330	725	373	235	625	600	87
BS.. 2NM 25/20A/B					160	330	725	373				106
BS.. 2NM 25/20S/C					160	330	725	373				114
BS.. 2NMD 25/190C/B	G 21/2	G2	840		175	330	760	407	235	625	600	108
BS.. 2NMD 25/190B/A					175	330	760	407				123
BS.. 2NMD 25/190A/B					175	330	760	407				132
BS.. 2NM 32/16B/A	G 3	G 21/2	830	1210	165	345	385	330	235	600	625	
BS.. 2NM 32/16A/B			830	1210	165			370				
BS.. 2NM 32/20C/A	G 3	G 21/2	830	1210	195	365	385	395	235	600	625	
BS.. 2NM 32/20A/B			830	1210	195			395				
BS.. 2NMD 32/210D/B	G 3	G 21/2	890	1270	245	380	460	420	550	700	800	
BS.. 2NMD 32/210C/A			890	1370	272			440				
BS.. 2NMD 32/210B/A			1370	1370	272			440				
BS.. 2NMD 32/210A/B			1370	1670	307			515				
BS.. 2NMD 40/180D/B	G 3	G 21/2	890	1270	245	460	475	415	550	700	800	
BS.. 2NMD 40/180C/A			890	1370	272			435				
BS.. 2NMD 40/180B/A			1370	1370	272			435				
BS.. 2NMD 40/180A/B			1370	1670	307			510				

Dimensions not binding to be verified when ordering

CALPEDA ROMANIA - INFINITY PUMPS SRL
Tel: 0268.33.47.47 / 0722.244.944
vanzari@calpeda.ro | www.calpeda.ro

BS. NM

Pressure boosting sets with 1 to 3 Centrifugal Pumps
Fixed speed pump or Variable speed pump (frequency converter)

Dimensions and weights

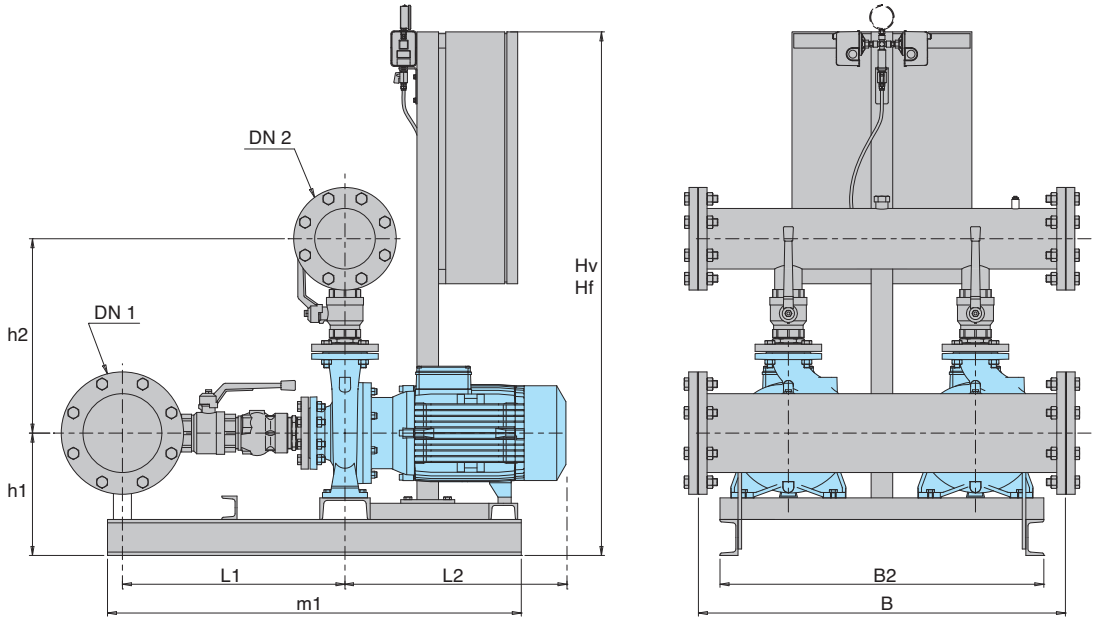

TYPE	Connection		mm									weight
	DN 1	DN 2	Hf	Hv	h1	h2	L1	L2	m1	B	B2	kg
BS.. 2NM 40/16B/B	100	80	830	1210	187	380	480	395	550	820	800	-
BS.. 2NM 40/16A/C			830	1210	187			395				
BS.. 2NM 40/20B/A	100	80	830	1310	215	400	500	425	550	820	800	-
BS.. 2NM 40/20A/A			1310	1310	215			425				
BS.. 2NM 40/25B/C	100	80	1455	1755	340	440	500	540	-	820	-	-
BS.. 2NM 40/25A/C			1455	1755	240			615				
BS.. 2NM 50/16B/B	125	100	975	1455	315	435	515	425	-	820	-	-
BS.. 2NM 50/16A/B			1455	1455	215			425				
BS.. 2NM 50/20B/C	125	100	1455	1755	315	455	515	540	-	820	-	-
BS.. 2NM 50/20A/C			1455	1755	215			540				
BS.. 2NM 50/25C/D	125	100	1455	1755	340	480	515	545	-	820	-	-
BS.. 2NM 50/25B/C			1455	1755	240			620				
BS.. 2NM 50/25A/D			1455	1855	240			620				
BS.. 2NM 65/16B/C	200	150	1455	1755	320	525	625	540	-	1020	-	-
BS.. 2NM 65/16AR			1455	1755	320			540				
BS.. 2NM 65/16A/C			1455	1755	220			615				
BS.. 2NM 65/20C/C	200	150	1455	1755	340	550	625	615	-	1020	-	-
BS.. 2NM 65/20B/C			1455	1855	240			615				
BS.. 2NM 65/20A/A			1655	1855	260			725				
BS.. 2NM 65/25C/A	200	150	1655	1855	360	575	625	725	-	1200	-	-
BS.. 2NMS 65/250B/A			1655	1855	260			725				
BS.. 2NMS 65/250A/A			1855	1600*	310			975				
BS.. 2NM 80/16B/C	250	200	1455	1755	340	615	730	620	-	1050	-	-
BS.. 2NM 80/16A/D			1455	1855	240			620				
BS.. 2NM 80/20B	250	200	1655	1855	360	640	730	725	-	1050	-	-
BS.. 2NMS 80/200A			1655	1855	260			725				
BS.. 2NM 80/25E	250	200	1655	1855	360	670	730	725	-	1200	-	-
BS.. 2NMS 80/250D			1655	1855	260			725				
BS.. 2NMS 80/250C/A			1855	1600*	310			975				
BS.. 2NMS 80/250B/A			1400*	2100*	310			1040				
BS.. 2NMS 80/250A/A			1400*	2100*	310			1110				

Dimensions not binding to be verified when ordering

* Cabinet version

CALPEDA ROMANIA - INFINITY PUMPS SRL
Tel: 0268.33.47.47 / 0722.244.944
vanzari@calpeda.ro | www.calpeda.ro

BS. NM

Pressure boosting sets with 1 to 3 Centrifugal Pumps
Fixed speed pump or Variable speed pump (frequency converter)

Dimensions and weights

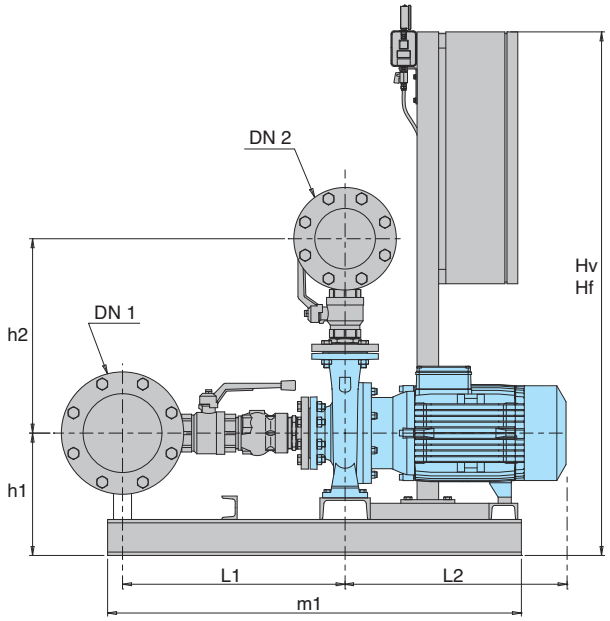

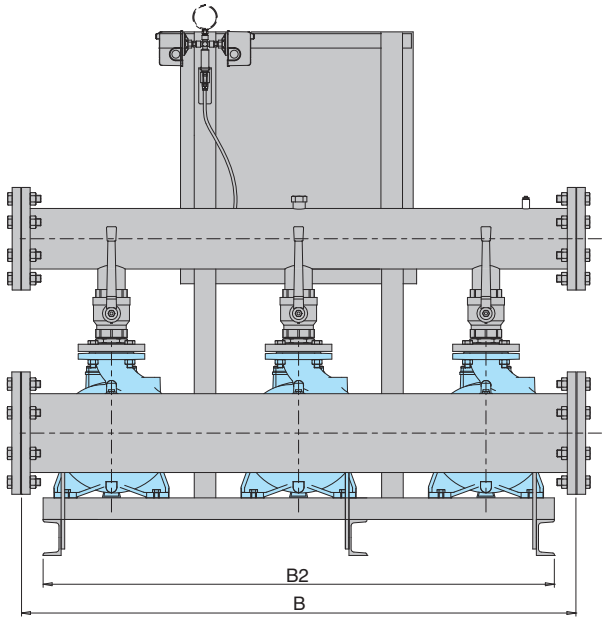

TYPE	Connection		mm									weight
	DN 1	DN 2	Hf	Hv	h1	h2	L1	L2	m1	B	B2	kg
BS.. 3NM 40/16B/B **BS.. 3NM 40/16A/C**	125	100	830 830	1310 1310	187 187	390	495	395 395	550	1340	800	-
BS.. 3NM 40/20B/A **BS.. 3NM 40/20A/A**	125	100	830 1410	1610 1610	215 215	410	515	425 425	550	1340	800	-
BS.. 3NM 40/25B/B **BS.. 3NM 40/25A/B**	125	100	1555 1555	1700* 1700*	340 240	450	515	540 615	-	1340	-	-
BS.. 3NM 50/16B/B **BS.. 3NM 50/16A/B**	150	125	975 1555	1755 1755	315 215	448	525	425 425	-	1340	-	-
BS.. 3NM 50/20B/C **BS.. 3NM 50/20A/C**	150	125	1555 1555	1700* 1700*	315 215	468	525	540 540	-	1340	-	-
BS.. 3NM 50/25C/D **BS.. 3NM 50/25B/C** **BS.. 3NM 50/25A/D**	150	125	1555 1555 1755	1700* 1700* 1700*	340 240 240	493	525	545 620 620	-	1540	-	-
BS.. 3NM 65/16B/C **BS.. 3NM 65/16AR** **BS.. 3NM 65/16A/C**	250	200	1555 1555 1555	1700* 1700* 1700*	320 320 220	555	650	540 540 615	-	1540	-	-
BS.. 3NM 65/20C/C **BS.. 3NM 65/20B/C** **BS.. 3NM 65/20A/A**	250	200	1555 1755 1855	1700* 1700* 1700*	340 240 260	580	650	615 615 725	-	1540	-	-
BS.. 3NM 65/25C/A **BS.. 3NMS 65/250B/A** **BS.. 3NMS 65/250A/A**	250	200	1855 1855 1545	1700* 1700* -	360 260 310	605	650	725 725 975	-	1900	-	-
BS.. 3NM 80/16B/C **BS.. 3NM 80/16A/D**	300 (1	250	1555 1755	1700* 1700*	340 240	645	755	620 620	-	1900	-	-
BS.. 3NM 80/20B **BS.. 3NMS 80/200A**	300 (1	250	1855 1855	1700* 1700*	360 260	670	755	725 725	-	1900	-	-
BS.. 3NM 80/25E **BS.. 3NMS 80/250D** **BS.. 3NMS 80/250C/A** **BS.. 3NMS 80/250B/A** **BS.. 3NMS 80/250A/A**	300 (1	250	1855 1855 1400* 1400* 1400*	1700* 1700* - - -	360 260 310 310 310	700	755	725 725 975 1040 1110	-	1900	-	-

Dimensions not binding to be verified when ordering

(1 Only on request * Cabinet version

CALPEDA ROMANIA - INFINITY PUMPS SRL
Tel: 0268.33.47.47 / 0722.244.944
vanzari@calpeda.ro | www.calpeda.ro

BS. NM. ITT

Pressure boosting sets with 2 to 3 Centrifugal Pumps with I-MAT frequency converter

Dimensions and weights

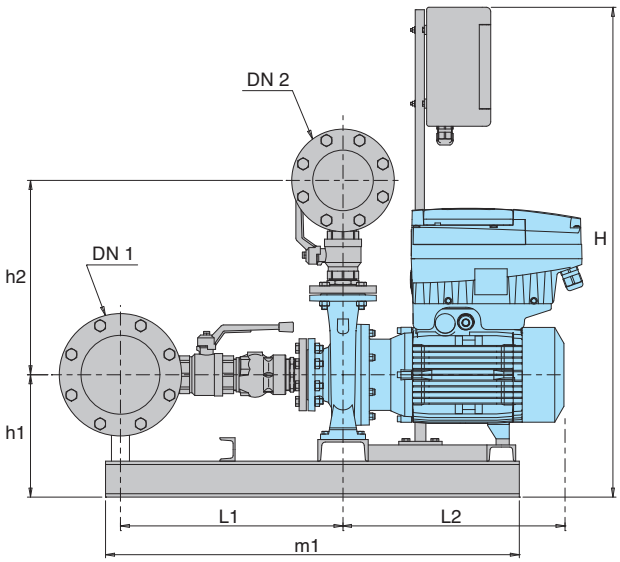

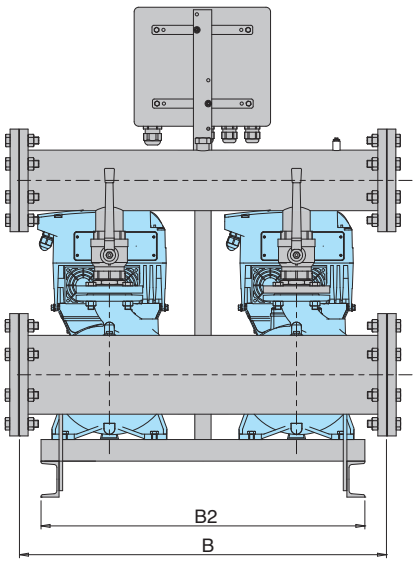

TYPE	Motor			Connection		mm								weight
	kW	HP	A	DN 1	DN 2	H	h1	h2	L1	L2	m1	B	B2	kg
BS2V 2NM 3/C/A-ITT	1,1 x2	1,5 x2	2,7 x2			876				325				
BS2V 2NM 3/B/A-ITT	1,5 x2	2 x2	4,3 x2	G 2	G 1 1/2	876	146	325	267	325	235	600	625	
BS2V 2NM 3/A/B-ITT	2,2 x2	3 x2	5,3 x2			876				365				
BS2V 2NM 25/160B/A-ITT	1,1 x2	1,5 x2	2,7 x2	G 2	G 1 1/2	876	135	305	273	324	235	600	625	
BS2V 2NM 25/160A/A-ITT	1,5 x2	2 x2	4,3 x2			876								
BS2V 2NM 25/20B/C-ITT	2,2 x2	3 x2	5,3 x2			876	160			370	235			
BS2V 2NM 25/20A/B-ITT	3 x2	4 x2	6,6 x2	G 2 1/2	G 2	883	165	330	373	397	265	600	625	
BS2V 2NM 25/20S/C-ITT	4 x2	5,5 x2	9,6 x2			883	165			397	265			
BS2V 2NM 32/16B/A-ITT	1,5 x2	2 x2	3,5 x2	G 3	G 2 1/2	876	165	345	385	330	235	600	625	
BS2V 2NM 32/16A/B-ITT	2,2 x2	3 x2	5 x2			876	165			370				
BS2V 2NM 32/20D/B-ITT	2,2 x2	3 x2	5 x2			876	195			370				
BS2V 2NM 32/20C/A-ITT	3 x2	4 x2	6,4 x2	G 3	G 2 1/2	876	195	365	385	395	235	600	625	
BS2V 2NM 32/20A/B-ITT	4 x2	5,5 x2	8,3 x2			876	195			395				
BS2V 2NM 40/16C/C-ITT	2,2 x2	3 x2	5 x2			897	187			370				
BS2V 2NM 40/16B/B-ITT	3 x2	4 x2	6,4 x2	100	80	897	187	380	480	395	550	820	800	
BS2V 2NM 40/16A/C-ITT	4 x2	5,5 x2	8,3 x2			897	187			395				
BS2V 2NM 40/20D/B-ITT	4 x2	5,5 x2	8,3 x2			897	215			395				
BS2V 2NM 40/20C/B-ITT	4 x2	5,5 x2	8,3 x2			897	215			395				
BS2V 2NM 40/20B/A-ITT	5,5 x2	7,5 x2	12,5 x2	100	80	897	215	400	500	425	550	820	800	
BS2V 2NM 40/20AR/A-ITT	5,5 x2	7,5 x2	12,5 x2			897	215			425				
BS2V 2NM 40/20A/A-ITT	7,5 x2	10 x2	16 x2			897	215			425				
BS2V 2NM 40/25C/C-ITT	9,2 x2	12,5 x2	19 x2	100	80	977	340	440	500	540	-	820	-	
BS2V 2NM 40/25B/C-ITT	11 x2	15 x2	22,5 x2			977	340			590				
BS2V 2NM 50/16B/B-ITT	5,5 x2	7,5 x2	12,5 x2	125	100	977	315	435	515	425	-	-	-	
BS2V 2NM 50/16A/B-ITT	7,5 x2	10 x2	16 x2			977	215			425				
BS2V 2NM 50/20B/C-ITT	9,2 x2	12,5 x2	19 x2	125	100	977	315	455	515	540	-	820	-	
BS2V 2NM 50/20A/C-ITT	11 x2	15 x2	22,5 x2			977	215			590				
BS2V 2NM 50/25C/C-ITT	11 x2	15 x2	22,5 x2	125	100	977	340	480	515	595	-	820		
BS2V 2NM 65/16D/B-ITT	7,5 x2	10 x2	16 x2			977	320			425				
BS2V 2NM 65/16C/C-ITT	9,2 x2	12,5 x2	19 x2	200	150	977	320	525	625	540	-	1020	-	
BS2V 2NM 65/16B/C-ITT	11 x2	15 x2	22,5 x2			977	220			590				
BS2V 2NM 80/16E/B-ITT	7,5 x2	10 x2	16 x2			977	340			445				
BS2V 2NM 80/16D/C-ITT	9,2 x2	12,5 x2	19 x2	250	200	977	340	615	730	570	-	1050	-	
BS2V 2NM 80/16C/C-ITT	11 x2	15 x2	22,5 x2			977	340			620				

Dimensions not binding to be verified when ordering

CALPEDA ROMANIA - INFINITY PUMPS SRL
Tel: 0268.33.47.47 / 0722.244.944
vanzari@calpeda.ro | www.calpeda.ro

BS. NM. ITT

Pressure boosting sets with 2 to 3 Centrifugal Pumps with I-MAT frequency converter

Dimensions and weights

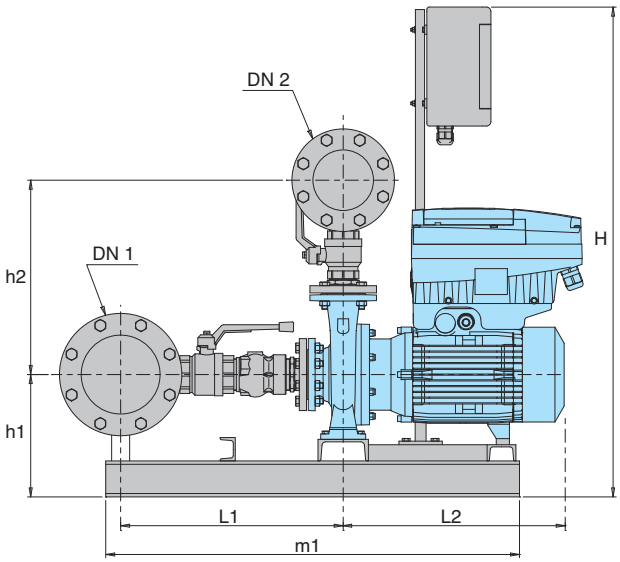

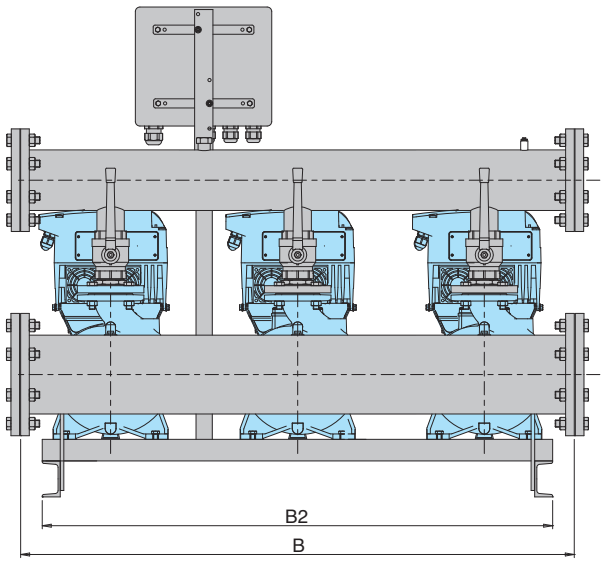

TYPE	Motor			Connection		mm								weight
	kW	HP	A	DN 1	DN 2	H	h1	h2	L1	L2	m1	B	B2	kg
BS3V 3NM 3/C/A-ITT	1,1 x3	1,5 x3	2,7 x3			876				325				
BS3V 3NM 3/B/A-ITT	1,5 x3	2 x3	4,3 x3	G 2	G 2	876	146	316	-	325	423	950	1000	
BS3V 3NM 3/A/B-ITT	2,2 x3	3 x3	5,3 x3			876				365				
BS3V 3NM 25/160B/A-ITT	1,1 x3	1,5 x3	2,7 x3	G 2	G 2	876	135	290	-	324	423	950	1000	
BS3V 3NM 25/160A/A-ITT	1,5 x3	2 x3	4,3 x3			876								
BS3V 3NM 25/20B/C-ITT	2,2 x3	3 x3	5,3 x3			876	160			370				
BS3V 3NM 25/20A/B-ITT	3 x3	4 x3	6,6 x3	G 3	G 2 1/2	883	165	316	-	397	423	950	1000	
BS3V 3NM 25/20S/C-ITT	4 x3	5,5 x3	9,6 x3			883	165			397				
BS3V 3NM 32/16B/A-ITT	1,5 x3	2 x3	3,5 x3	100	80	876	165	-	-	330	-	950	-	
BS3V 3NM 32/16A/B-ITT	2,2 x3	3 x3	5 x3			876	165			370				
BS3V 3NM 32/20D/B-ITT	2,2 x3	3 x3	5 x3			876	195			370				
BS3V 3NM 32/20C/A-ITT	3 x3	4 x3	6,4 x3	100	80	876	195	-	-	395	-	950	-	
BS3V 3NM 32/20A/B-ITT	4 x3	5,5 x3	8,3 x3			876	195			395				
BS3V 3NM 40/16C/C-ITT	2,2 x3	3 x3	5 x3			897	187			370				
BS3V 3NM 40/16B/B-ITT	3 x3	4 x3	6,4 x3	125	100	897	187	390	495	395	-	1340	-	
BS3V 3NM 40/16A/C-ITT	4 x3	5,5 x3	8,3 x3			897	187			395				
BS3V 3NM 40/20D/B-ITT	4 x3	5,5 x3	8,3 x3			897	215			395				
BS3V 3NM 40/20C/B-ITT	4 x3	5,5 x3	8,3 x3			897	215			395				
BS3V 3NM 40/20B/A-ITT	5,5 x3	7,5 x3	12,5 x3	125	100	897	215	410	515	425	-	1340	-	
BS3V 3NM 40/20AR/A-ITT	5,5 x3	7,5 x3	12,5 x3			897	215			425				
BS3V 3NM 40/20A/A-ITT	7,5 x3	10 x3	16 x3			897	215			425				
BS3V 3NM 40/25C/C-ITT	9,2 x3	12,5 x3	19 x3	125	100	977	340	450	515	540	-	1340	-	
BS3V 3NM 40/25B/C-ITT	11 x3	15 x3	22,5 x3			977	340			590				
BS3V 3NM 50/16B/B-ITT	5,5 x3	7,5 x3	12,5 x3	150	125	977	315	448	525	425	-	1340	-	
BS3V 3NM 50/16A/B-ITT	7,5 x3	10 x3	16 x3			977	215			425				
BS3V 3NM 50/20B/C-ITT	9,2 x3	12,5 x3	19 x3	150	125	977	315	468	525	540	-	1340	-	
BS3V 3NM 50/20A/C-ITT	11 x3	15 x3	22,5 x3			977	215			590				
BS3V 3NM 50/25C/C-ITT	11 x3	15 x3	22,5 x3	150	125	977	340	493	525	595	-	1340	-	
BS3V 3NM 65/16D/B-ITT	7,5 x3	10 x3	16 x3			977	320			425				
BS3V 3NM 65/16C/C-ITT	9,2 x3	12,5 x3	19 x3	250	200	977	320	555	650	540	-	1540	-	
BS3V 3NM 65/16B/C-ITT	11 x3	15 x3	22,5 x3			977	220			590				
BS3V 3NM 80/16E/B-ITT	7,5 x3	10 x3	16 x3			977	340			445				
BS3V 3NM 80/16D/C-ITT	9,2 x3	12,5 x3	19 x3	300	250	977	340	645	755	570	-	1600	-	
BS3V 3NM 80/16C/C-ITT	11 x3	15 x3	22,5 x3			977	340			620				

Dimensions not binding to be verified when ordering

CALPEDA ROMANIA - INFINITY PUMPS SRL
Tel: 0268.33.47.47 / 0722.244.944
vanzari@calpeda.ro | www.calpeda.ro

BS. MXH

Pressure boosting sets with 1 to 3 Horizontal Multi-Stage Pumps
Fixed speed pump or Variable speed pump (frequency converter)

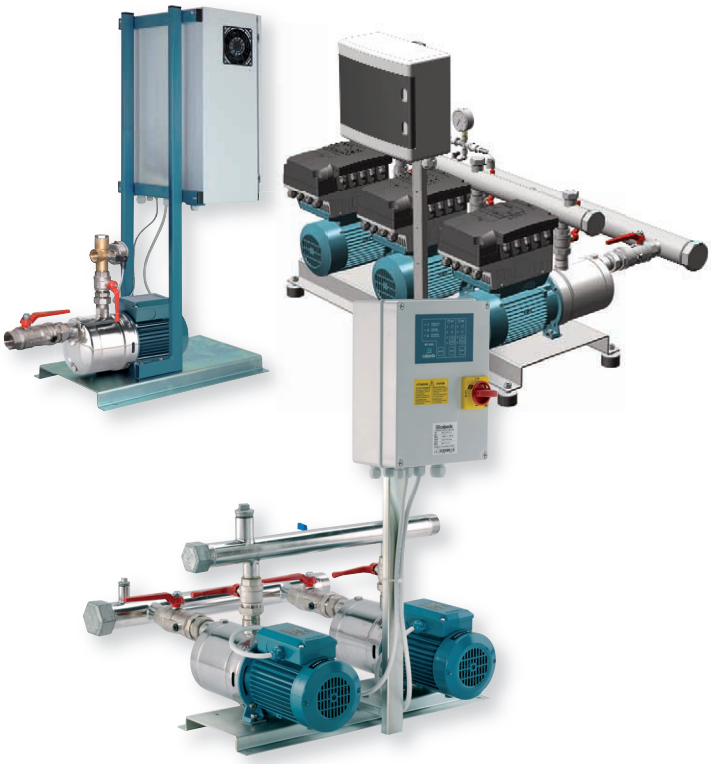

Coverage chart

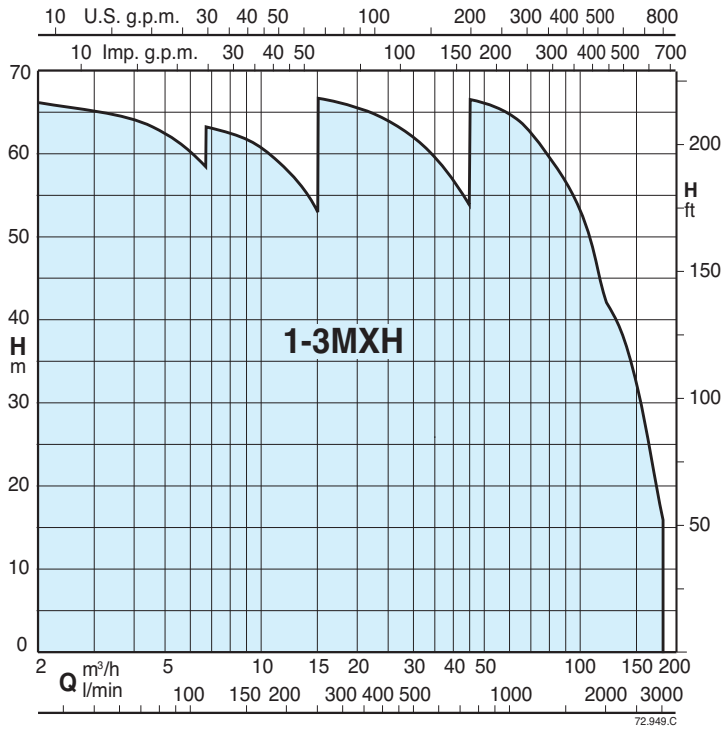

Operation

BS 1-6F **Pressure boosting sets with 1 to 6 fixed speed pump.**
Sets with 4,5 and 6 pumps on request.
Depending on the reduction of the pressure in the system, the pressure switches determine the starting up of the pumps in sequence and the microprocessor alternates the starts.

BS2-3V **Pressure boosting sets with 2 to 3 variable speed pumps (with I-MAT).**
Depending on water consumption, one or more pumps are activated, all at variable speed, in order to guarantee the quantity of water required at the set pressure.

BS1-3V **Pressure boosting sets with 1 to 3 variable speed pumps (with EASYMAT).**
Depending on water consumption, one or more pumps are activated, all at variable speed, in order to guarantee the quantity of water required at the set pressure.

BS1-2V **Pressure boosting sets with 1 to 2 variable speed pumps (with VARIOMAT2).**
Depending on water consumption, one or more pumps are activated, all at variable speed, in order to guarantee the quantity of water required at the set pressure.

BS1V2-5F **Pressure boosting sets with 1 variable speed pump (with frequency converter into the control panel) and from 1 to 5 fixed speed pumps**
Sets with 4,5 and 6 pumps on request.
According to the water consumption, one or more pumps start, one at variable speed and the others at fixed speed, to grant the water quantity required at the set pressure.

BS1-6V **Pressure boosting sets with 1 to 6 variable speed pumps (with frequency converter into the control panel).**
Sets with 4,5 and 6 pumps on request.
Depending on water consumption, one or more pumps are activated, all at variable speed, in order to guarantee the quantity of water required at the set pressure.

Construction

- Automatic pressure boosting plant consisting of 1 to 6 horizontal multi-stage pumps complete with ball, non return valve on the suction side and ball valves on the delivery side.

Suction and delivery manifolds for boosting sets with 2,3 pumps:
- stainless steel AISI 304.

Connections are located on the delivery manifold for the installation of vessels G1 connection.

Electrical control boards:
- with microprocessor for fixed speed pump units. Motor starting is D.O.L. up to 5,5 kW and Y/Δ for power rating 7,5 kW.
- with frequency converter for variable speed pump units.

The unit includes one pressure gauge and three adjustable differential pressure switches or pressure transducer.

Applications

To supply water in civil and industrial buildings.
As pressure boosting pump to increase water pressure when needed (follow local rules).

Motors

2-pole induction motors, 50 Hz, n ≈ 2900 rpm, suitable for operation with frequency converter.
- Three-phase 230/400V ± 10% up to 3 kW;
  400/690V ± 10% for 4 kW to 7,5 kW;
- Single-phase 230 V ± 10%, with thermal protector.

Insulation class F.
Protection IP 54.
Constructed in accordance with: IEC 60034.
Other voltages and frequencies on request.

Vessels on request

When installing the unit, connect in the delivery section to a diaphragm or galvanised tank.
The recommended sized are shown in the following page.

Special features on request

Pressure boosting sets with 4,5 and 6 pumps.

CALPEDA ROMANIA - INFINITY PUMPS SRL
Tel: 0268.33.47.47 / 0722.244.944
vanzari@calpeda.ro | www.calpeda.ro

BS. MXH

Pressure boosting sets with 1 to 3 Horizontal Multi-Stage Pumps
Fixed speed pump or Variable speed pump (frequency converter)

Coverage chart

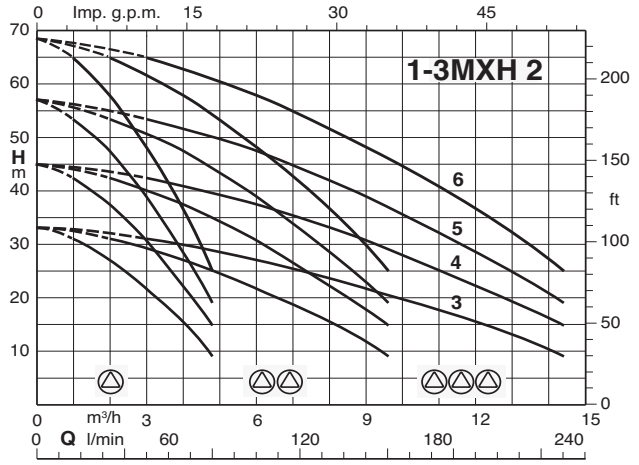

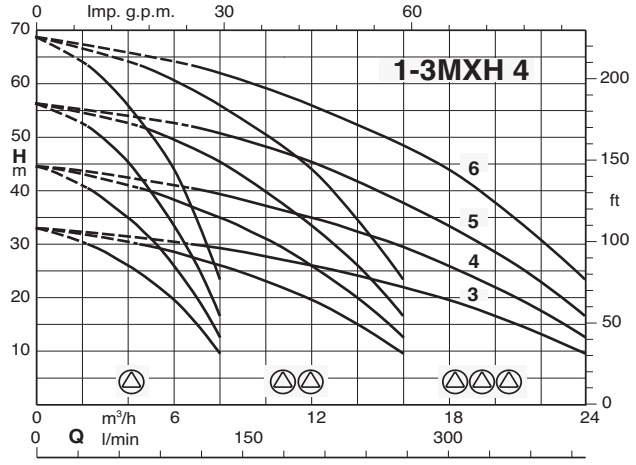

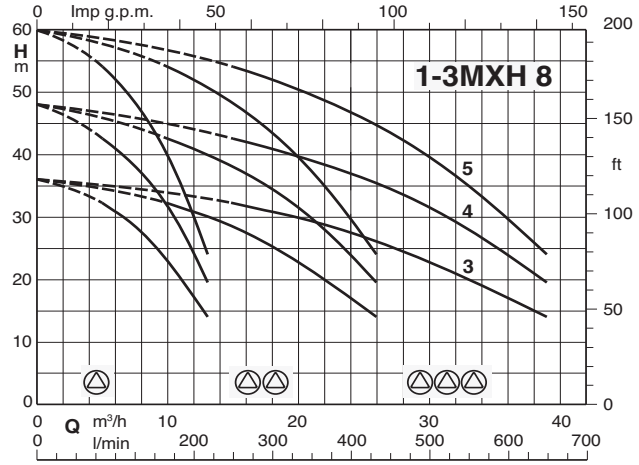

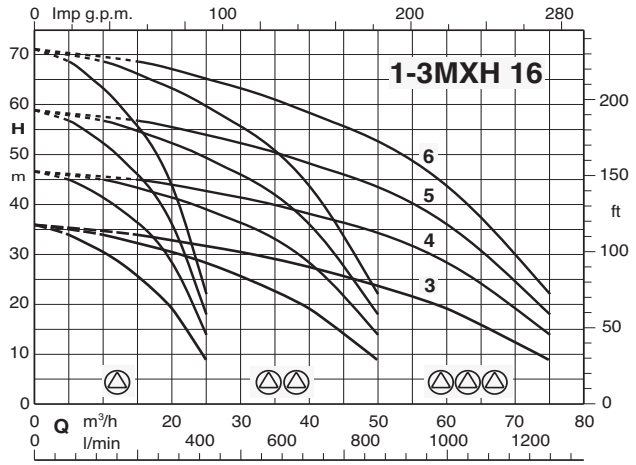

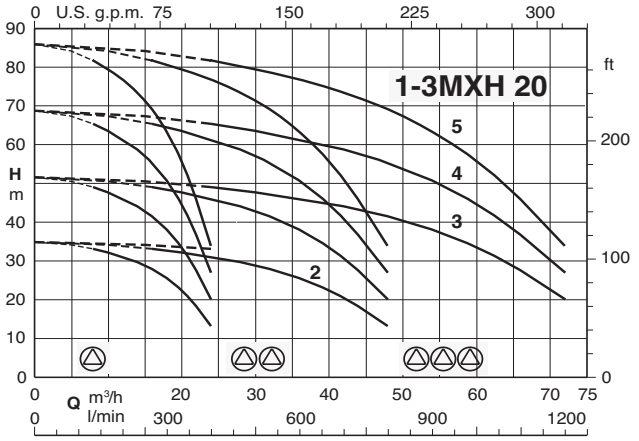

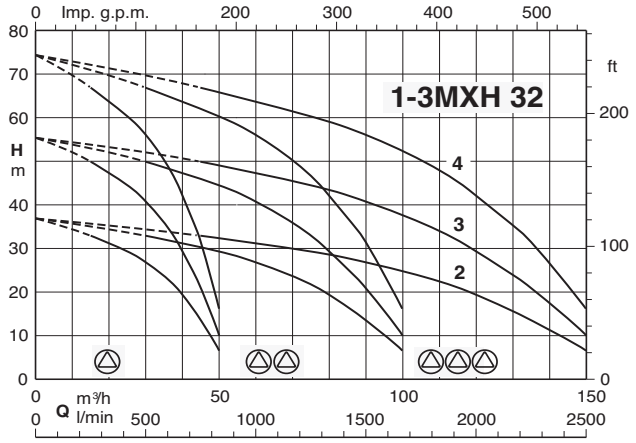

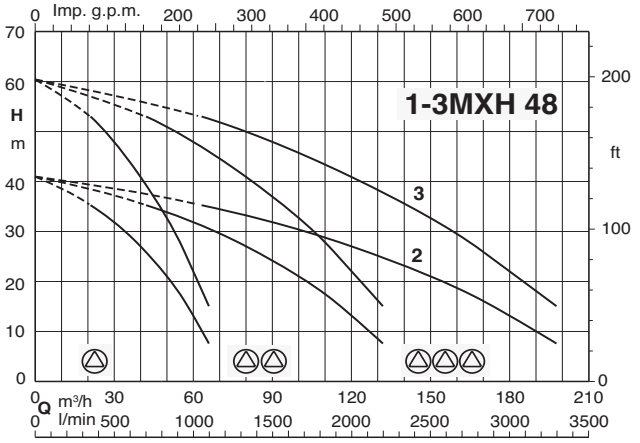

CALPEDA ROMANIA - INFINITY PUMPS SRL
Tel: 0268.33.47.47 / 0722.244.944
vanzari@calpeda.ro | www.calpeda.ro

BS. MXH

Pressure boosting sets with 1 to 3 Horizontal Multi-Stage Pumps
Fixed speed pump or Variable speed pump (frequency converter)

calpeda®

Performance

BS1F BSM1F

Mains: 400V 3~ Motor: 400V 3~	Mains: 230V 1~ Motor: 230V 1~	Motor		Pres. switch 1 bar		Maximum capacity *		Vessel Membrane	Vessel
		kW	HP	min	max	Q l/min	H m	litre	litre
BS1F 1MXH 203E	**BSM1F 1MXHM 203E**	0,45	0,6	1,4	2,8	70	14	24	100
BS1F 1MXH 204/A	**BSM1F 1MXHM 204/A**	0,55	0,75	2,8	4	55	29	40	100
BS1F 1MXH 205/B	**BSM1F 1MXHM 205/A**	0,75	1	3,5	5	56	36	50	100
BS1F 1MXH 206/C	**BSM1F 1MXHM 206**	1,1	1,5	4	6	61	41	50	100
BS1F 1MXH 403/A	**BSM1F 1MXHM 403/A**	0,55	0,75	1,4	2,6	122	14	60	100
BS1F 1MXH 404/B	**BSM1F 1MXHM 404/A**	0,75	1	2,4	3,6	107	24	80	200
BS1F 1MXH 405/C	**BSM1F 1MXHM 405**	1,1	1,5	3,4	4,9	102	35	100	200
BS1F 1MXH 406/A	**BSM1F 1MXHM 406**	1,5	2	4	6	111	41	100	200
BS1F 1MXH 803/A	**BSM1F 1MXHM 803**	1,1	1,5	1,6	2,8	209	16	100	300
BS1F 1MXH 804/A	**BSM1F 1MXHM 804**	1,5	2	2,8	4	186	29	200	300
BS1F 1MXH 805/B		1,8	2,5	3,5	5	186	36	200	500
BS1F 1MXH 1603/B		1,8	2,5	1,5	3	382	15	300	500
BS1F 1MXH 1604/A		3	4	2,8	4	353	29	500	1000
BS1F 1MXH 1605/B		3,7	5	3,8	5,3	331	39	500	1000
BS1F 1MXH 1606/B		4	5,5	4,5	6,5	329	46	500	800
BS1F 1MXH 2002/A		1,8	2,5	1,5	2,8	399	15	300	500
BS1F 1MXH 2003		3	4	3	4,5	367	31	500	1000
BS1F 1MXH 2004/A		4	5,5	4,4	5,9	348	45	1000	1500
BS1F 1MXH 2005		5,5	7,5	5,5	7	343	56	1000	1500
BS1F 1MXH-F 3202/B		4	5,5	1,5	3	770	15	1000	2000
BS1F 1MXH-F 3203/A		5,5	7,5	3	4,5	682	31	1000	2000
BS1F 1MXH-F 3204/A		7,5	10	4	6	725	41	1500	3000
BS1F 1MXH-F 4802/A		5,5	7,5	1,5	3	975	15	1500	2000
BS1F 1MXH-F 4803/A		7,5	10	3	4,5	886	31	2000	3000

* Maximum pumps flow at minimum setting pressure switch.

BS2F BSM2F

Mains: 400V 3~ Motor: 400V 3~	Alimentazione 230V 1~ Motore 230V 1~	Motor		Pres. switch 1 bar		Pres. switch 2 bar		Maximum capacity *		Vessel Membrane	Vessel
		kW	HP	min	max	min	max	Q l/min	H m	litre	litre
BS2F 2MXH 203E	**BSM2F 2MXHM 203E**	0,45 x2	0,6 x2	1,4	2,8	1	2,4	156	10	24	100
BS2F 2MXH 204/A	**BSM2F 2MXHM 204/A**	0,55 x2	0,75 x2	2,8	4	2,4	3,6	128	24	40	100
BS2F 2MXH 205/B	**BSM2F 2MXHM 205/A**	0,75 x2	1 x2	3,5	5	3	4,5	130	31	50	100
BS2F 2MXH 206/C	**BSM2F 2MXHM 206**	1,1 x2	1,5 x2	4	6	3,5	5,5	136	36	50	100
BS2F 2MXH 403/A	**BSM2F 2MXHM 403/A**	0,55 x2	0,75 x2	1,4	2,6	1	2,2	264	10	60	100
BS2F 2MXH 404/B	**BSM2F 2MXHM 404/A**	0,75 x2	1 x2	2,4	3,6	2	3,2	237	20	80	200
BS2F 2MXH 405/C	**BSM2F 2MXHM 405**	1,1 x2	1,5 x2	3,4	4,9	3	4,5	224	31	100	200
BS2F 2MXH 406/A	**BSM2F 2MXHM 406**	1,5 x2	2 x2	4	6	3,5	5,5	241	36	100	200
BS2F 2MXH 803/A	**BSM2F 2MXHM 803**	1,1 x2	1,5 x2	1,6	2,8	1,2	2,4	442	12	100	300
BS2F 2MXH 804/A	**BSM2F 2MXHM 804**	1,5 x2	2 x2	2,8	4	2,4	3,6	406	24	200	300
BS2F 2MXH 805/B		1,8 x2	2,5 x2	3,5	5	3	4,5	405	31	200	500
BS2F 2MXH 1603/B		1,8 x2	2,5 x2	1,5	3	1,2	2,7	805	12	300	500
BS2F 2MXH 1604/A		3 x2	4 x2	2,8	4	2,4	3,6	770	24	500	1000
BS2F 2MXH 1605/B		3,7 x2	5 x2	3,8	5,3	3,4	4,9	728	35	500	1000
BS2F 2MXH 1606/B		4 x2	5,5 x2	4,5	6,5	4	6	725	41	500	800
BS2F 2MXH 2002/A		1,8 x2	2,5 x2	1,5	2,8	1,2	2,5	797	12	300	500
BS2F 2MXH 2003		3 x2	4 x2	3	4,5	2,5	4	785	25	500	1000
BS2F 2MXH 2004/A		4 x2	5,5 x2	4,4	5,9	3,9	5,4	752	40	1000	1500
BS2F 2MXH 2005		5,5 x2	7,5 x2	5,5	7	5,1	6,6	725	52	1000	1500
BS2F 2MXH-F 3202/B		4 x2	5,5 x2	1,5	3	1,2	2,7	1615	12	1000	2000
BS2F 2MXH-F 3203/A		5,5 x2	7,5 x2	3	4,5	2,5	4	1498	25	1000	2000
BS2F 2MXH-F 3204/A		7,5 x2	10 x2	4	6	3,5	5,5	1549	36	1500	3000
BS2F 2MXH-F 4802/A		5,5 x2	7,5 x2	1,5	3	1,2	2,7	2064	12	1500	2000
BS2F 2MXH-F 4803/A		7,5 x2	10 x2	3	4,5	2,5	4	1946	25	2000	3000

* Maximum pumps flow at minimum setting pressure of 2 nd pressure switch.

BS3F

Mains: 400V 3~ Motor: 400V 3~	Motor		Pres. switch 1 bar		Pres. switch 2 bar		Pres. switch 3 bar		Maximum capacity *		Vessel Membrane	Vessel
	kW	HP	min	max	min	max	min	max	Q l/min	H m	litre	litre
BS3F 3MXH 203E	0,45 x3	0,6 x3	1,4	2,8	1	2,4	0,6	2	253	6	24	100
BS3F 3MXH 204/A	0,55 x3	0,75 x3	2,8	4	2,4	3,6	2	3,2	215	20	40	100
BS3F 3MXH 205/B	0,75 x3	1 x3	3,5	5	3	4,5	2,5	4	217	25	50	100
BS3F 3MXH 206/C	1,1 x3	1,5 x3	4	6	3,5	5,5	3	5	223	31	50	100
BS3F 3MXH 403/A	0,55 x3	0,75 x3	1,4	2,6	1	2,2	0,6	1,8	413	6	60	100
BS3F 3MXH 404/B	0,75 x3	1 x3	2,4	3,6	2	3,2	1,6	2,8	382	16	80	200
BS3F 3MXH 405/C	1,1 x3	1,5 x3	3,4	4,9	3	4,5	2,6	4,1	361	27	100	200
BS3F 3MXH 406/A	1,5 x3	2 x3	4	6	3,5	5,5	3	5	383	31	100	200
BS3F 3MXH 803/A	1,1 x3	1,5 x3	1,8	2,8	1,4	2,4	1	2	676	10	100	300
BS3F 3MXH 804/A	1,5 x3	2 x3	2,8	4	2,4	3,6	2	3,2	645	20	200	300
BS3F 3MXH 805/B	1,8 x3	2,5 x3	3,5	5	3	4,5	2,5	4	643	25	200	500
BS3F 3MXH 1603/B	1,8 x3	2,5 x3	1,5	3	1,2	2,7	0,9	2,4	1247	9	300	500
BS3F 3MXH 1604/A	3 x3	4 x3	2,8	4	2,4	3,6	2	3,2	1217	20	500	1000
BS3F 3MXH 1605/B	3,7 x3	5 x3	3,8	5,3	3,4	4,9	3	4,5	1165	31	500	1000
BS3F 3MXH 1606/B	4 x3	5,5 x3	4,5	6,5	4	6	3,5	5,5	1166	36	500	800
BS3F 3MXH 2003	3 x3	4 x3	3	4,5	2,5	4	2	3,5	1201	20	500	1000
BS3F 3MXH 2004/A	4 x3	5,5 x3	4,4	5,9	3,9	5,4	3,4	4,9	1181	35	1000	1500
BS3F 3MXH 2005	5,5 x3	7,5 x3	5,5	7	5,1	6,6	4,7	6,2	1134	47	1000	1500
BS3F 3MXH-F 3202/B	4 x3	5,5 x3	1,5	3	1,2	2,7	0,9	2,4	2486	9	1000	2000
BS3F 3MXH-F 3203/A	5,5 x3	7,5 x3	3	4,5	2,5	4	2	3,5	2389	20	1000	2000
BS3F 3MXH-F 3204/A	7,5 x3	10 x3	4	6	3,5	5,5	3	5	2429	31	1500	3000
BS3F 3MXH-F 4802/A	5,5 x3	7,5 x3	1,5	3	1,2	2,7	0,9	2,4	3237	9	1500	2000
BS3F 3MXH-F 4803/A	7,5 x3	10 x3	3	4,5	2,5	4	2	3,5	3140	20	2000	3000

* Maximum pumps flow at minimum setting pressure of 3 nd pressure switch.

CALPEDA ROMANIA - INFINITY PUMPS SRL
Tel: 0268.33.47.47 / 0722.244.944
vanzari@calpeda.ro | www.calpeda.ro

BS. MXH

Pressure boosting sets with 1 to 3 Horizontal Multi-Stage Pumps
Fixed speed pump or Variable speed pump (frequency converter)

Performance

BS..

PUMPS Nos						PUMP TYPE	P_2 For each pump	
1	2	3	4	5	6		kW	HP
BS1V	BS2V BS1V1F BSM1V1F* BSM2V**	BS3V BS1V2F	BS4V BS1V3F	BS5V BS1V4F	BS6V BS1V5F	MXH 203E	0,45	0,6
						MXH 204/A	0,55	0,75
						MXH 205/B	0,75	1
						MXH 206/C	1,1	1,5
						MXH 403/A	0,55	0,75
						MXH 404/B	0,75	1
						MXH 405/C	1,1	1,5
						MXH 406/A	1,5	2
						MXH 803/A	1,1	1,5
						MXH 804/A	1,5	2
						MXH 805/B	1,8	2,5
						MXH 1603/B	1,8	2,5
						MXH 1604/A	3	4
						MXH 1605/B	3,7	5
						MXH 1606/B	4	5,5
						MXH 2002/A	1,8	2,5
						MXH 2003	3	4
						MXH 2004/A	4	5,5
						MXH 2005	5,5	7,5
						MXH-F 3202/B	4	5,5
						MXH-F 3203/A	5,5	7,5
						MXH-F 3204/A	7,5	10
						MXH-F 4802/A	5,5	7,5
						MXH-F 4803/A	7,5	10

BS.. ..-ITT

PUMPS Nos		PUMP TYPE	P_2 For each pump	
2	3		kW	HP
BS2V -ITT	BS3V -ITT	MXH 204/A-ITT	0,55	0,75
		MXH 205/B-ITT	0,75	1
		MXH 206/C-ITT	1,1	1,5
		MXH 403/A-ITT	0,55	0,75
		MXH 404/B-ITT	0,75	1
		MXH 405/C-ITT	1,1	1,5
		MXH 406/A-ITT	1,5	2
		MXH 803/A-ITT	1,1	1,5
		MXH 804/A-ITT	1,5	2
		MXH 805/B-ITT	1,8	2,5
		MXH 1603/B-ITT	1,8	2,5
		MXH 1604/A-ITT	3	4
		MXH 1605/B-ITT	3,7	5
		MXH 1606/B-ITT	4	5,5
		MXH 2001/A-ITT	1,1	1,5
		MXH 2002/A-ITT	1,8	2,5
		MXH 2003-ITT	3	4
		MXH 2004/A-ITT	4	5,5
		MXH 2005-ITT	5,5	7,5
		MXH-F 3201/B-ITT	2,2	3
		MXH-F 3202/B-ITT	4	5,5
		MXH-F 3203/A-ITT	5,5	7,5
		MXH-F 3204/A-ITT	7,5	10
		MXH-F 4801/A-ITT	3	4
		MXH-F 4802/A-ITT	5,5	7,5
		MXH-F 4803/A-ITT	7,5	10

(*) SYSTEMS WITH:
1 variable speed pump three-phase motor
1 fixed speed pump single-phase motor
Power supply to control panel 230 V single-phase

(**) Three-phase motor 230 V.
Power supply to control panel: - 230 V three-phase
- 230 V single-phase
Frequency converter output is alwais 230 V three-phase.

BS.. ..-EMT, EMM

PUMPS Nos			PUMP TYPE	P_2 For each pump	
1	2	3		kW	HP
BSM1V -EMT -EMM	BSM2V -EMT	BSM3V -EMT	MXH 203E-EMT	0,45	0,6
			MXH 204/A-EMT	0,55	0,75
			MXH 205/B-EMT	0,75	1
			MXH 206/C-EMT	1,1	1,5
			MXH 403/A-EMT	0,55	0,75
			MXH 404/B-EMT	0,75	1
			MXH 405/C-EMT	1,1	1,5
			MXH 406/A-EMT	1,5	2
			MXH 803/A-EMT	1,1	1,5
			MXH 804/A-EMT	1,5	2
			MXH 805/B-EMT	1,8	2,5
			MXH 1602/A-EMT	1,5	2
			MXH 1603/B-EMT	1,8	2,5

BS.. ..-VTT2/A

PUMPS Nos		PUMP TYPE	P_2 For each pump	
1	2		kW	HP
BS1V -VTT2/A	BS2V -VTT2/A	MXH 203E-VTT2/A	0,45	0,6
		MXH 204/A-VTT2/A	0,55	0,75
		MXH 205/B-VTT2/A	0,75	1
		MXH 206/C-VTT2/A	1,1	1,5
		MXH 403/A-VTT2/A	0,55	0,75
		MXH 404/B-VTT2/A	0,75	1
		MXH 405/C-VTT2/A	1,1	1,5
		MXH 406/A-VTT2/A	1,5	2
		MXH 803/A-VTT2/A	1,1	1,5
		MXH 804/A-VTT2/A	1,5	2
		MXH 805/B-VTT2/A	1,8	2,5
		MXH 1602/A-VTT2/A	1,5	2
		MXH 1603/B-VTT2/A	1,8	2,5

CALPEDA ROMANIA - INFINITY PUMPS SRL
Tel: 0268.33.47.47 / 0722.244.944
vanzari@calpeda.ro | www.calpeda.ro

BS. MXH

Pressure boosting sets with 1 to 3 Horizontal Multi-Stage Pumps
Fixed speed pump or Variable speed pump (frequency converter)

Dimensions and weights

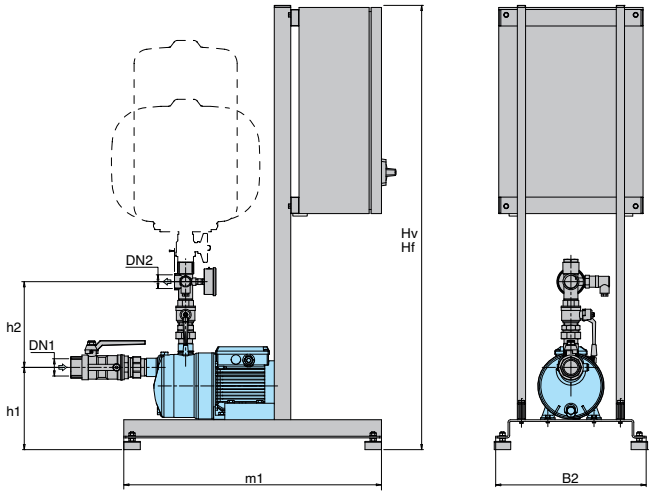

TYPE	Connection		mm						weight
	DN 1	DN 2	Hv	Hf	h1	h2	m1	B2	kg
BS1.. 1MXH 203E	G 1 1/4	G 1	1045	875	170	145	625	365	-
BS1.. 1MXH 204/A									
BS1.. 1MXH 205/B									
BS1.. 1MXH 206/C									
BS1.. 1MXH 403/A	G 1 1/4	G 1	1045	875	170	145	625	365	
BS1.. 1MXH 404/B									
BS1.. 1MXH 405/C									
BS1.. 1MXH 406/A									
BS1.. 1MXH 803/A	G 1 1/2	G 1	1045	875	170	145	625	365	
BS1.. 1MXH 804/A									
BS1.. 1MXH 805/B									
BS1.. 1MXH 1603/B	G 1 1/2	G 1 1/2	1045	875	175	195	625	365	
BS1.. 1MXH 1604/A									
BS1.. 1MXH 1605/B									
BS1.. 1MXH 1606/B									

Dimensions not binding to be verified when ordering

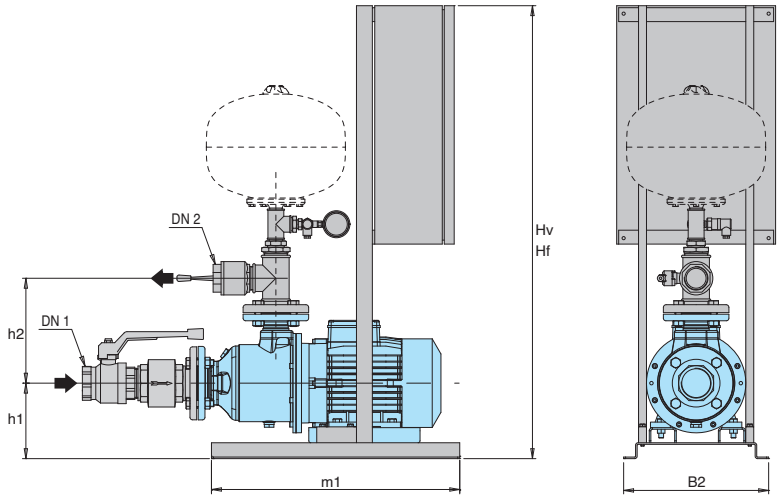

TYPE	Connection		mm						weight
	DN 1	DN 2	Hv	Hf	h1	h2	m1	B2	kg
BS1.. 1MXH 2002/A	G 2	G 1 1/2	1045	875	195	197	625	365	
BS1.. 1MXH 2003									
BS1.. 1MXH 2004/A									
BS1.. 1MXH 2005			1145	1145					
BS1.. 1MXH-F 3202/B	65	50	1045	875	195	265	625	365	
BS1.. 1MXH-F 3203/A									
BS1.. 1MXH-F 3204/A									
BS1.. 1MXH-F 4802/A	80	65	1145	1145	195	275	625	365	
BS1.. 1MXH-F 4803/A									

Dimensions not binding to be verified when ordering

CALPEDA ROMANIA - INFINITY PUMPS SRL
Tel: 0268.33.47.47 / 0722.244.944
vanzari@calpeda.ro | www.calpeda.ro

BS. MXH

Pressure boosting sets with 1 to 3 Horizontal Multi-Stage Pumps
Fixed speed pump or Variable speed pump (frequency converter)

Dimensions and weights

BS.. 2MXH 2,4,8

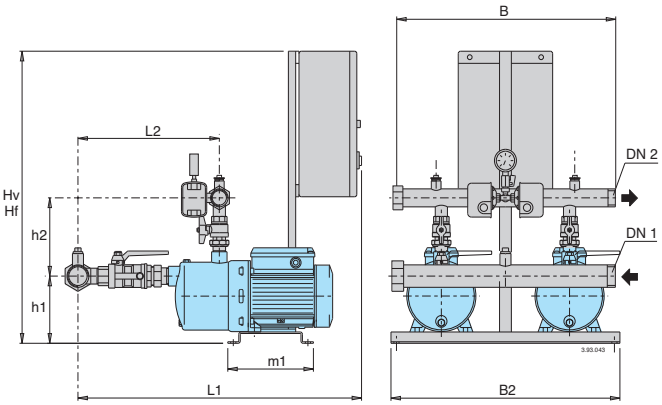

BS.. 2MXH 16

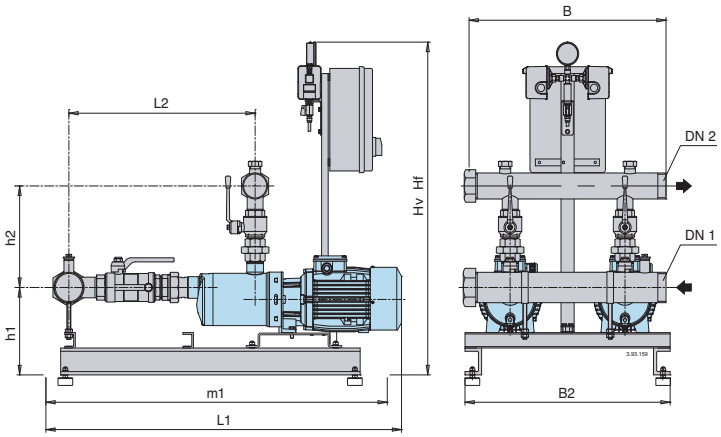

TYPE	Connection		mm									weight
	DN 1	DN 2	Hf	Hv	h1	h2	L1	L2	m1	B2	B	kg
BS.. 2MXH 203E	G 2	G 11/2	840	-	162	202	773	335	235	625	600	42
BS.. 2MXH 204/A	G 2	G 11/2	840	-	162	202	796	358				47
BS.. 2MXH 205/B	G 2	G 11/2	840	-	162	202	820	382				50
BS.. 2MXH 206/C	G 2	G 11/2	840	-	162	202	845	406				54
BS.. 2MXH 403/A	G 2	G 11/2	840	-	162	202	773	335				46
BS.. 2MXH 404/B	G 2	G 11/2	840	-	162	202	796	358				49
BS.. 2MXH 405/C	G 2	G 11/2	840	-	162	202	820	382				53
BS.. 2MXH 406/A	G 2	G 11/2	840	-	162	202	845	406				57
BS.. 2MXH 803/A	G 21/2	G 2	840	-	162	208	866	428				61
BS.. 2MXH 804/A	G 21/2	G 2	840	-	162	208	896	458				66
BS.. 2MXH 805/B	G 21/2	G 2	840	-	162	208	926	488				68
BS.. 2MXH 1603/B	G 3	G 21/2	985	-	250	295	945	490	905	625	600	87
BS.. 2MXH 1604/A	G 3	G 21/2	985	-	265	295	1045	530	1040			114
BS.. 2MXH 1605/B	G 3	G 21/2	985	-	265	295	1085	565				122
BS.. 2MXH 1606/B	G 3	G 21/2	985	-	265	295	1120	605				124

Dimensions not binding to be verified when ordering

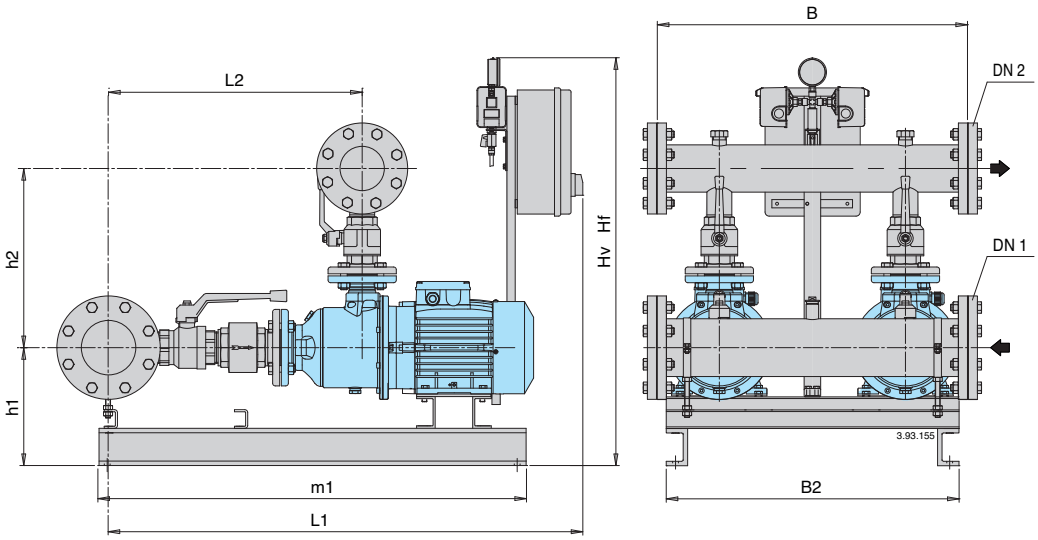

TYPE	Connection		mm									weight
	DN 1	DN 2	Hf	Hv	h1	h2	L1	L2	m1	B2	B	kg
BS.. 2MXH 2002/A	G 3	G 2 1/2	1510	-	215	391	977	499	810	800	750	
BS.. 2MXH 2003	G 3	G 2 1/2	1510	-	225	391	1013	518	810			
BS.. 2MXH 2004/A	G 3	G 2 1/2	1510	-	225	391	1048	553	810			
BS.. 2MXH 2005	G 3	G 2 1/2	1510	-	247	391	1091	587	995			
BS.. 2MXH-F 3202/B	100	80	1510	-	285	435	1265	565	1175			214
BS.. 2MXH-F 3203	100	80	1510	-	285	435	1270	615	1175			243
BS.. 2MXH-F 3204/A	100	80	1510	-	285	435	1320	660	1175			260
BS.. 2MXH-F 4802/A	125	100	1510	-	285	465	1380	665	1175			268
BS.. 2MXH-F 4803/A	125	100	1510	-	285	465	1420	725	1220			286

Dimensions not binding to be verified when ordering

CALPEDA ROMANIA - INFINITY PUMPS SRL
Tel: 0268.33.47.47 / 0722.244.944
vanzari@calpeda.ro | www.calpeda.ro

BS. MXH

Pressure boosting sets with 1 to 3 Horizontal Multi-Stage Pumps
Fixed speed pump or Variable speed pump (frequency converter)

Dimensions and weights

BS.. 3MXH 2,4,8

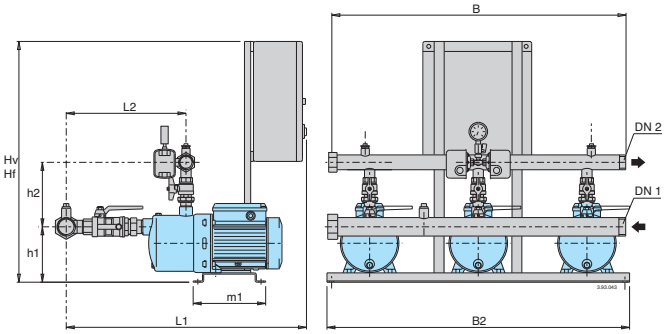

BS.. 3MXH 16

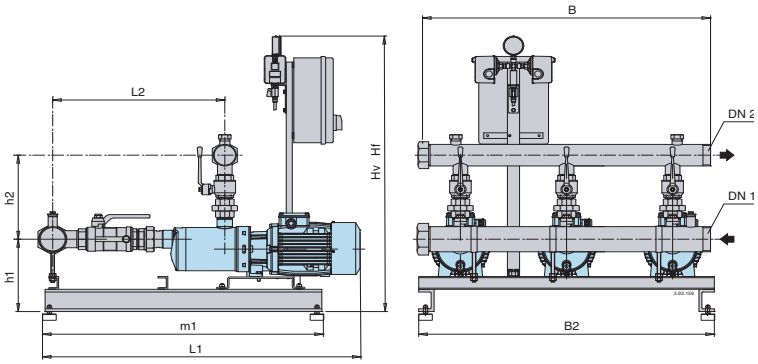

TYPE	Connection		mm									weight
	DN 1	DN 2	Hf	Hv	h1	h2	L1	L2	m1	B2	B	kg
BS.. 3MXH 203E	G 2 1/2	G 2	840	-	162	202	773	335	235	1350	1200	-
BS.. 3MXH 204/A	G 2 1/2	G 2	840	-	162	202	796	358				
BS.. 3MXH 205/B	G 2 1/2	G 2	840	-	162	202	820	382				
BS.. 3MXH 206/C	G 2 1/2	G 2	840	-	162	202	845	406				
BS.. 3MXH 403/A	G 2 1/2	G 2	840	-	162	202	773	335				
BS.. 3MXH 404/B	G 2 1/2	G 2	840	-	162	202	796	358				
BS.. 3MXH 405/C	G 2 1/2	G 2	840	-	162	202	820	382				
BS.. 3MXH 406/A	G 2 1/2	G 2	840	-	162	202	845	406				
BS.. 3MXH 803/A	G 3	G 21/2	840	-	162	208	866	428				
BS.. 3MXH 804/A	G 3	G 21/2	840	-	162	208	896	458				
BS.. 3MXH 805/B	G 3	G 21/2	840	-	162	208	926	488				
BS.. 3MXH 1603/B	DN 100	DN 80	985	-	250	295	945	490	905	1350	1200	
BS.. 3MXH 1604/A	DN 100	DN 80	985	-	265	295	1045	530	1040			
BS.. 3MXH 1605/B	DN 100	DN 80	985	-	265	295	1085	565				
BS.. 3MXH 1606/B	DN 100	DN 80	985	-	265	295	1120	605				

Dimensions not binding to be verified when ordering

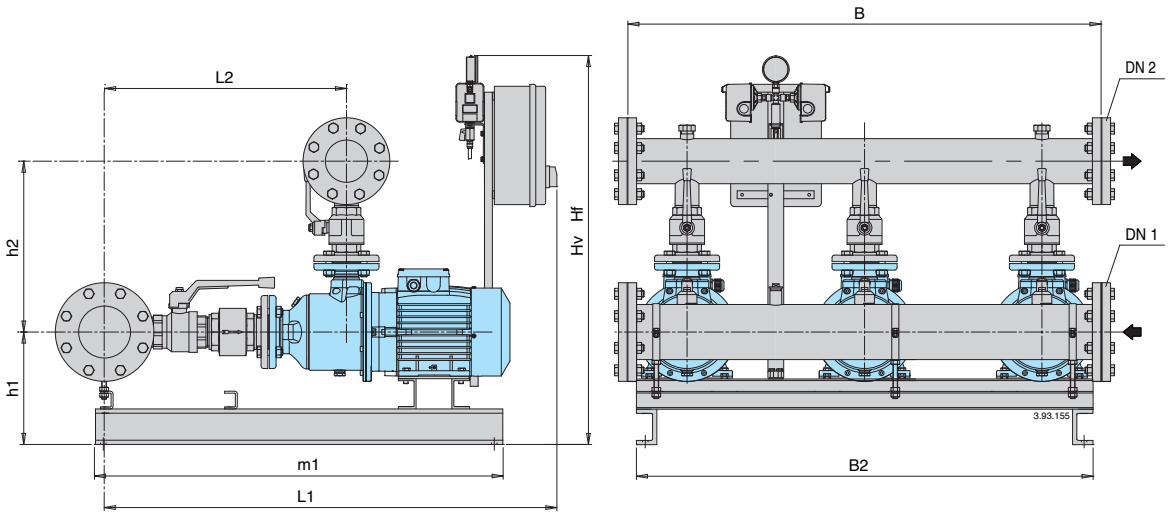

TYPE	Connection		mm									weight
	DN 1	DN 2	Hf	Hv	h1	h2	L1	L2	m1	B2	B	kg
BS.. 3MXH 2002/A	100	80	1510	-	225	391	1021	499	810	1250	1200	-
BS.. 3MXH 2003	100	80	1510	-	225	391	1037	518	810			
BS.. 3MXH 2004/A	100	80	1510	-	225	391	1092	553	810			
BS.. 3MXH 2005	100	80	1510	-	247	391	1135	597	995			
BS.. 3MXH-F 3202/B	125	100	1510	-	285	435	1265	565	1175			
BS.. 3MXH-F 3203/A	125	100	1510	-	285	435	1270	615	1175			
BS.. 3MXH-F 3204/A	125	100	1510	-	285	435	1320	660	1175			
BS.. 3MXH-F 4802/A	150	125	1510	-	285	465	1380	665	1175			
BS.. 3MXH-F 4803/A	150	125	1510	-	285	465	1420	725	1220			

Dimensions not binding to be verified when ordering

CALPEDA ROMANIA - INFINITY PUMPS SRL
Tel: 0268.33.47.47 / 0722.244.944
vanzari@calpeda.ro | www.calpeda.ro

BS. MXH. EM

Pressure boosting sets with 1 to 3 horizontal multi-stage pumps with EASYMAT frequency converter

Characteristic and dimensions

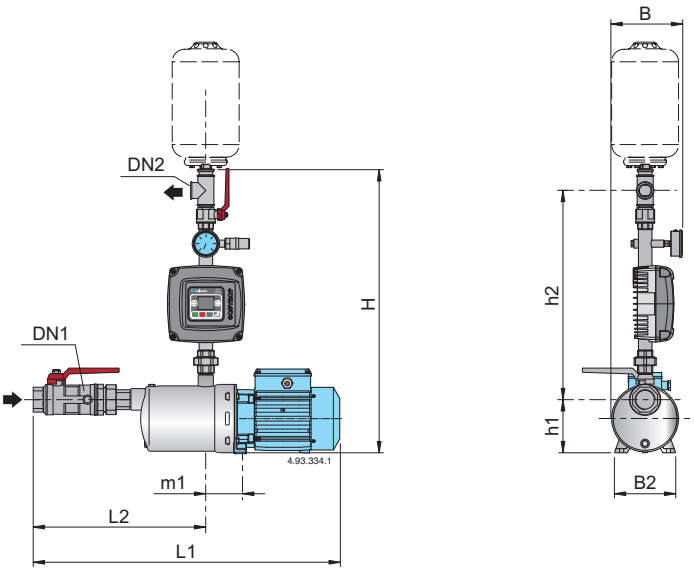

Mains: 1~ 230V Motor: 3~ 230V	mains A	motor A	Mains: 1~ 230V Motor: 1~ 230V	A	P2 kW	P2 HP	Connection DN1	Connection DN2	mm H	mm h1	mm h2	mm L1	mm L2	mm m1	mm B	mm B2
BSM1V 1MXH 203E-EMT	3,2	2,4	BSM1V 1MXHM 203E-EMM	3	0,45	0,6	G 1 1/4	G 1	708	127	516	511	274	88	165	146
BSM1V 1MXH 204/A-EMT	4	2,8	BSM1V 1MXHM 204/A-EMM	4,2	0,55	0,75						561	298			
BSM1V 1MXH 205/B-EMT	5	3,5	BSM1V 1MXHM 205/A-EMM	5,4	0,75	1						585	322			
BSM1V 1MXH 206/C-EMT	6,3	4,7	BSM1V 1MXHM 206-EMM	7,4	1,1	1,5						609	346			
BSM1V 1MXH 403/A-EMT	4	2,8	BSM1V 1MXHM 403/A-EMM	4,2	0,55	0,75	G 1 1/4	G 1	708	127	516	537	274	88	165	146
BSM1V 1MXH 404/B-EMT	5	3,5	BSM1V 1MXHM 404/A-EMM	5,4	0,75	1						561	298			
BSM1V 1MXH 405/C-EMT	6,7	4,7	BSM1V 1MXHM 405-EMM	7,4	1,1	1,5						585	322			
BSM1V 1MXH 406/A-EMT	8	6,2			1,5	2						680	346			
BSM1V 1MXH 803/A-EMT	7,1	5	BSM1V 1MXHM 803-EMM	7,4	1,1	1,5	G 1 1/2	G 1	708	127	516	657	323	88	165	146
BSM1V 1MXH 804/A-EMT	8,6	6,2			1,5	2						687	353			
BSM1V 1MXH 805/B-EMT	10,7	7,5			1,8	2,5						717	383			
BSM1V 1MXH 1602/A-EMT	9,1	6,2			1,5	2	G 2	G 1 1/2	750	117	560	752	404	101	165	146
BSM1V 1MXH 1603/B-EMT	10,7	7,5			1,8	2,5						752	404			

Dimensions not binding to be verified when ordering

CALPEDA ROMANIA - INFINITY PUMPS SRL
Tel: 0268.33.47.47 / 0722.244.944
vanzari@calpeda.ro | www.calpeda.ro

BS. MXH. EM

Pressure boosting sets with 1 to 3 horizontal multi-stage pumps with EASYMAT frequency converter

Characteristic and dimensions

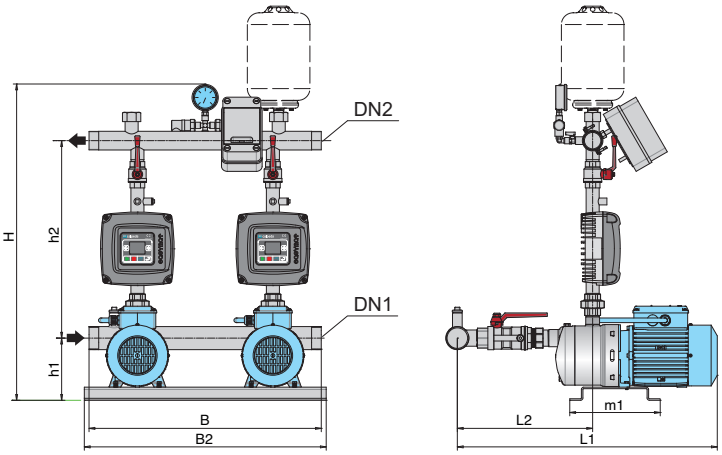

Mains: 1~ 230V Motor: 3~ 230V	mains A	motor A	P2 kW	P2 HP	Connection DN1	Connection DN2	mm H	h1	h2	L1	L2	m1	B	B2
BSM2V 2MXH 203E-EMT	2 x 3,2	2 x 2,4	2 x 0,45	2 x 0,6	G 2	G 1 1/2	848	161	506	563	326	240	600	625
BSM2V 2MXH 204/A-EMT	2 x 4	2 x 2,8	2 x 0,55	2 x 0,75						613	350			
BSM2V 2MXH 205/B-EMT	2 x 5	2 x 3,5	2 x 0,75	2 x 1						637	374			
BSM2V 2MXH 206/C-EMT	2 x 6,3	2 x 4,7	2 x 1,1	2 x 1,5						661	398			
BSM2V 2MXH 403/A-EMT	2 x 4	2 x 2,8	2 x 0,55	2 x 0,75	G 2	G 1 1/2	848	161	506	589	326	240	600	625
BSM2V 2MXH 404/B-EMT	2 x 5	2 x 3,5	2 x 0,75	2 x 1						613	350			
BSM2V 2MXH 405/C-EMT	2 x 6,7	2 x 4,7	2 x 1,1	2 x 1,5						637	374			
BSM2V 2MXH 406/A-EMT	2 x 8	2 x 6,2	2 x 1,5	2 x 2						732	398			
BSM2V 2MXH 803/A-EMT	2 x 7,1	2 x 5	2 x 1,1	2 x 1,5	G 2 1/2	G 2	854	161	512	727	393	240	600	625
BSM2V 2MXH 804/A-EMT	2 x 8,6	2 x 6,2	2 x 1,5	2 x 2						757	423			
BSM2V 2MXH 805/B-EMT	2 x 10,7	2 x 7,5	2 x 1,8	2 x 2,5						787	453			
BSM2V 2MXH 1602/A-EMT	2 x 9,1	2 x 6,2	2 x 1,5	2 x 2	G 3	G 2 1/2	882	151	551	829	481	240	600	625
BSM2V 2MXH 1603/B-EMT	2 x 10,7	2 x 7,5	2 x 1,8	2 x 2,5						829	481			

Dimensions not binding to be verified when ordering

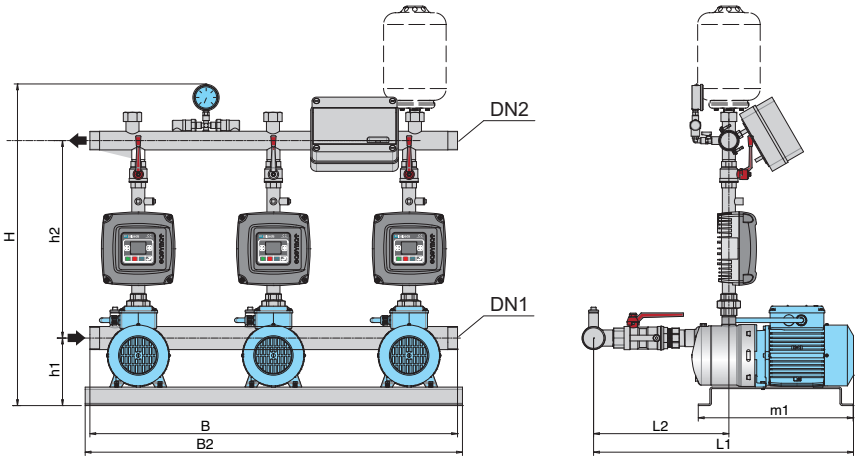

Mains: 1~ 230V Motor: 3~ 230V	mains A	motor A	P2 kW	P2 HP	Connection DN1	Connection DN2	mm H	h1	h2	L1	L2	m1	B	B2
BSM3V 3MXH 203E-EMT	3 x 3,2	3 x 2,4	3 x 0,45	3 x 0,6	G 2	G 1 1/2	848	161	506	563	326	240	600	625
BSM3V 3MXH 204/A-EMT	3 x 4	3 x 2,8	3 x 0,55	3 x 0,75						613	350			
BSM3V 3MXH 205/B-EMT	3 x 5	3 x 3,5	3 x 0,75	3 x 1						637	374			
BSM3V 3MXH 206/C-EMT	3 x 6,3	3 x 4,7	3 x 1,1	3 x 1,5						661	398			
BSM3V 3MXH 403/A-EMT	3 x 4	3 x 2,8	3 x 0,55	3 x 0,75	G 2	G 1 1/2	848	161	506	589	326	240	600	625
BSM3V 3MXH 404/B-EMT	3 x 5	3 x 3,5	3 x 0,75	3 x 1						613	350			
BSM3V 3MXH 405/C-EMT	3 x 6,7	3 x 4,7	3 x 1,1	3 x 1,5						637	374			
BSM3V 3MXH 406/A-EMT	3 x 8	3 x 6,2	3 x 1,5	3 x 2						732	398			
BSM3V 3MXH 803/A-EMT	3 x 7,1	3 x 5	3 x 1,1	3 x 1,5	G 2 1/2	G 2	854	161	512	727	393	240	600	625
BSM3V 3MXH 804/A-EMT	3 x 8,6	3 x 6,2	3 x 1,5	3 x 2						757	423			
BSM3V 3MXH 805/B-EMT	3 x 10,7	3 x 7,5	3 x 1,8	3 x 2,5						787	453			
BSM3V 3MXH 1602/A-EMT	3 x 9,1	3 x 6,2	3 x 1,5	3 x 2	G 3	G 2 1/2	882	151	551	829	481	240	600	625
BSM3V 3MXH 1603/B-EMT	3 x 10,7	3 x 7,5	3 x 1,8	3 x 2,5						829	481			

Dimensions not binding to be verified when ordering

CALPEDA ROMANIA - INFINITY PUMPS SRL
Tel: 0268.33.47.47 / 0722.244.944
vanzari@calpeda.ro | www.calpeda.ro

BS. MXH. VTT2

Pressure boosting sets with two horizontal multi-stage pumps with VARIOMAT 2 frequency converter

Dimensions and weights

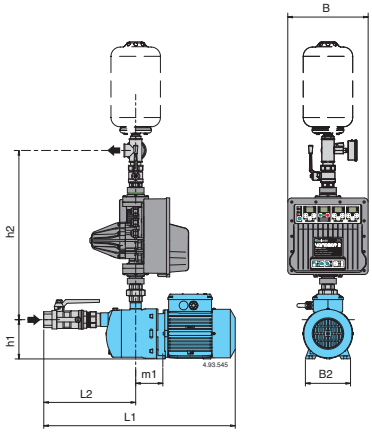

Mains: 3~ 400V Motor: 3~ 400V		P2		Connection		mm							
	A	kW	HP	DN1	DN2	H	h1	h2	L1	L2	m1	B	B2
BS1V 1MXH 203E-VTT2/A	1,4	0,45	0,6	G 1 1/4	G 1	722	127	548	545	305	28	260	210
BS1V 1MXH 204/A-VTT2/A	1,6	0,55	0,75						565	330			
BS1V 1MXH 205/B-VTT2/A	2	0,75	1						590	355			
BS1V 1MXH 206/C-VTT2/A	2,7	1,1	1,5						675	375			
BS1V 1MXH 403/A-VTT2/A	1,6	0,55	0,75	G 1 1/4	G 1	722	127	548	545	305	28	260	210
BS1V 1MXH 404/B-VTT2/A	2	0,75	1						565	330			
BS1V 1MXH 405/C-VTT2/A	2,7	1,1	1,5						615	375			
BS1V 1MXH 406/A-VTT2/A	3,7	1,5	2						675	375			
BS1V 1MXH 803/A-VTT2/A	2,9	1,1	1,5	G 1 1/2	G 1	722	127	548	675	350	31	260	210
BS1V 1MXH 804/A-VTT2/A	3,7	1,5	2						705	380			
BS1V 1MXH 805/B-VTT2/A	4,3	1,8	2,5						735	410			
BS1V 1MXH 1602/A-VTT2/A	3,7	1,5	2	G 2	G 1 1/2	715	117	537	746	410	31	260	210
BS1V 1MXH 1603/B-VTT2/A	4,3	1,8	2,5						746	410			

Dimensions not binding to be verified when ordering

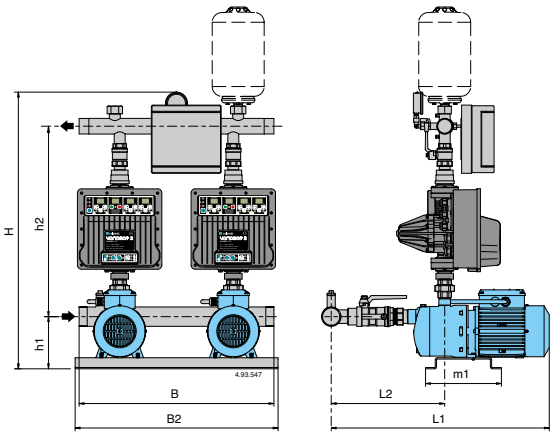

Mains: 3~ 400V Motor: 3~ 400V		P2		Connection		mm							
	A	kW	HP	DN1	DN2	H	h1	h2	L1	L2	m1	B	B2
BS2V 2MXH 203E-VTT2/A	2 x 1,4	2 x 0,45	2 x 0,6	G 2	G 1 1/2	858	162	557	570	330	234	600	625
BS2V 2MXH 204/A-VTT2/A	2 x 1,6	2 x 0,55	2 x 0,75						620	355			
BS2V 2MXH 205/B-VTT2/A	2 x 2	2 x 0,75	2 x 1						645	380			
BS2V 2MXH 206/C-VTT2/A	2 x 2,7	2 x 1,1	2 x 1,5						665	405			
BS2V 2MXH 403/A-VTT2/A	2 x 1,6	2 x 0,55	2 x 0,75	G 2	G 1 1/2	858	162	557	595	330	234	600	625
BS2V 2MXH 404/B-VTT2/A	2 x 2	2 x 0,75	2 x 1						620	355			
BS2V 2MXH 405/C-VTT2/A	2 x 2,7	2 x 1,1	2 x 1,5						645	380			
BS2V 2MXH 406/A-VTT2/A	2 x 3,7	2 x 1,5	2 x 2						725	405			
BS2V 2MXH 803/A-VTT2/A	2 x 2,9	2 x 1,1	2 x 1,5	G 2 1/2	G 2	864	162	563	750	430	234	600	625
BS2V 2MXH 804/A-VTT2/A	2 x 3,7	2 x 1,5	2 x 2						780	460			
BS2V 2MXH 805/B-VTT2/A	2 x 4,3	2 x 1,8	2 x 2,5						810	490			
BS2V 2MXH 1602/A-VTT2/A	2 x 3,7	2 x 1,5	2 x 2	G 3	G 2 1/2	830	152	679	830	495	234	600	625
BS2V 2MXH 1603/B-VTT2/A	2 x 4,3	2 x 1,8	2 x 2,5						830	495			

Dimensions not binding to be verified when ordering

CALPEDA ROMANIA - INFINITY PUMPS SRL
Tel: 0268.33.47.47 / 0722.244.944
vanzari@calpeda.ro | www.calpeda.ro

BS. MXH. ITT

Pressure boosting sets with 2 to 3 horizontal multi-stage pumps with I-MAT frequency converter

Dimensions and weights

BS.. 2MXH 2,4,8

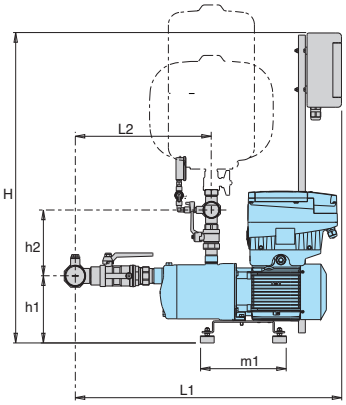

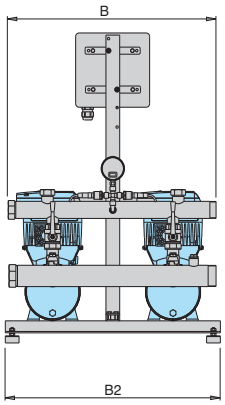

BS.. 2MXH 16

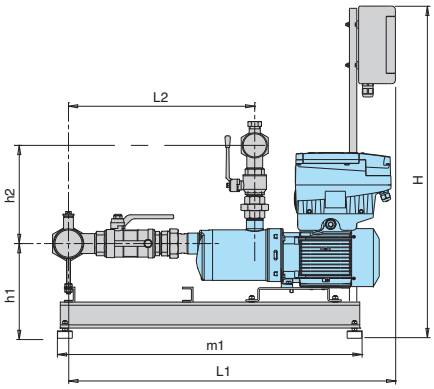

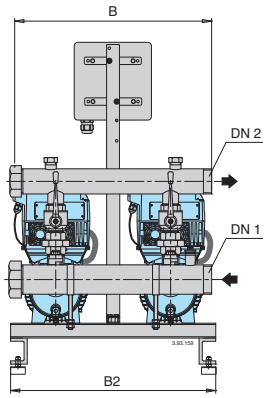

TYPE	Motor			Connection		mm								weight
	kW	HP	A	DN 1	DN 2	H	h1	h2	L1	L2	m1	B2	B	kg
BS2V 2MXH 204/A-ITT	0,55 x2	0,75 x2	1,6 x2	G 2	G 1 1/2	876	190	187	725	347	250	625	600	47
BS2V 2MXH 205/B-ITT	0,75 x2	1 x2	2 x2	G 2	G 1 1/2	876	190	187	749	371				50
BS2V 2MXH 206/C-ITT	1,1 x2	1,5 x2	2,7 x2	G 2	G 1 1/2	876	190	187	773	395				54
BS2V 2MXH 403/A-ITT	0,55 x2	0,75 x2	1,6 x2	G 2	G 1 1/2	876	190	187	701	323				46
BS2V 2MXH 404/B-ITT	0,75 x2	1 x2	2 x2	G 2	G 1 1/2	876	190	187	725	347				49
BS2V 2MXH 405/C-ITT	1,1 x2	1,5 x2	2,7 x2	G 2	G 1 1/2	876	190	187	749	371				53
BS2V 2MXH 406/A-ITT	1,5 x2	2 x2	3,6 x2	G 2	G 1 1/2	876	190	187	773	295				57
BS2V 2MXH 803/A-ITT	1,1 x2	1,5 x2	2,7 x2	G 2 1/2	G 2	876	190	193	764	386				61
BS2V 2MXH 804/A-ITT	1,5 x2	2 x2	3,6 x2	G 2 1/2	G 2	876	190	193	794	416				66
BS2V 2MXH 805/B-ITT	1,8 x2	2,5 x2	4,3 x2	G 2 1/2	G 2	876	190	193	830	446				68
BS2V 2MXH 1603/B-ITT	1,8 x2	2,5 x2	4,3 x2	G 3	G 2 1/2	926	257	284	877	486	870	625	600	87
BS2V 2MXH 1604/A-ITT	3 x2	4 x2	6,6 x2	G 3	G 2 1/2	926	257	284	970	524				114
BS2V 2MXH 1605/B-ITT	3,7 x2	5 x2	9,6 x2	G 3	G 2 1/2	926	257	284	1008	561				122
BS2V 2MXH 1606/B-ITT	4 x2	5,5 x2	9,6 x2	G 3	G 2 1/2	926	257	284	1045	599				124

Dimensions not binding to be verified when ordering

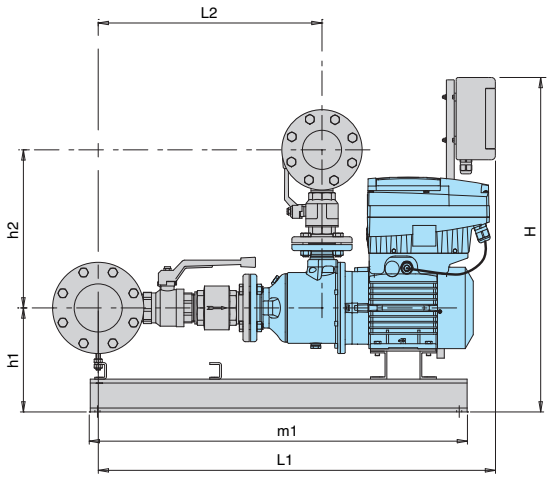

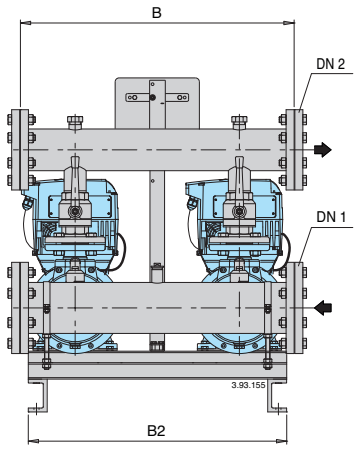

TYPE	Motor			Connection		mm								weight
	kW	HP	A	DN 1	DN 2	H	h1	h2	L1	L2	m1	B2	B	kg
BS2V 2MXH 2001/A-ITT	1,1 x2	1,5 x2	2,7 x2	G 3	G 2 1/2	926	215	354	977	485	870	625	600	
BS2V 2MXH 2002/A-ITT	1,8 x2	2,5 x2	5,3 x2	G 3	G 2 1/2	926	215	354	977	485	870			
BS2V 2MXH 2003-ITT	3 x2	4 x2	6,6 x2	G 3	G 2 1/2	926	225	354	1013	504	870			
BS2V 2MXH 2004/A-ITT	4 x2	5,5 x2	9,6 x2	G 3	G 2 1/2	926	225	354	1048	539	870			
BS2V 2MXH 2005-ITT	5,5 x2	7,5 x2	10,9 x2	G 3	G 2 1/2	926	247	354	1091	573	870			
BS2V 2MXH-F 3201/B-ITT	2,2 x2	3 x2	5,3 x2	100	80	1100	306	429	1164	593	990	750	750	
BS2V 2MXH-F 3202/B-ITT	4 x2	5,5 x2	9,6 x2	100	80	1180	298	429	1180	593	1010			214
BS2V 2MXH-F 3203/A-ITT	5,5 x2	7,5 x2	10,9 x2	100	80	1180	298	429	1274	640	1065			243
BS2V 2MXH-F 3204/A-ITT	7,5 x2	10 x2	14,3 x2	100	80	1180	298	429	1320	685	1110			260
BS2V 2MXH-F 4801/A-ITT	3 x2	4 x2	6,6 x2	125	100	1198	298	468	1250	654	1010			
BS2V 2MXH-F 4802/A-ITT	5,5 x2	7,5 x2	10,9 x2	125	100	1198	298	468	1306	654	1065			268
BS2V 2MXH-F 4803/A-ITT	7,5 x2	10 x2	14,3 x2	125	100	1198	298	468	1367	716	1110			286

Dimensions not binding to be verified when ordering

CALPEDA ROMANIA - INFINITY PUMPS SRL
Tel: 0268.33.47.47 / 0722.244.944
vanzari@calpeda.ro | www.calpeda.ro

BS. MXH. ITT

Pressure boosting sets with 2 to 3 horizontal multi-stage pumps with I-MAT frequency converter

Dimensions and weights

BS.. 3MXH 2,4,8

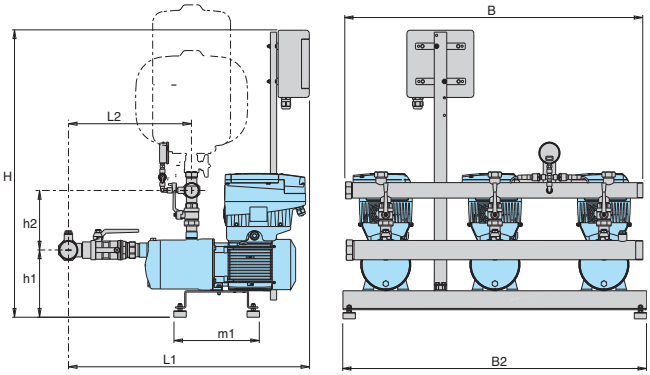

BS.. 3MXH 16

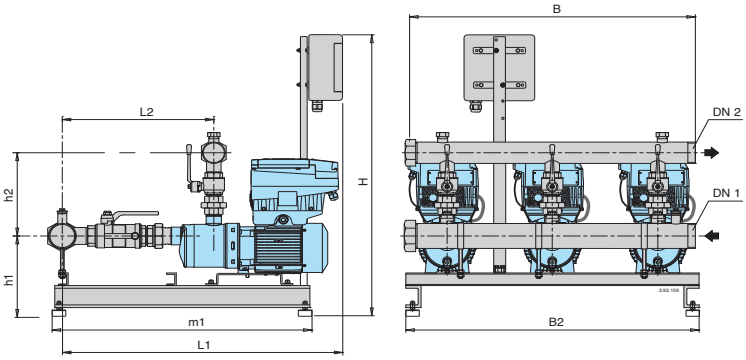

TYPE	Motor			Connection		mm								weight
	kW	HP	A	DN 1	DN 2	H	h1	h2	L1	L2	m1	B2	B	kg
BS3V 3MXH 204/A-ITT	0,55 x3	0,75 x3	1,6 x3	G 2 1/2	G 2	913	227	193	857	356	423	1000	950	-
BS3V 3MXH 205/B-ITT	0,75 x3	1 x3	2 x3	G 2 1/2	G 2	913	227	193	881	380				
BS3V 3MXH 206/C-ITT	1,1 x3	1,5 x3	2,7 x3	G 2 1/2	G 2	913	227	193	905	404				
BS3V 3MXH 403/A-ITT	0,55 x3	0,75 x3	1,6 x3	G 2 1/2	G 2	913	227	193	833	332				
BS3V 3MXH 404/B-ITT	0,75 x3	1 x3	2 x3	G 2 1/2	G 2	913	227	193	857	356				
BS3V 3MXH 405/C-ITT	1,1 x3	1,5 x3	2,7 x3	G 2 1/2	G 2	913	227	193	881	390				
BS3V 3MXH 406/A-ITT	1,5 x3	2 x3	3,6 x3	G 2 1/2	G 2	913	227	193	905	404				
BS3V 3MXH 803/A-ITT	1,1 x3	1,5 x3	2,7 x3	G 3	G 21/2	913	227	193	905	404				
BS3V 3MXH 804/A-ITT	1,5 x3	2 x3	3,6 x3	G 3	G 21/2	913	227	193	933	432				
BS3V 3MXH 805/B-ITT	1,8 x3	2,5 x3	4,3 x3	G 3	G 21/2	913	227	193	950	449				
BS3V 3MXH 1603/B-ITT	1,8 x3	2,5 x3	4,3 x3	DN 100	DN 80	963	227	321	857	500	810	1000	950	
BS3V 3MXH 1604/A-ITT	3 x3	4 x3	6,6 x3	DN 100	DN 80	963	227	321	1008	538				
BS3V 3MXH 1605/B-ITT	3,7 x3	5 x3	9,6 x3	DN 100	DN 80	963	227	321	1045	575				
BS3V 3MXH 1606/B-ITT	4 x3	5,5 x3	9,6 x3	DN 100	DN 80	963	227	321	1083	613				

Dimensions not binding to be verified when ordering

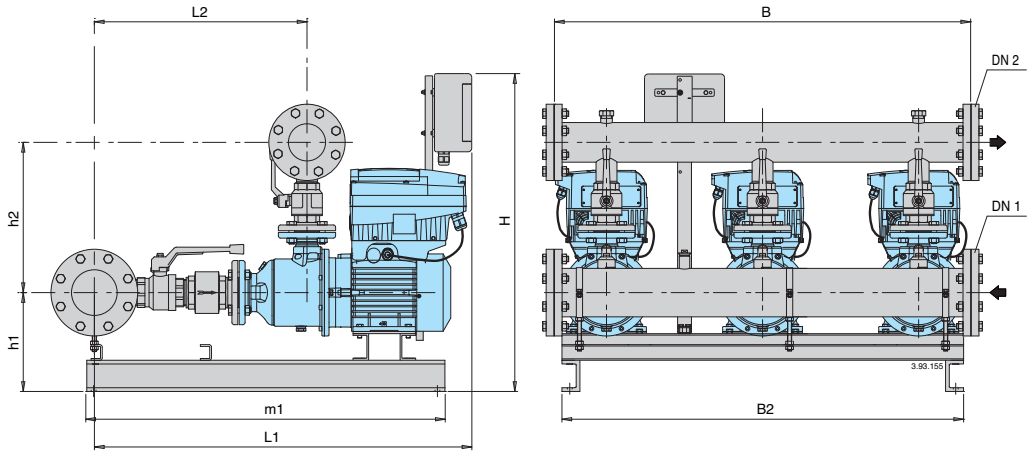

TYPE	Motor			Connection		mm								weight
	kW	HP	A	DN 1	DN 2	H	h1	h2	L1	L2	m1	B2	B	kg
BS3V 3MXH 2001/A-ITT	1,1 x3	1,5 x3	2,7 x3	100	80	963	215	391	991	499	810	1000	950	-
BS3V 3MXH 2002/A-ITT	1,8 x3	2,5 x3	5,3 x3	100	80	963	215	391	991	499	810			
BS3V 3MXH 2003-ITT	3 x3	4 x3	6,6 x3	100	80	963	225	391	1027	518	810			
BS3V 3MXH 2004/A-ITT	4 x3	5,5 x3	9,6 x3	100	80	963	225	391	1062	553	810			
BS3V 3MXH 2005-ITT	5,5 x3	7,5 x3	10,9 x3	100	80	963	247	391	1105	587	995			
BS3V 3MXH-F 3201/B-ITT	2,2 x3	3 x3	5,3 x3	125	100	1100	306	442	1164	593	1010	1200	1200	
BS3V 3MXH-F 3202/B-ITT	4 x3	5,5 x3	9,6 x3	125	100	1180	298	442	1180	593	1065			
BS3V 3MXH-F 3203/A-ITT	5,5 x3	7,5 x3	10,9 x3	125	100	1180	298	442	1274	630	1065			
BS3V 3MXH-F 3204/A-ITT	7,5 x3	10 x3	14,3 x3	125	100	1180	298	442	1320	685	1110			
BS3V 3MXH-F 4801/A-ITT	3 x3	4 x3	6,6 x3	150	125	1198	316	480	1272	668	1010			
BS3V 3MXH-F 4802/A-ITT	5,5 x3	7,5 x3	10,9 x3	150	125	1198	316	480	1320	668	1065			
BS3V 3MXH-F 4803/A-ITT	7,5 x3	10 x3	14,3 x3	150	125	1198	316	480	1381	750	1110			

Dimensions not binding to be verified when ordering

CALPEDA ROMANIA - INFINITY PUMPS SRL
Tel: 0268.33.47.47 / 0722.244.944
vanzari@calpeda.ro | www.calpeda.ro

BS. MXP, MGP

Pressure boosting sets with 1 to 3
Fixed speed pump or Variable speed pump

Coverage chart

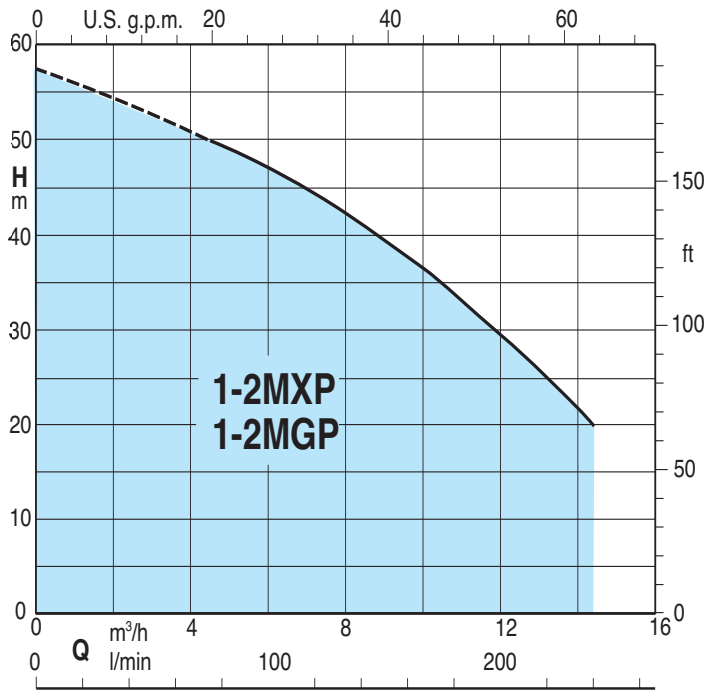

Operation

BS 2F **Pressure boosting sets with 2 fixed speed pump.**
Depending on the reduction of the pressure in the system, the pressure switches determine the starting up of the pumps in sequence and the microprocessor alternates the starts.

BS1-3V **Pressure boosting sets with 1 to 3 variable speed pumps (with EASYMAT).**
Depending on water consumption, one or more pumps are activated, all at variable speed, in order to guarantee the quantity of water required at the set pressure.

BS1V1F **Pressure boosting sets with 1 variable speed pump (with frequency converter into the control panel) and from 1 fixed speed pump**
According to the water consumption, one or more pumps start, one at variable speed and the others at fixed speed, to grant the water quantity required at the set pressure.

BS2V **Pressure boosting sets with two variable speed pumps (with frequency converter into the control panel).**
Depending on water consumption, one or more pumps are activated, all at variable speed, in order to guarantee the quantity of water required at the set pressure.

Construction

- Automatic pressure boosting plant consisting of 1 to 3 horizontal multi-stage pumps complete with ball, non return valve on the suction side and ball valves on the delivery side.

Suction and delivery manifolds for boosting sets with 2,3 pumps:
- stainless steel AISI 304.

Connections are located on the delivery manifold for the installation of vessels G1 connection.

Electrical control boards:
- with microprocessor for fixed speed pump units. Motor starting is D.O.L.
- with frequency converter for variable speed pump units.

The unit includes one pressure gauge and three adjustable differential pressure switches or pressure transducer.

Applications

To supply water in civil and industrial buildings.
As pressure boosting pump to increase water pressure when needed (follow local rules).

Motors

2-pole induction motors, 50 Hz, n ≈ 2900 rpm, suitable for operation with frequency converter.
- Three-phase 230/400V ± 10% up to 3 kW;
  400/690V ± 10% for 4 kW to 7,5 kW;
- Single-phase 230 V ± 10%, with thermal protector.

Insulation class F.
Protection IP 54.
Constructed in accordance with: IEC 60034.
Other voltages and frequencies on request.

Vessels on request

When installing the unit, connect in the delivery section to a diaphragm or galvanised tank.
The recommended sized are shown in the following page.

CALPEDA ROMANIA - INFINITY PUMPS SRL
Tel: 0268.33.47.47 / 0722.244.944
vanzari@calpeda.ro | www.calpeda.ro

BS. 2MGP

Systems with two Multi-Stage stainless steel pumps
Fixed speed pump or Variable speed pump (frequency converter)

Coverage chart

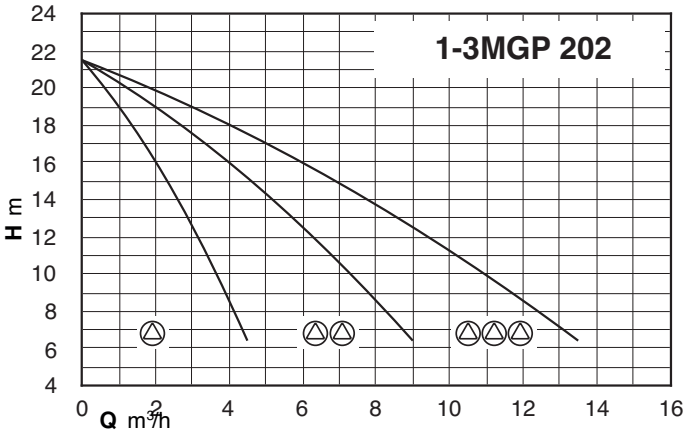

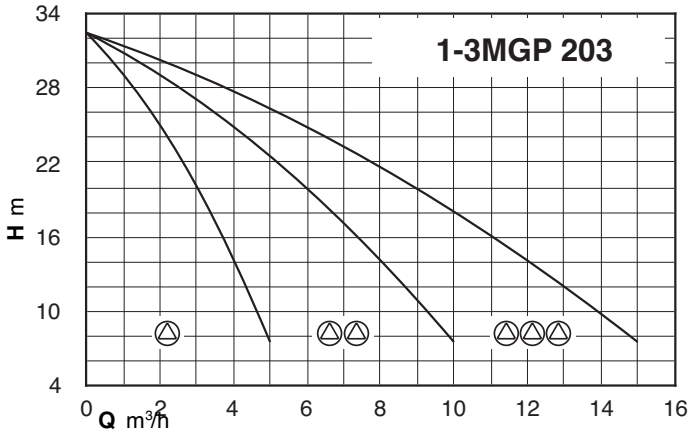

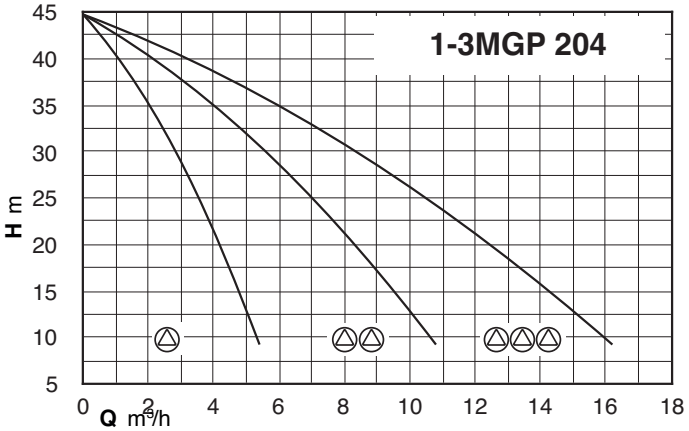

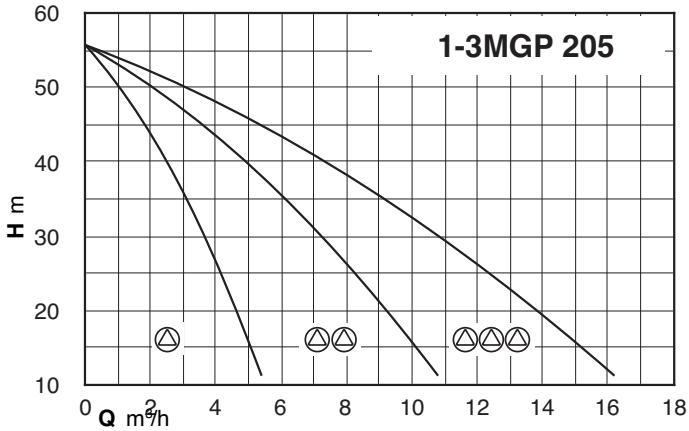

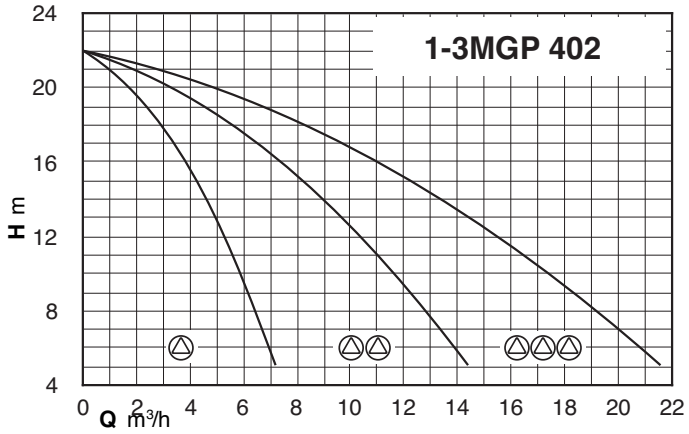

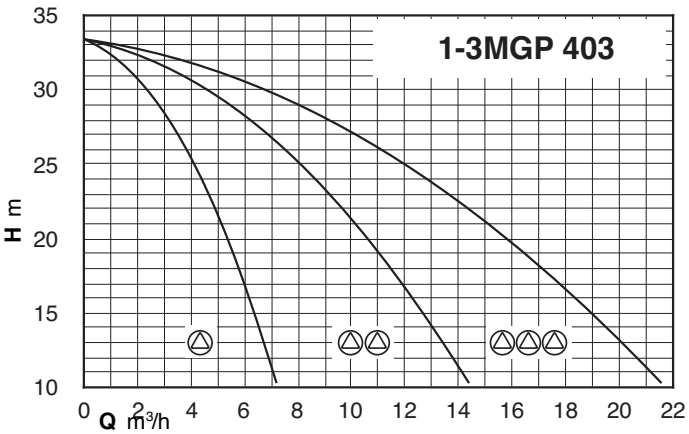

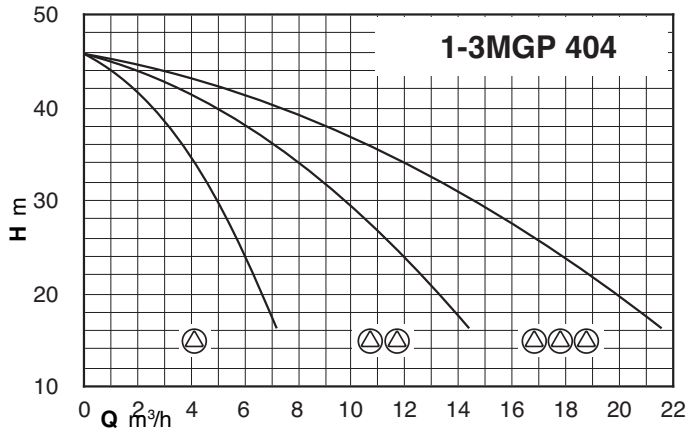

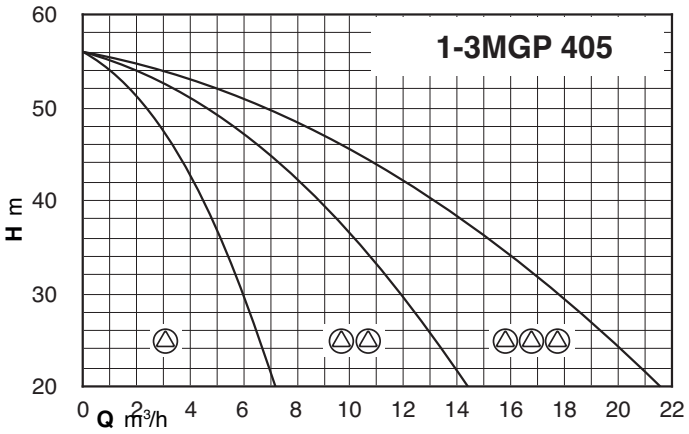

CALPEDA ROMANIA - INFINITY PUMPS SRL
Tel: 0268.33.47.47 / 0722.244.944
vanzari@calpeda.ro | www.calpeda.ro

BS. 2MGP

Systems with two Multi-Stage stainless steel pumps
Fixed speed pump or Variable speed pump (frequency converter)

Characteristic, dimensions and weights

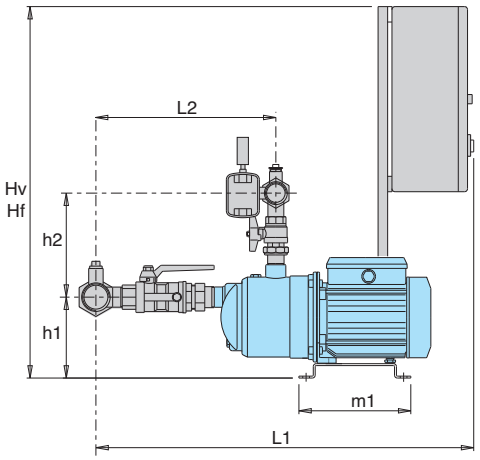

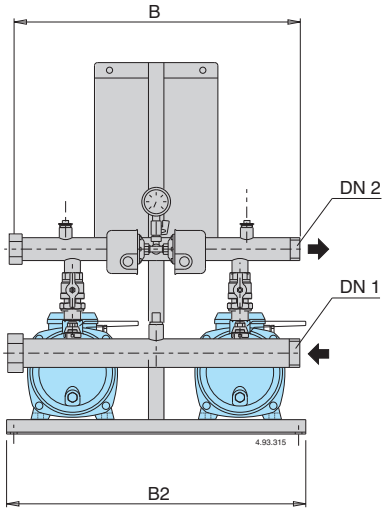

BS2F BSM2F

Mains: 400V 3~ Motor: 400V 3~	Mains: 230V 1~ Motor: 230V 1~	Motor		Q max*	Pres. switch setting		Connection		mm								Weight	Vessel	
		kW	HP	l/min	bar	bar	DN1	DN2	H	h1	h2	L1	L2	m1	B2	B	kg	Mem. litre	Vessel litre
BS2F 2MGP 203	**BSM2F 2MGPM 203**	0,45+0,45	0,6+0,6	155	1,4÷2,6	1,0÷2,2	G 2	G 11/2	840	151	206	793	355	235	625	600	41	24x2	100
BS2F 2MGP 204	**BSM2F 2MGPM 204**	0,55+0,55	0,75+0,75	160	2,0÷3,2	1,5÷2,7	G 2	G 11/2	840	151	206	793	355				46	24x2	100
BS2F 2MGP 205/A	**BSM2F 2MGPM 205**	0,75+0,75	1+1	160	3,0÷4,5	2,5÷4,0	G 2	G 11/2	840	151	206	793	355				52	24x2	100
BS2F 2MGP 403	**BSM2F 2MGPM 403**	0,55+0,55	0,75+0,75	230	1,2÷2,4	0,9÷2,1	G 2	G 11/2	840	151	206	793	355				46	24x2	100
BS2F 2MGP 404/A	**BSM2F 2MGPM 404**	0,75+0,75	1+1	220	2,4÷3,6	2,0÷3,2	G 2	G 11/2	840	151	206	793	355				48	80	200
BS2F 2MGP 405	**BSM2F 2MGPM 405**	1,1+1,1	1,5+1,5	220	3,0÷4,5	2,5÷4,0	G 2	G 11/2	840	151	206	793	355				54	80	200

* Maximum pumps flow at minimum set pressure of 2 nd pressure switch.

BS1V1F BSM1V1F

Mains: 400V 3~ Motor: 400V 3~	Mains: 230V 1~ Motor: 230V 3~ and 230V 1~	Motor		Connection		mm								Weight	Vessel Membrane
		kW	HP	DN1	DN2	H	h1	h2	L1	L2	m1	B2	B	kg	litre
BS1V1F 2MGP 203	**BSM1V1F 2MGP 203**	0,45+0,45	0,6+0,6	G 2	G 11/2	1100	151	206	793	355	235	625	600	41	24x2
BS1V1F 2MGP 204	**BSM1V1F 2MGP 204**	0,55+0,55	0,75+0,75	G 2	G 11/2	1100	151	206	793	355				46	24x2
BS1V1F 2MGP 205/A	**BSM1V1F 2MGP 205**	0,75+0,75	1+1	G 2	G 11/2	1100	151	206	793	355				52	24x2
BS1V1F 2MGP 403	**BSM1V1F 2MGP 403**	0,55+0,55	0,75+0,75	G 2	G 11/2	1100	151	206	793	355				46	24x2
BS1V1F 2MGP 404/A	**BSM1V1F 2MGP 404**	0,75+0,75	1+1	G 2	G 11/2	1100	151	206	793	355				48	24x2
BS1V1F 2MGP 405	**BSM1V1F 2MGP 405**	1,1+1,1	1,5+1,5	G 2	G 11/2	1100	151	206	793	355				54	24x2

BS2V BSM2V

Mains: 400V 3~ Motor: 400V 3~	Mains: 230V 1~ Motor: 230V 3~	Motor		Connection		mm								Weight	Vessel Membrane
		kW	HP	DN1	DN2	H	h1	h2	L1	L2	m1	B2	B	kg	litre
BS2V 2MGP 203	**BSM2V 2MGP 203**	0,45+0,45	0,6+0,6	G 2	G 11/2	1100	151	206	793	355	235	625	600	41	24x2
BS2V 2MGP 204	**BSM2V 2MGP 204**	0,55+0,55	0,75+0,75	G 2	G 11/2	1100	151	206	793	355				46	24x2
BS2V 2MGP 205/A	**BSM2V 2MGP 205**	0,75+0,75	1+1	G 2	G 11/2	1100	151	206	793	355				52	24x2
BS2V 2MGP 403	**BSM2V 2MGP 403**	0,55+0,55	0,75+0,75	G 2	G 11/2	1100	151	206	793	355				46	24x2
BS2V 2MGP 404/A	**BSM2V 2MGP 404**	0,75+0,75	1+1	G 2	G 11/2	1100	151	206	793	355				48	24x2
BS2V 2MGP 405	**BSM2V 2MGP 405**	1,1+1,1	1,5+1,5	G 2	G 11/2	1100	151	206	793	355				54	24x2

Dimensions not binding to be verified when ordering

CALPEDA ROMANIA - INFINITY PUMPS SRL
Tel: 0268.33.47.47 / 0722.244.944
vanzari@calpeda.ro | www.calpeda.ro

BS. MGP. EM

Pressure boosting sets with 1 to 3 horizontal multi-stage pumps with EASYMAT frequency converter

Characteristic, dimensions and weights

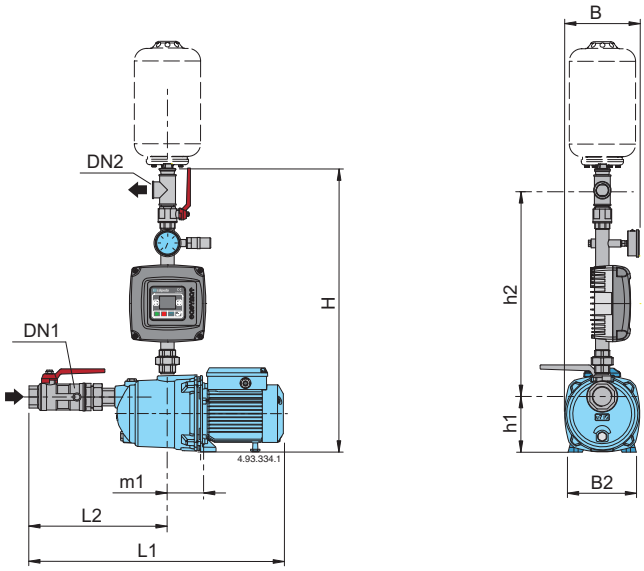

Mains: 1~ 230V Motor: 3~ 230V	mains A	motor A	Mains: 1~ 230V Motor: 1~ 230V	A	P2 kW	P2 HP	Connection DN1	Connection DN2	mm H	h1	h2	L1	L2	m1	B	B2
BSM1V 1MGP 202-EMT	2,1	1,7	BSM1V 1MGPM 202-EMM	2,3	0,33	0,45	G 1	G 1	685	116	504	516	269	95	165	146
BSM1V 1MGP 203-EMT	3,2	2,4	BSM1V 1MGPM 203-EMM	3	0,45	0,6						516				
BSM1V 1MGP 204-EMT	4	2,8	BSM1V 1MGPM 204-EMM	3,3	0,55	0,75						516				
BSM1V 1MGP 205/A-EMT	5	3,5	BSM1V 1MGPM 205-EMM	5,4	0,75	1						545				
BSM1V 1MGP 402-EMT	3,2	2,4	BSM1V 1MGPM 402-EMM	3	0,45	0,6	G 1	G 1	685	116	504	516	269	95	165	146
BSM1V 1MGP 403-EMT	4,3	3	BSM1V 1MGPM 403-EMM	3,5	0,55	0,75						516				
BSM1V 1MGP 404/A-EMT	5	3,5	BSM1V 1MGPM 404-EMM	5,4	0,75	1						545				
BSM1V 1MGP 405-EMT	6,4	4,5	BSM1V 1MGPM 405-EMM	7	1,1	1,5						575				

Dimensions not binding to be verified when ordering

CALPEDA ROMANIA - INFINITY PUMPS SRL
Tel: 0268.33.47.47 / 0722.244.944
vanzari@calpeda.ro | www.calpeda.ro

BS. MGP. EM

Pressure boosting sets with 1 to 3 horizontal multi-stage pumps with EASYMAT frequency converter

Characteristic and dimensions

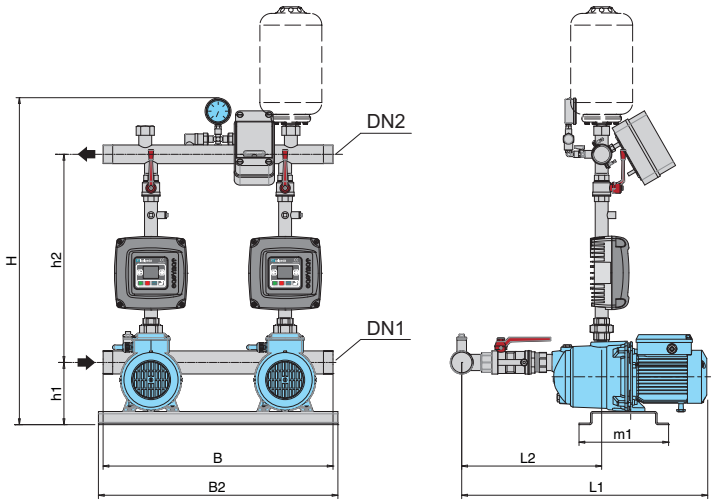

Mains: 1~ 230V Motor: 3~ 230V	mains	motor	P2		Connection		mm							
	A	A	kW	HP	DN1	DN2	H	h1	h2	L1	L2	m1	B	B2
BSM2V 2MGP 202-EMT	2 x 2,1	2 x 1,7	2 x 0,33	2 x 0,45	G 2	G 1 1/2	825	150	494	573	326	240	600	625
BSM2V 2MGP 203-EMT	2 x 3,2	2 x 2,4	2 x 0,45	2 x 0,6						573				
BSM2V 2MGP 204-EMT	2 x 4	2 x 2,8	2 x 0,55	2 x 0,75						573				
BSM2V 2MGP 205/A-EMT	2 x 5	2 x 3,5	2 x 0,75	2 x 1						602				
BSM2V 2MGP 402-EMT	2 x 3,2	2 x 2,4	2 x 0,45	2 x 0,6	G 2	G 1 1/2	825	150	494	573	326	240	600	625
BSM2V 2MGP 403-EMT	2 x 4,3	2 x 3	2 x 0,55	2 x 0,75						573				
BSM2V 2MGP 404/A-EMT	2 x 5	2 x 3,5	2 x 0,75	2 x 1						602				
BSM2V 2MGP 405-EMT	2 x 6,4	2 x 4,5	2 x 1,1	2 x 1,5						632				

Dimensions not binding to be verified when ordering

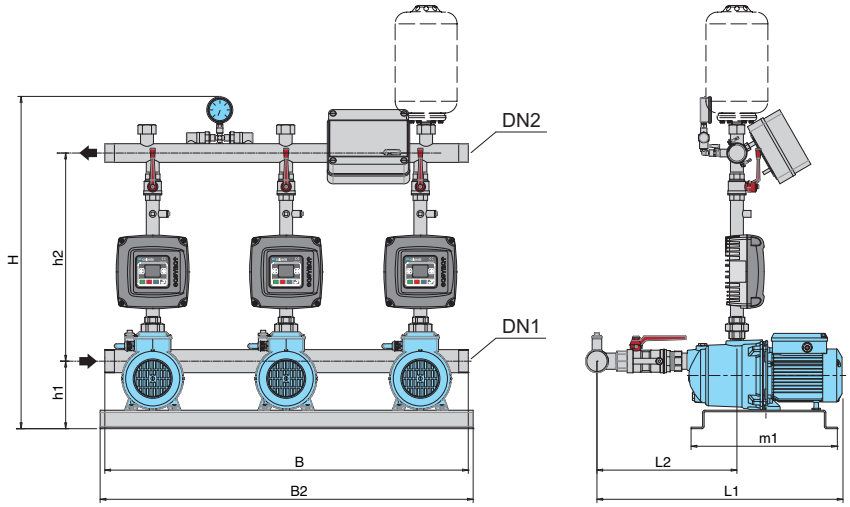

Mains: 1~ 230V Motor: 3~ 230V	mains	motor	P2		Connection		mm							
	A	A	kW	HP	DN1	DN2	H	h1	h2	L1	L2	m1	B	B2
BSM3V 3MGP 202-EMT	3 x 2,1	3 x 1,7	3 x 0,33	3 x 0,45	G 2	G 1 1/2	825	150	494	573	326	240	600	625
BSM3V 3MGP 203-EMT	3 x 3,2	3 x 2,4	3 x 0,45	3 x 0,6						573				
BSM3V 3MGP 204-EMT	3 x 4	3 x 2,8	3 x 0,55	3 x 0,75						573				
BSM3V 3MGP 205/A-EMT	3 x 5	3 x 3,5	3 x 0,75	3 x 1						602				
BSM3V 3MGP 402-EMT	3 x 3,2	3 x 2,4	3 x 0,45	3 x 0,6	G 2	G 1 1/2	825	150	494	573	326	240	600	625
BSM3V 3MGP 403-EMT	3 x 4,3	3 x 3	3 x 0,55	3 x 0,75						573				
BSM3V 3MGP 404/A-EMT	3 x 5	3 x 3,5	3 x 0,75	3 x 1						602				
BSM3V 3MGP 405-EMT	3 x 6,4	3 x 4,5	3 x 1,1	3 x 1,5						632				

Dimensions not binding to be verified when ordering

CALPEDA ROMANIA - INFINITY PUMPS SRL
Tel: 0268.33.47.47 / 0722.244.944
vanzari@calpeda.ro | www.calpeda.ro

BS. 2MXP

Systems with two Multi-Stage stainless steel pumps
Fixed speed pump or Variable speed pump (frequency converter)

Coverage chart

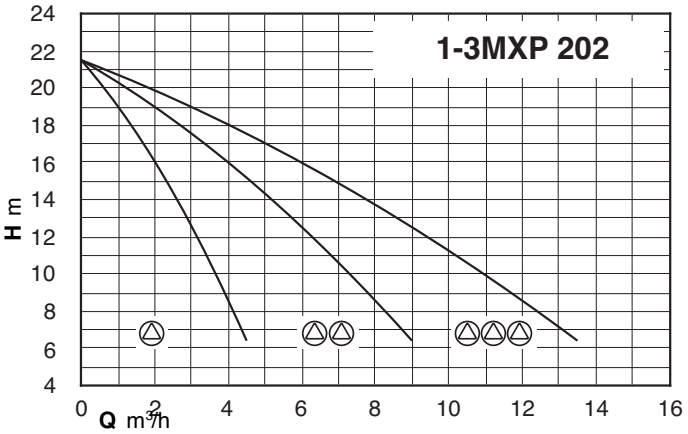

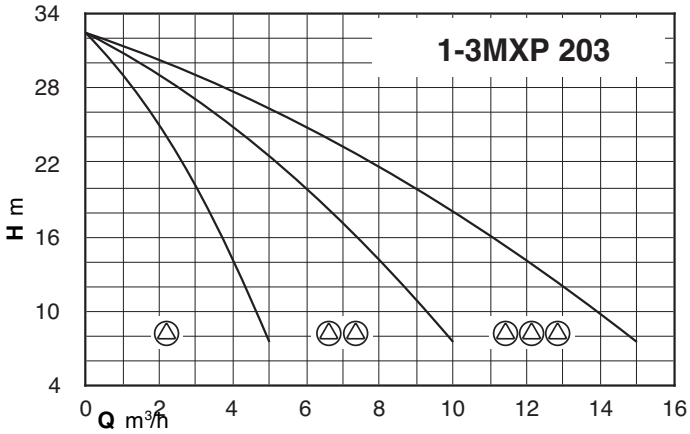

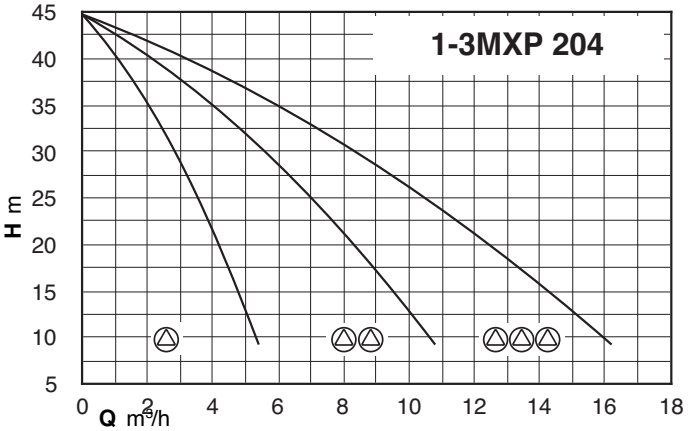

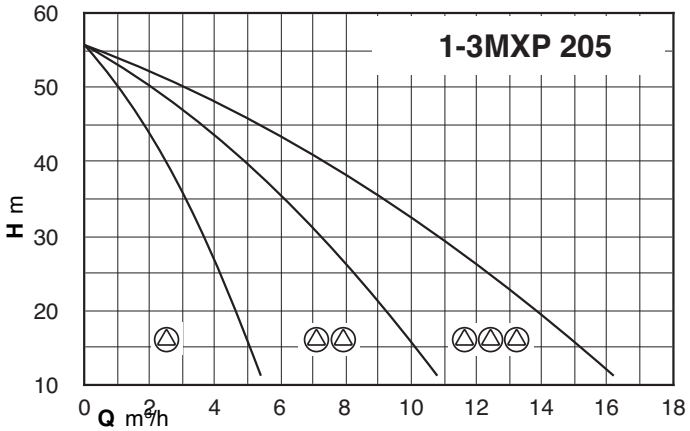

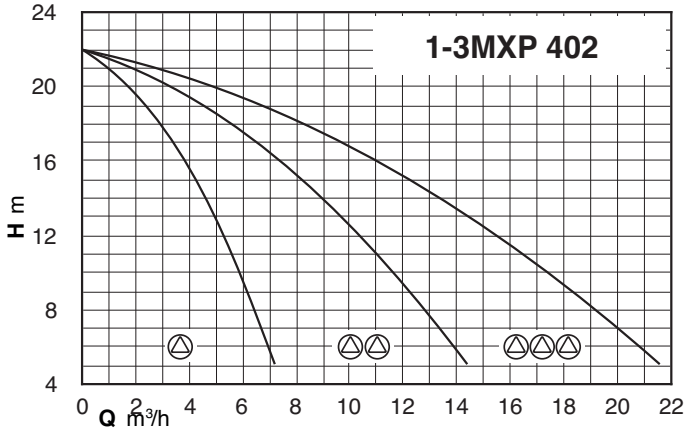

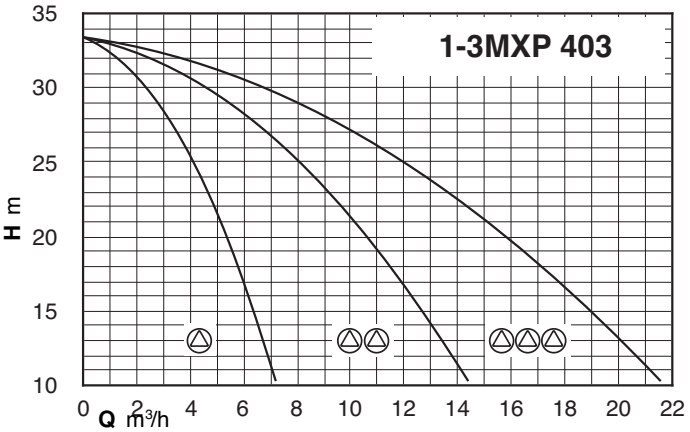

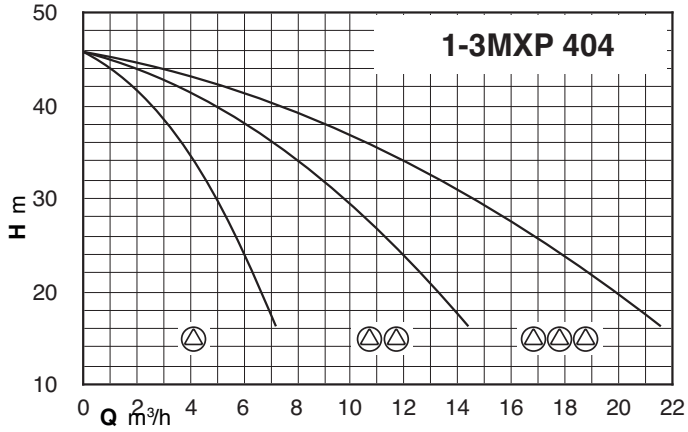

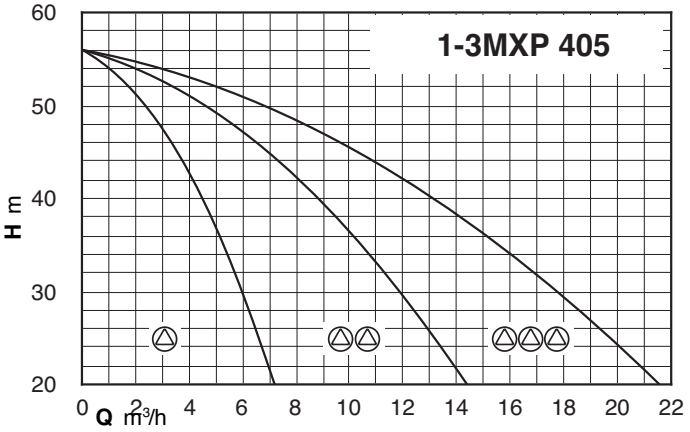

CALPEDA ROMANIA - INFINITY PUMPS SRL
Tel: 0268.33.47.47 / 0722.244.944
vanzari@calpeda.ro | www.calpeda.ro

BS. 2MXP

Systems with two Multi-Stage stainless steel pumps
Fixed speed pump or Variable speed pump (frequency converter)

Characteristic, dimensions and weights

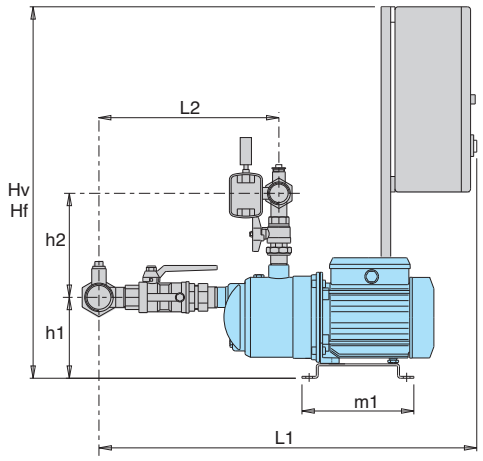

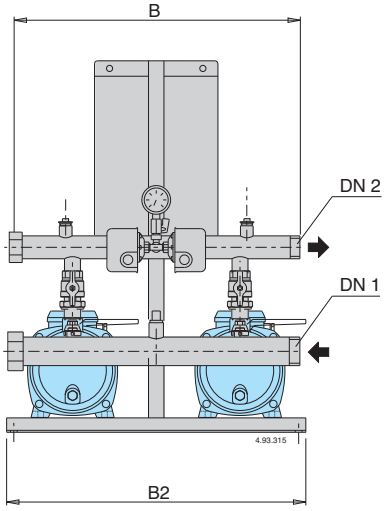

BS2F BSM2F

Mains: 400V 3~ Motor: 400V 3~	Mains: 230V 1~ Motor: 230V 1~	Motor		Q max*	Pres. switch setting		Connection		mm								Weight	Vessel	
		kW	HP	l/min	bar	bar	DN1	DN2	H	h1	h2	L1	L2	m1	B2	B	kg	Mem. litre	Vessel litre
BS2F 2MXP 203	**BSM2F 2MXPM 203**	0,45+0,45	0,6+0,6	155	1,4÷2,6	1,0÷2,2	G 2	G 11/2	840	151	206	793	355	235	625	600	41	24x2	100
BS2F 2MXP 204/A	**BSM2F 2MXPM 204/A**	0,55+0,55	0,75+0,75	160	2,0÷3,2	1,5÷2,7	G 2	G 11/2	840	151	206	793	355				46	24x2	100
BS2F 2MXP 205/A	**BSM2F 2MXPM 205**	0,75+0,75	1+1	160	3,0÷4,5	2,5÷4,0	G 2	G 11/2	840	151	206	793	355				48	24x2	100
BS2F 2MXP 403/A	**BSM2F 2MXPM 403/A**	0,55+0,55	0,75+0,75	230	1,5÷2,7	1,2÷2,4	G 2	G 11/2	840	151	206	793	355				46	24x2	100
BS2F 2MXP 404/B	**BSM2F 2MXPM 404/A**	0,75+0,75	1+1	220	2,4÷3,6	2,0÷3,2	G 2	G 11/2	840	151	206	793	355				48	80	200
BS2F 2MXP 405	**BSM2F 2MXPM 405**	1,1+1,1	1,5+1,5	220	3,0÷4,5	3,5÷4,0	G 2	G 11/2	840	151	206	793	355				54	80	200

* Maximum pumps flow at minimum set pressure of 2 nd pressure switch.

BS1V1F BSM1V1F

Mains: 400V 3~ Motor: 400V 3~	Mains: 230V 1~ Motor: 230V 3~ and 230V 1~	Motor		Connection		mm								Weight	Vessel Membrane
		kW	HP	DN1	DN2	H	h1	h2	L1	L2	m1	B2	B	kg	litre
BS1V1F 2MXP 203	**BSM1V1F 2MXP 203**	0,45+0,45	0,6+0,6	G 2	G 11/2	1100	151	206	793	355	235	625	600	41	24x2
BS1V1F 2MXP 204/A	**BSM1V1F 2MXP 204/A**	0,55+0,55	0,75+0,75	G 2	G 11/2	1100	151	206	793	355				46	24x2
BS1V1F 2MXP 205/A	**BSM1V1F 2MXP 205**	0,75+0,75	1+1	G 2	G 11/2	1100	151	206	793	355				48	24x2
BS1V1F 2MXP 403/A	**BSM1V1F 2MXP 403/A**	0,55+0,55	0,75+0,75	G 2	G 11/2	1100	151	206	793	355				46	24x2
BS1V1F 2MXP 404/B	**BSM1V1F 2MXP 404/A**	0,75+0,75	1+1	G 2	G 11/2	1100	151	206	793	355				48	24x2
BS1V1F 2MXP 405	**BSM1V1F 2MXP 405**	1,1+1,1	1,5+1,5	G 2	G 11/2	1100	151	206	793	355				54	24x2

BS2V BSM2V

Mains: 400V 3~ Motor: 400V 3~	Mains: 230V 1~ Motor: 230V 3~	Motor		Connection		mm								Weight	Vessel Membrane
		kW	HP	DN1	DN2	H	h1	h2	L1	L2	m1	B2	B	kg	litre
BS2V 2MXP 203	**BSM2V 2MXP 203**	0,45+0,45	0,6+0,6	G 2	G 11/2	1100	151	206	793	355	235	625	600	41	24x2
BS2V 2MXP 204/A	**BSM2V 2MXP 204/A**	0,55+0,55	0,75+0,75	G 2	G 11/2	1100	151	206	793	355				46	24x2
BS2V 2MXP 205/A	**BSM2V 2MXP 205**	0,75+0,75	1+1	G 2	G 11/2	1100	151	206	793	355				48	24x2
BS2V 2MXP 403/A	**BSM2V 2MXP 403/A**	0,55+0,55	0,75+0,75	G 2	G 11/2	1100	151	206	793	355				46	24x2
BS2V 2MXP 404/B	**BSM2V 2MXP 404/A**	0,75+0,75	1+1	G 2	G 11/2	1100	151	206	793	355				48	24x2
BS2V 2MXP 405	**BSM2V 2MXP 405**	1,1+1,1	1,5+1,5	G 2	G 11/2	1100	151	206	793	355				54	24x2

Dimensions not binding to be verified when ordering

CALPEDA ROMANIA - INFINITY PUMPS SRL
Tel: 0268.33.47.47 / 0722.244.944
vanzari@calpeda.ro | www.calpeda.ro

BS. MXP. EM

Pressure boosting sets with 1 to 3 horizontal multi-stage pumps with EASYMAT frequency converter

Characteristic, dimensions and weights

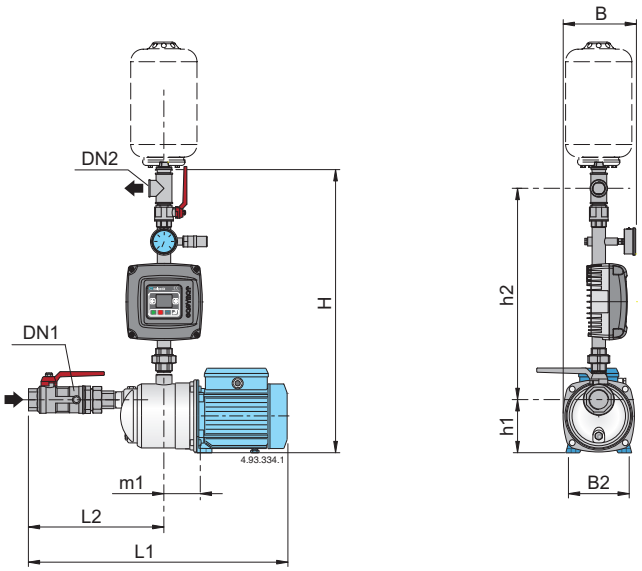

Mains: 1~ 230V Motor: 3~ 230V	mains A	motor A	Mains: 1~ 230V Motor: 1~ 230V	A	P2 kW	P2 HP	Connection DN1	Connection DN2	mm H	h1	h2	L1	L2	m1	B	B2
BSM1V 1MXP 202-EMT	2,1	1,7	BSM1V 1MXPM 202-EMM	2,3	0,33	0,45	G 1	G 1	680	127	495	516	269	95	165	146
BSM1V 1MXP 203-EMT	3,2	2,4	BSM1V 1MXPM 203-EMM	3	0,45	0,6						516				
BSM1V 1MXP 204/A-EMT	4	2,8	BSM1V 1MXPM 204/A-EMM	3,3	0,55	0,75						545				
BSM1V 1MXP 205/A-EMT	5	3,5	BSM1V 1MXPM 205-EMM	5,4	0,75	1						545				
BSM1V 1MXP 402-EMT	3,2	2,4	BSM1V 1MXPM 402-EMM	3	0,45	0,6	G 1	G 1	680	127	495	516	269	95	165	146
BSM1V 1MXP 403/A-EMT	4,3	3	BSM1V 1MXPM 403/A-EMM	3,5	0,55	0,75						545				
BSM1V 1MXP 404/B-EMT	5	3,5	BSM1V 1MXPM 404/A-EMM	5,4	0,75	1						545				
BSM1V 1MXP 405-EMT	6,4	4,5	BSM1V 1MXPM 405-EMM	7	1,1	1,5						575				

Dimensions not binding to be verified when ordering

CALPEDA ROMANIA - INFINITY PUMPS SRL
Tel: 0268.33.47.47 / 0722.244.944
vanzari@calpeda.ro | www.calpeda.ro

BS. MXP. EM

Pressure boosting sets with 1 to 3 horizontal multi-stage pumps with EASYMAT frequency converter

Characteristic and dimensions

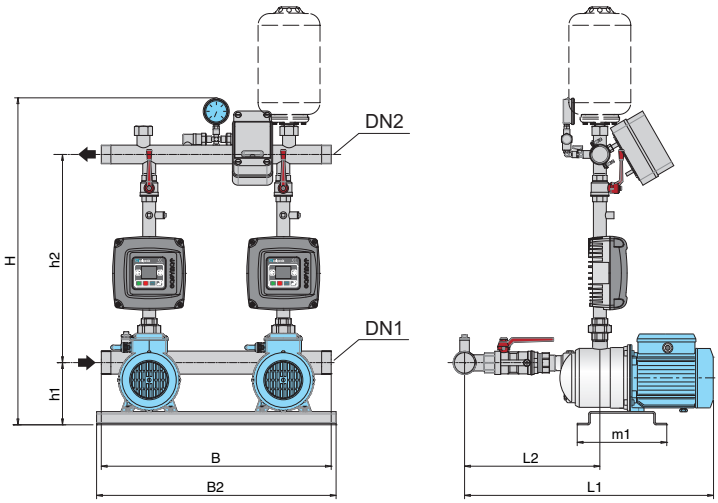

Mains: 1~ 230V Motor: 3~ 230V	mains	motor	P_2		Connection		mm							
	A	A	kW	HP	DN1	DN2	H	h1	h2	L1	L2	m1	B	B2
BSM2V 2MXP 202-EMT	2 x 2,1	2 x 1,7	2 x 0,33	2 x 0,45	G 2	G 1 1/2	841	150	510	573	326	240	600	625
BSM2V 2MXP 203-EMT	2 x 3,2	2 x 2,4	2 x 0,45	2 x 0,6						573				
BSM2V 2MXP 204/A-EMT	2 x 4	2 x 2,8	2 x 0,55	2 x 0,75						602				
BSM2V 2MXP 205/A-EMT	2 x 5	2 x 3,5	2 x 0,75	2 x 1						602				
BSM2V 2MXP 402-EMT	2 x 3,2	2 x 2,4	2 x 0,45	2 x 0,6	G 2	G 1 1/2	841	150	510	573	326	240	600	625
BSM2V 2MXP 403/A-EMT	2 x 4,3	2 x 3	2 x 0,55	2 x 0,75						602				
BSM2V 2MXP 404/B-EMT	2 x 5	2 x 3,5	2 x 0,75	2 x 1						602				
BSM2V 2MXP 405-EMT	2 x 6,4	2 x 4,5	2 x 1,1	2 x 1,5						632				

Dimensions not binding to be verified when ordering

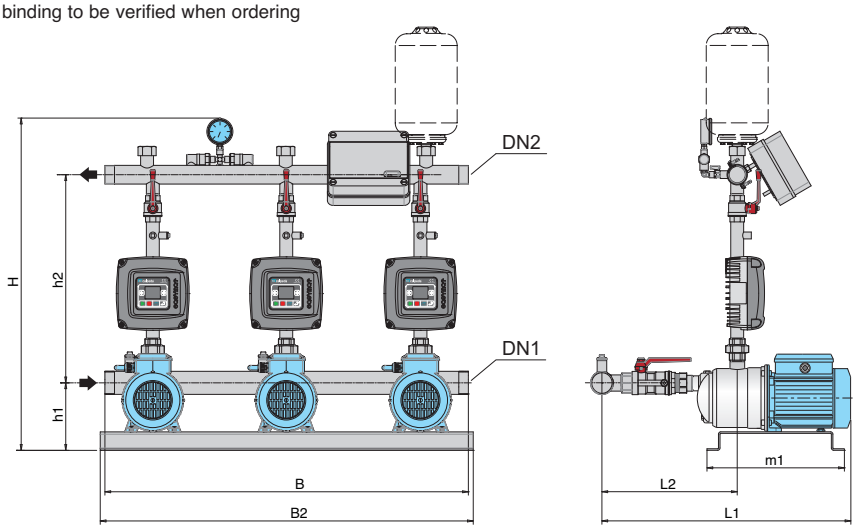

Mains: 1~ 230V Motor: 3~ 230V	mains	motor	P_2		Connection		mm							
	A	A	kW	HP	DN1	DN2	H	h1	h2	L1	L2	m1	B	B2
BSM3V 3MXP 202-EMT	3 x 2,1	3 x 1,7	3 x 0,33	3 x 0,45	G 2	G 1 1/2	841	150	510	573	326	240	600	625
BSM3V 3MXP 203-EMT	3 x 3,2	3 x 2,4	3 x 0,45	3 x 0,6						573				
BSM3V 3MXP 204/A-EMT	3 x 4	3 x 2,8	3 x 0,55	3 x 0,75						602				
BSM3V 3MXP 205/A-EMT	3 x 5	3 x 3,5	3 x 0,75	3 x 1						602				
BSM3V 3MXP 402-EMT	3 x 3,2	3 x 2,4	3 x 0,45	3 x 0,6	G 2	G 1 1/2	841	150	510	573	326	240	600	625
BSM3V 3MXP 403/A-EMT	3 x 4,3	3 x 3	3 x 0,55	3 x 0,75						602				
BSM3V 3MXP 404/B-EMT	3 x 5	3 x 3,5	3 x 0,75	3 x 1						602				
BSM3V 3MXP 405-EMT	3 x 6,4	3 x 4,5	3 x 1,1	3 x 1,5						632				

Dimensions not binding to be verified when ordering

CALPEDA ROMANIA - INFINITY PUMPS SRL
Tel: 0268.33.47.47 / 0722.244.944
vanzari@calpeda.ro | www.calpeda.ro

BS. MPSU

Pressure boosting sets with 1 to 3 Vertical Multi-Stage Pumps
Fixed speed pump or Variable speed pump (frequency converter)

Coverage chart

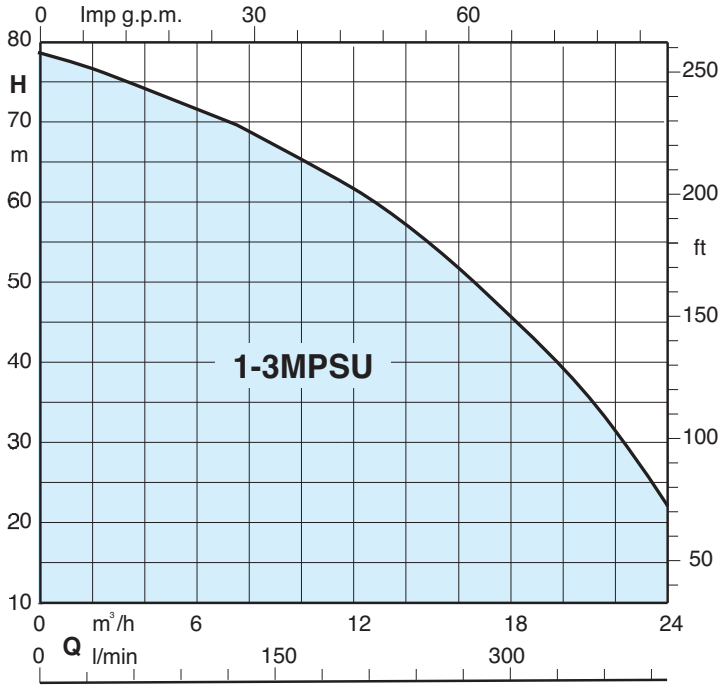

Operation

BS 1-6F **Pressure boosting sets with 1 to 6 fixed speed pump.**
Sets with 4,5 and 6 pumps on request.
Depending on the reduction of the pressure in the system, the pressure switches determine the starting up of the pumps in sequence and the microprocessor alternates the starts.

BS1-3V **Pressure boosting sets with 1 to 3 variable speed pumps (with EASYMAT).**
Depending on water consumption, one or more pumps are activated, all at variable speed, in order to guarantee the quantity of water required at the set pressure.

BS1V2-5F **Pressure boosting sets with 1 variable speed pump (with frequency converter into the control panel) and from 1 to 5 fixed speed pumps**
Sets with 4,5 and 6 pumps on request.
According to the water consumption, one or more pumps start, one at variable speed and the others at fixed speed, to grant the water quantity required at the set pressure.

BS1-6V **Pressure boosting sets with 1 to 6 variable speed pumps (with frequency converter into the control panel).**
Sets with 4,5 and 6 pumps on request.
Depending on water consumption, one or more pumps are activated, all at variable speed, in order to guarantee the quantity of water required at the set pressure.

Construction

- Automatic pressure boosting plant consisting of 1 to 6 vertical multi-stage close coupled pumps complete with ball, non return valve on the suction side and ball valves on the delivery side.

Suction and delivery manifolds for boosting sets with 2,3 pumps:
- stainless steel AISI 304.
Connections are located on the delivery manifold for the installation of vessels G1 connection.

Electrical control boards:
- with microprocessor for fixed speed pump units.
- with frequency converter for variable speed pump units.

The unit includes one pressure gauge and three adjustable differential pressure switches or pressure transducer.

Applications

To supply water in civil and industrial buildings.
As pressure boosting pump to increase water pressure when needed (follow local rules).

Motors

2-pole induction motors, 50 Hz, n ≈ 2900 rpm, suitable for operation with frequency converter.
- Three-phase 230V - 400V ± 10%;
- Single-phase 230 V ± 10%.
Insulation class F.
Protection IP 68.
Constructed in accordance with: IEC 60034.
Other voltages and frequencies on request.

Vessels on request

When installing the unit, connect in the delivery section to a diaphragm or galvanised tank.
The recommended sized are shown in the following page.

Special features on request

Pressure boosting sets with 4,5 and 6 pumps.

CALPEDA ROMANIA - INFINITY PUMPS SRL
Tel: 0268.33.47.47 / 0722.244.944
vanzari@calpeda.ro | www.calpeda.ro

BS. MPSU

Pressure boosting sets with 1 to 3 Vertical Multi-Stage Pumps
Fixed speed pump or Variable speed pump (frequency converter)

Coverage chart

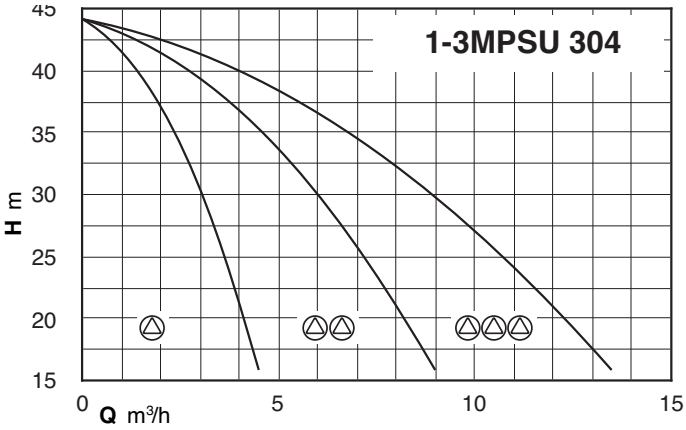

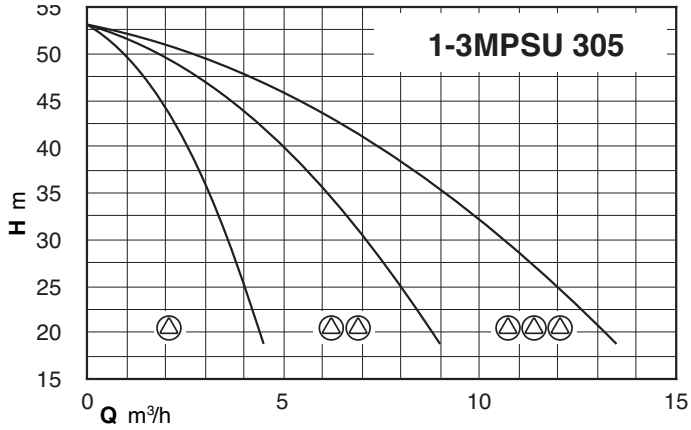

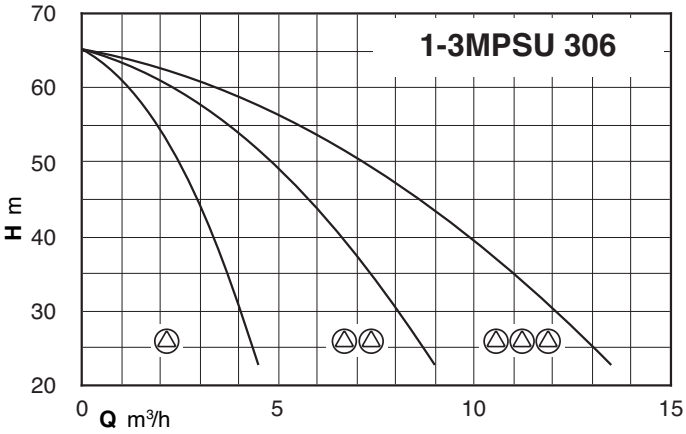

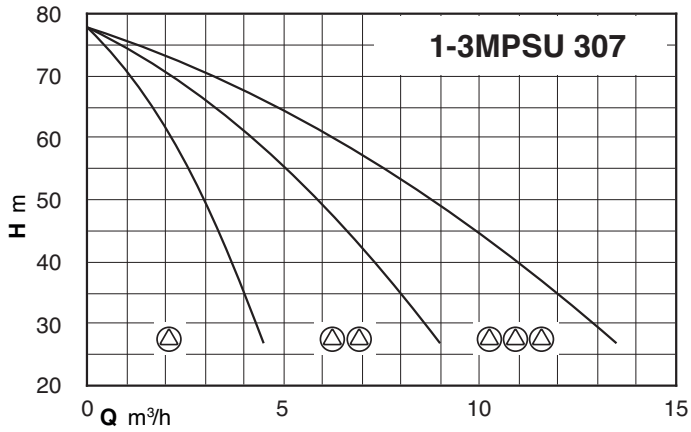

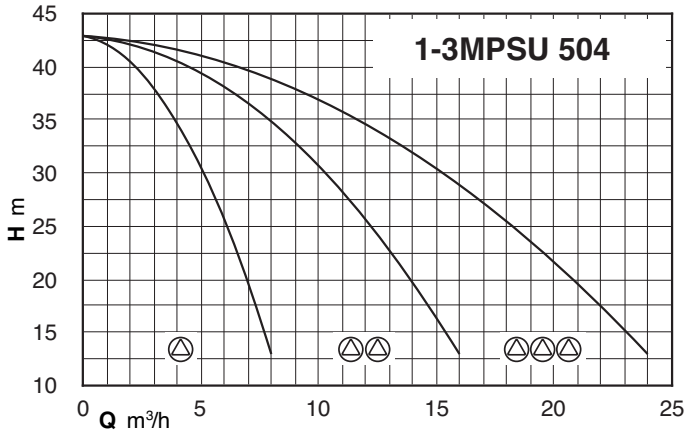

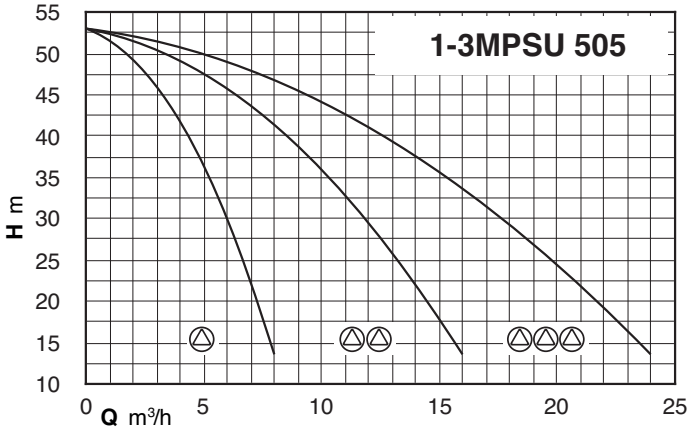

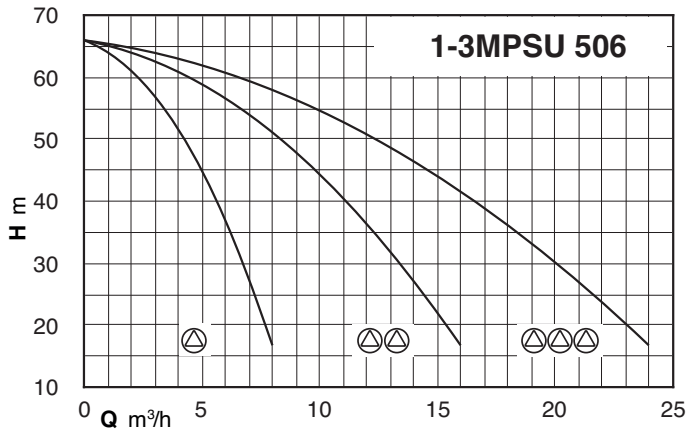

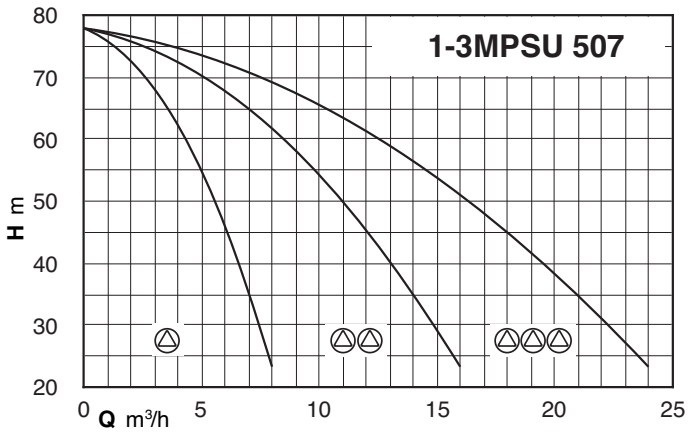

CALPEDA ROMANIA - INFINITY PUMPS SRL
Tel: 0268.33.47.47 / 0722.244.944
vanzari@calpeda.ro | www.calpeda.ro

BS. MPSU

Pressure boosting sets with 1 to 3 Vertical Multi-Stage Pumps
Fixed speed pump or Variable speed pump (frequency converter)

Performance

BS1F BSM1F

Mains: 400V 3~ Motor: 400V 3~	Mains: 230V 1~ Motor: 230V 1~	Motor		Pres. switch 1 bar		Maximum capacity *		Vessel Membrane	Vessel
		kW	HP	min	max	Q l/min	H m	litre	litre
BS1F 1MPSU 304	**BSM1F 1MPSUM 304**	0,55	0,75	2,3	3,8	63	23	40	100
BS1F 1MPSU 305	**BSM1F 1MPSUM 305**	0,75	1	3	4,5	58	31	40	100
BS1F 1MPSU 306	**BSM1F 1MPSUM 306**	0,9	1,2	3,8	5,8	56	39	50	100
BS1F 1MPSU 307	**BSM1F 1MPSUM 307**	0,9	1,2	4,7	6,4	52	48	50	100
BS1F 1MPSU 504	**BSM1F 1MPSUM 504**	0,9	1,2	2,1	3,6	115	21	60	100
BS1F 1MPSU 505	**BSM1F 1MPSUM 505**	1,1	1,5	3	4,5	104	31	80	200
BS1F 1MPSU 506	**BSM1F 1MPSUM 506**	1,1	1,5	4,3	6	85	44	150	200
BS1F 1MPSU 507	**BSM1F 1MPSUM 507**	1,5	2	5,3	7,1	84	54	150	200

* Maximum pumps flow at minimum setting pressure switch.

BS2F BSM2F

Mains: 400V 3~ Motor: 400V 3~	Alimentazione 230V 1~ Motore 230V 1~	Motor		Pres. switch 1 bar		Pres. switch 2 bar		Maximum capacity *		Vessel Membrane	Vessel
		kW	HP	min	max	min	max	Q l/min	H m	litre	litre
BS2F 2MPSU 304	**BSM2F 2MPSUM 304**	0,55 x2	0,75 x2	2,3	3,8	1,8	3,3	143	18	40	100
BS2F 2MPSU 305	**BSM2F 2MPSUM 305**	0,75 x2	1 x2	3	4,5	2,5	4	133	25	40	100
BS2F 2MPSU 306	**BSM2F 2MPSUM 306**	0,9 x2	1,2 x2	3,8	5,8	3,5	5,5	121	36	50	100
BS2F 2MPSU 307	**BSM2F 2MPSUM 307**	0,9 x2	1,2 x2	4,7	6,4	4,4	6,1	110	45	50	100
BS2F 2MPSU 504	**BSM2F 2MPSUM 504**	0,9 x2	1,2 x2	2,1	3,6	1,7	3,2	251	17	60	100
BS2F 2MPSU 505	**BSM2F 2MPSUM 505**	1,1 x2	1,5 x2	3	4,5	2,5	4	233	25	80	200
BS2F 2MPSU 506	**BSM2F 2MPSUM 506**	1,1 x2	1,5 x2	4,3	6	4,1	5,7	180	41	150	200
BS2F 2MPSU 507	**BSM2F 2MPSUM 507**	1,5 x2	2 x2	5,3	7,1	5	6,8	178	51	150	200

* Maximum pumps flow at minimum setting pressure of 2 nd pressure switch.

BS3F

Mains: 400V 3~ Motor: 400V 3~	Motor		Pres. switch 1 bar		Pres. switch 2 bar		Pres. switch 3 bar		Maximum capacity *		Vessel Membrane	Vessel
	kW	HP	min	max	min	max	min	max	Q l/min	H m	litre	litre
BS3F 3MPSU 304	0,55 x3	0,75 x3	2,3	3,8	1,8	3,3	1,3	2,8	235	13	40	100
BS3F 3MPSU 305	0,75 x3	1 x3	3	4,5	2,5	4	2	3,5	220	20	40	100
BS3F 3MPSU 306	0,9 x3	1,2 x3	3,8	5,8	3,5	5,5	3,2	5,2	194	33	40	100
BS3F 3MPSU 307	0,9 x3	1,2 x3	4,7	6,4	4,4	6,1	4,2	5,8	175	42	50	100
BS3F 3MPSU 504	0,9 x3	1,2 x3	2,1	3,6	1,7	3,2	1,2	2,7	403	12	60	100
BS3F 3MPSU 505	1,1 x3	1,5 x3	3	4,5	2,5	4	2	3,5	379	20	80	200
BS3F 3MPSU 506	1,1 x3	1,5 x3	4,3	6	4,1	5,7	3,5	5,4	284	39	150	200
BS3F 3MPSU 507	1,5 x3	2 x3	5,3	7,1	5	6,8	4,8	6,5	279	48	150	200

* Maximum pumps flow at minimum setting pressure of 3 nd pressure switch.

BS..

PUMPS Nos						PUMP TYPE	P_2 For each pump	
1	2	3	4	5	6		kW	HP
BS1V	BS2V BS1V1F BSM1V1F* BSM2V**	BS3V BS1V2F	BS4V BS1V3F	BS5V BS1V4F	BS6V BS1V5F	**MPSU 304**	0,55	0,75
						MPSU 305	0,75	1
						MPSU 306	0,9	1,2
						MPSU 307	0,9	1,2
						MPSU 504	0,9	1,2
						MPSU 505	1,1	1,5
						MPSU 506	1,1	1,5
						MPSU 507	1,5	2

(*) SYSTEMS WITH:
1 variable speed pump three-phase motor
1 fixed speed pump single-phase motor
Power supply to control panel 230 V single-phase

BS.. ..-EMT, EMM

PUMPS Nos			PUMP TYPE	P_2 For each pump	
1	2	3		kW	HP
BS1V -EMT -EMM	BS2V -EMT	BS3V -EMT	**MPSU 304-EMT**	0,55	0,75
			MPSU 305-EMT	0,75	1
			MPSU 306-EMT	0,9	1,2
			MPSU 307-EMT	0,9	1,2
			MPSU 504-EMT	0,9	1,2
			MPSU 505-EMT	1,1	1,5
			MPSU 506-EMT	1,1	1,5
			MPSU 507-EMT	1,5	2

(**) Three-phase motor 230 V.
Power supply to control panel: - 230 V three-phase
- 230 V single-phase
Frequency converter output is alwais 230 V three-phase.

CALPEDA ROMANIA - INFINITY PUMPS SRL
Tel: 0268.33.47.47 / 0722.244.944
vanzari@calpeda.ro | www.calpeda.ro

BS. MPSU

Pressure boosting sets with 1 to 3 Vertical Multi-Stage Pumps
Fixed speed pump or Variable speed pump (frequency converter)

Dimensions and weights

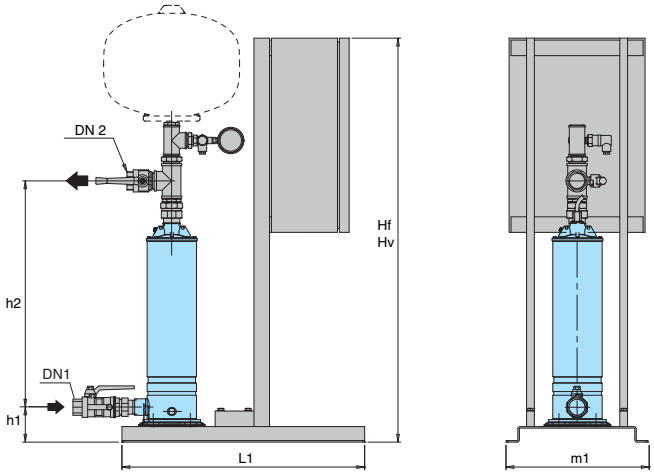

TYPE	TYPE	Connection		mm						weight
		DN 1	DN 2	Hf	Hv	h1	h2	L1	m1	kg
BS1. 1MPSU 304	**BSM1. 1MPSUM 304**	G 1 1/4	G 1 1/4	875	1045	94	619	625	365	-
BS1. 1MPSU 305	**BSM1. 1MPSUM 305**						668			
BS1. 1MPSU 306	**BSM1. 1MPSUM 306**						692			
BS1. 1MPSU 307	**BSM1. 1MPSUM 307**						716			
BS1. 1MPSU 504	**BSM1. 1MPSUM 504**						644			
BS1. 1MPSU 505	**BSM1. 1MPSUM 505**						668			
BS1. 1MPSU 506	**BSM1. 1MPSUM 506**						737			
BS1. 1MPSU 507	**BSM1. 1MPSUM 507**						786			

Dimensions not binding to be verified when ordering

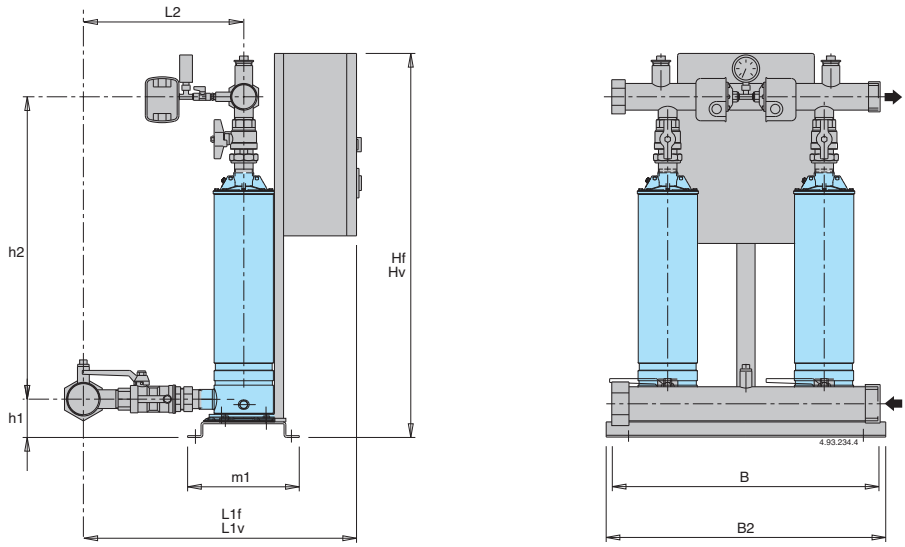

TYPE	TYPE	Connection		mm										weight
		DN 1	DN 2	Hf	Hv	h1	h2	L1f	L1v	L2	m1	B	B2	kg
BS.. 2MPSU 304	**BSM.. 2MPSUM 304**	G 2	G 2	865	1135	84	629	690	740	320	240	600	625	50 - 50
BS.. 2MPSU 305	**BSM.. 2MPSUM 305**						698							52 - 52
BS.. 2MPSU 306	**BSM.. 2MPSUM 306**						722							54 - 55
BS.. 2MPSU 307	**BSM.. 2MPSUM 307**						746							56 - 58
BS.. 2MPSU 504	**BSM.. 2MPSUM 504**						674							52 - 52
BS.. 2MPSU 505	**BSM.. 2MPSUM 505**						698							54 - 54
BS.. 2MPSU 506	**BSM.. 2MPSUM 506**						767							56 - 57
BS.. 2MPSU 507	**BSM.. 2MPSUM 507**						816							58 - 60

Dimensions not binding to be verified when ordering

CALPEDA ROMANIA - INFINITY PUMPS SRL
Tel: 0268.33.47.47 / 0722.244.944
vanzari@calpeda.ro | www.calpeda.ro

BS. MPSU

Pressure boosting sets with 1 to 3 Vertical Multi-Stage Pumps
Fixed speed pump or Variable speed pump (frequency converter)

Dimensions and weights

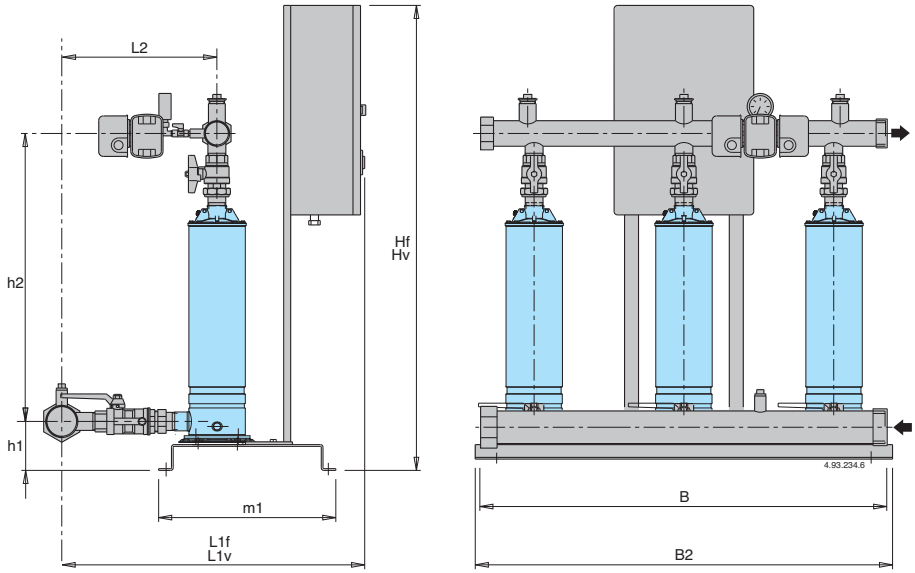

TYPE	Connection		mm										weight
	DN 1	DN 2	Hf	Hv	h1	h2	L1f	L1v	L2	m1	B	B2	kg
BS.. 3MPSU 304	G 2 1/2	G 2	1090	1260	105	636	735	805	329	406	950	1000	85
BS.. 3MPSU 305						705							88
BS.. 3MPSU 306						729							91
BS.. 3MPSU 307						753							94
BS.. 3MPSU 504						681							87
BS.. 3MPSU 505						705							90
BS.. 3MPSU 506						774							93
BS.. 3MPSU 507						823							96

Dimensions not binding to be verified when ordering

CALPEDA ROMANIA - INFINITY PUMPS SRL
Tel: 0268.33.47.47 / 0722.244.944
vanzari@calpeda.ro | www.calpeda.ro

BS. MPSU. EM

Pressure boosting sets with 1 to 3 vertical multi-stage pumps with EASYMAT frequency converter

Characteristic and dimensions

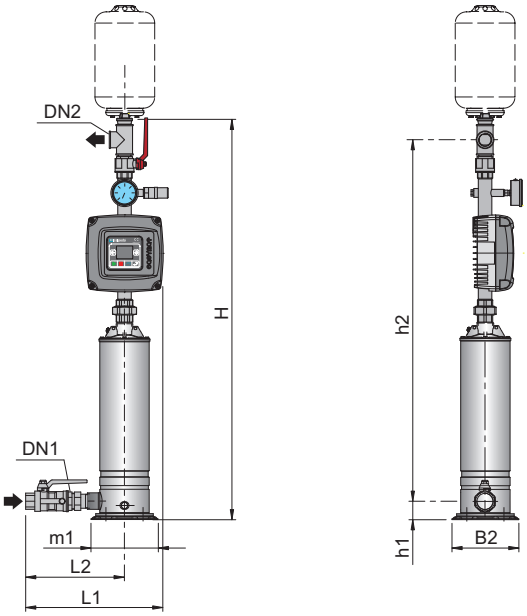

Mains: 1~ 230V Motor: 3~ 230V	mains	motor	Mains: 1~ 230V Motor: 1~ 230V		P2		Connection		mm						
	A	A		A	kW	HP	DN1	DN2	H	h1	h2	L1	L2	m1	B2
BSM1V 1MPSU 304-EMT	3,9	2,8	BSM1V 1MPSUM 304-EMM	4,1	0,55	0,75	G 1 1/4	1 1/4	1055	50	952	376	286	180	205
BSM1V 1MPSU 305-EMT	4,7	3,3	BSM1V 1MPSUM 305-EMM	5	0,75	1			1124		1021				
BSM1V 1MPSU 306-EMT	5,4	3,8	BSM1V 1MPSUM 306-EMM	6	0,9	1,2			1148		1045				
BSM1V 1MPSU 307-EMT	6,4	4,5	BSM1V 1MPSUM 307-EMM	6,6	0,9	1,2			1172		1069				
BSM1V 1MPSU 504-EMT	6,4	3,8	BSM1V 1MPSUM 504-EMM	6	0,9	1,2	G 1 1/4	G 1 1/4	1100	50	997	376	286	180	205
BSM1V 1MPSU 505-EMT	6,4	4,5	BSM1V 1MPSUM 505-EMM	7	1,1	1,5			1124		1021				
BSM1V 1MPSU 506-EMT	6,9	4,8			1,1	1,5			1193		1090				
BSM1V 1MPSU 507-EMT	9,7	6,8			1,5	2			1142		1139				

Dimensions not binding to be verified when ordering

CALPEDA ROMANIA - INFINITY PUMPS SRL
Tel: 0268.33.47.47 / 0722.244.944
vanzari@calpeda.ro | www.calpeda.ro

BS. MPSU. EM

Pressure boosting sets with 1 to 3 vertical multi-stage pumps with EASYMAT frequency converter

Characteristic and dimensions

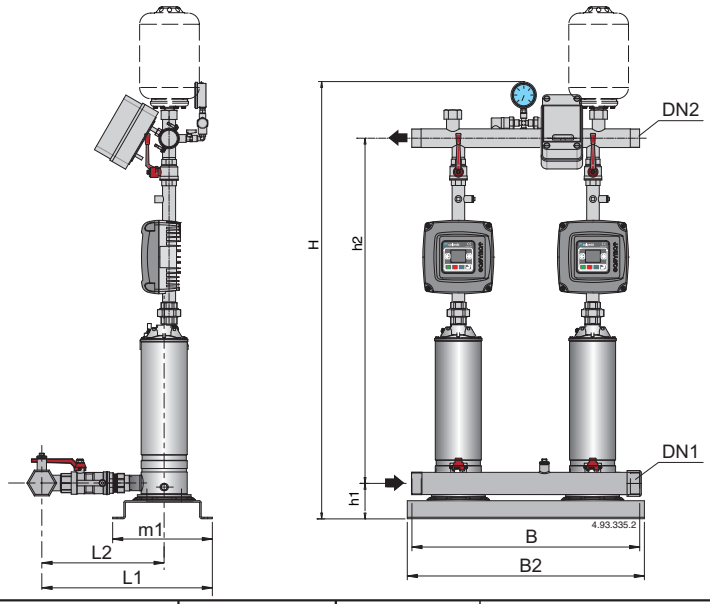

Mains: 1~ 230V Motor: 3~ 230V	mains A	motor A	P2 kW	P2 HP	Connection DN1	Connection DN2	mm H	mm h1	mm h2	mm L1	mm L2	mm m1	mm B	mm B2
BSM2V 2MPSU 304-EMT	2 x 3,9	2 x 2,8	2 x 0,55	2 x 0,75	G 2	G 2	1130	84	932	420	320	240	600	625
BSM2V 2MPSU 305-EMT	2 x 4,7	2 x 3,3	2 x 0,75	2 x 1			1199		1001					
BSM2V 2MPSU 306-EMT	2 x 5,4	2 x 3,8	2 x 0,9	2 x 1,2			1223		1025					
BSM2V 2MPSU 307-EMT	2 x 6,4	2 x 4,5	2 x 0,9	2 x 1,2			1247		1049					
BSM2V 2MPSU 504-EMT	2 x 6,4	2 x 3,8	2 x 0,9	2 x 1,2	G 2	G 2	1175	84	977	420	320	240	600	625
BSM2V 2MPSU 505-EMT	2 x 6,4	2 x 4,5	2 x 1,1	2 x 1,5			1199		1001					
BSM2V 2MPSU 506-EMT	2 x 6,9	2 x 4,8	2 x 1,1	2 x 1,5			1268		1070					
BSM2V 2MPSU 507-EMT	2 x 9,7	2 x 6,8	2 x 1,5	2 x 2			1317		1119					

Dimensions not binding to be verified when ordering

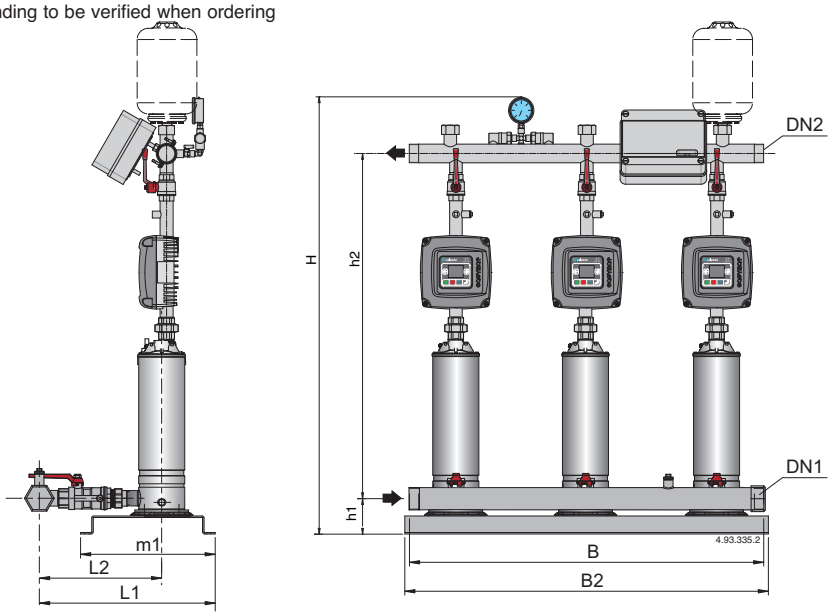

Mains: 1~ 230V Motor: 3~ 230V	mains A	motor A	P2 kW	P2 HP	Connection DN1	Connection DN2	mm H	mm h1	mm h2	mm L1	mm L2	mm m1	mm B	mm B2
BSM3V 3MPSU 304-EMT	3 x 3,9	3 x 2,8	3 x 0,55	3 x 0,75	G 2 1/2	G 2	1151	105	953	566	329	406	950	1000
BSM3V 3MPSU 305-EMT	3 x 4,7	3 x 3,3	3 x 0,75	3 x 1			1120		1022					
BSM3V 3MPSU 306-EMT	3 x 5,4	3 x 3,8	3 x 0,9	3 x 1,2			1244		1046					
BSM3V 3MPSU 307-EMT	3 x 6,4	3 x 4,5	3 x 0,9	3 x 1,2			1268		1070					
BSM3V 3MPSU 504-EMT	3 x 6,4	3 x 3,8	3 x 0,9	3 x 1,2	G 2 1/2	G 2	1196	105	998	566	329	406	950	1000
BSM3V 3MPSU 505-EMT	3 x 6,4	3 x 4,5	3 x 1,1	3 x 1,5			1220		1022					
BSM3V 3MPSU 506-EMT	3 x 6,9	3 x 4,8	3 x 1,1	3 x 1,5			1286		1091					
BSM3V 3MPSU 507-EMT	3 x 9,7	3 x 6,8	3 x 1,5	3 x 2			1338		1140					

Dimensions not binding to be verified when ordering

CALPEDA ROMANIA - INFINITY PUMPS SRL
Tel: 0268.33.47.47 / 0722.244.944
vanzari@calpeda.ro | www.calpeda.ro

BS. MXV-B

Pressure boosting sets with 1 to 3 Vertical Multi-Stage Pumps
Fixed speed pump or Variable speed pump (frequency converter)

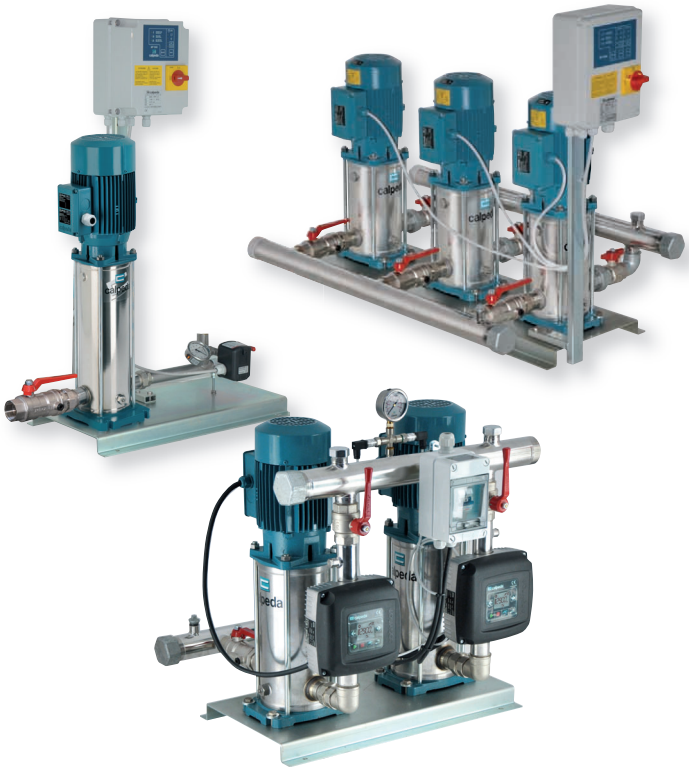

Coverage chart

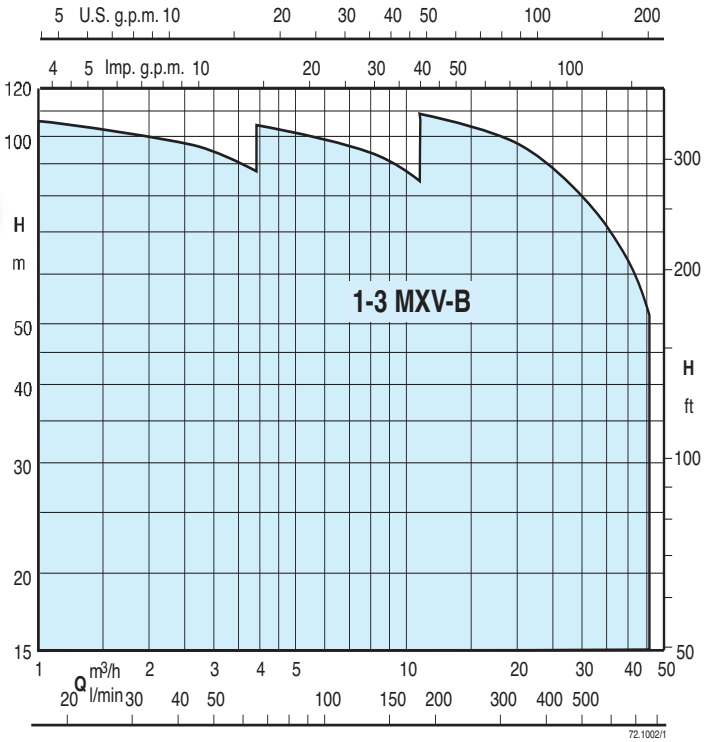

Operation

BS 1-6F **Pressure boosting sets with 1 to 6 fixed speed pump.**
Sets with 4,5 and 6 pumps on request.
Depending on the reduction of the pressure in the system, the pressure switches determine the starting up of the pumps in sequence and the microprocessor alternates the starts.

BS2-3V **Pressure boosting sets with 2 to 3 variable speed pumps (with I-MAT).**
Depending on water consumption, one or more pumps are activated, all at variable speed, in order to guarantee the quantity of water required at the set pressure.

BS1-3V **Pressure boosting sets with 1 to 3 variable speed pumps (with EASYMAT).**
Depending on water consumption, one or more pumps are activated, all at variable speed, in order to guarantee the quantity of water required at the set pressure.

BS1-2V **Pressure boosting sets with 1 to 2 variable speed pumps (with VARIOMAT2).**
Depending on water consumption, one or more pumps are activated, all at variable speed, in order to guarantee the quantity of water required at the set pressure.

BS1V2-5F **Pressure boosting sets with 1 variable speed pump (with frequency converter into the control panel) and from 1 to 5 fixed speed pumps**
Sets with 4,5 and 6 pumps on request.
According to the water consumption, one or more pumps start, one at variable speed and the others at fixed speed, to grant the water quantity required at the set pressure.

BS1-6V **Pressure boosting sets with 1 to 6 variable speed pumps (with frequency converter into the control panel).**
Sets with 4,5 and 6 pumps on request.
Depending on water consumption, one or more pumps are activated, all at variable speed, in order to guarantee the quantity of water required at the set pressure.

Construction

- Automatic pressure boosting plant consisting of 1 to 6 vertical multi-stage pumps complete with ball, non return valve on the suction side and ball valves on the delivery side.

Suction and delivery manifolds for boosting sets with 2,3 pumps:
- stainless steel AISI 304.

Connections are located on the delivery manifold for the installation of vessels G1 connection.

Electrical control boards:
- with microprocessor for fixed speed pump units. Motor starting is D.O.L.
- with frequency converter for variable speed pump units.

The unit includes one pressure gauge and three adjustable differential pressure switches or pressure transducer.

Applications

To supply water in civil and industrial buildings.
As pressure boosting pump to increase water pressure when needed (follow local rules).

Motors

2-pole induction motors, 50 Hz, n ≈ 2900 rpm, suitable for operation with frequency converter.
- Three-phase 230/400V ± 10%.
- Single-phase 230 V ± 10%, with thermal protector.

Insulation class F.
Protection IP 54.
Constructed in accordance with: IEC 60034.
Other voltages and frequencies on request.

Vessels on request

When installing the unit, connect in the delivery section to a diaphragm or galvanised tank.
The recommended sized are shown in the following page.

Special features on request

Pressure boosting sets with 4,5 and 6 pumps.

CALPEDA ROMANIA - INFINITY PUMPS SRL
Tel: 0268.33.47.47 / 0722.244.944
vanzari@calpeda.ro | www.calpeda.ro

BS. MXV-B

Pressure boosting sets with 1 to 3 Vertical Multi-Stage Pumps
Fixed speed pump or Variable speed pump (frequency converter)

Coverage chart

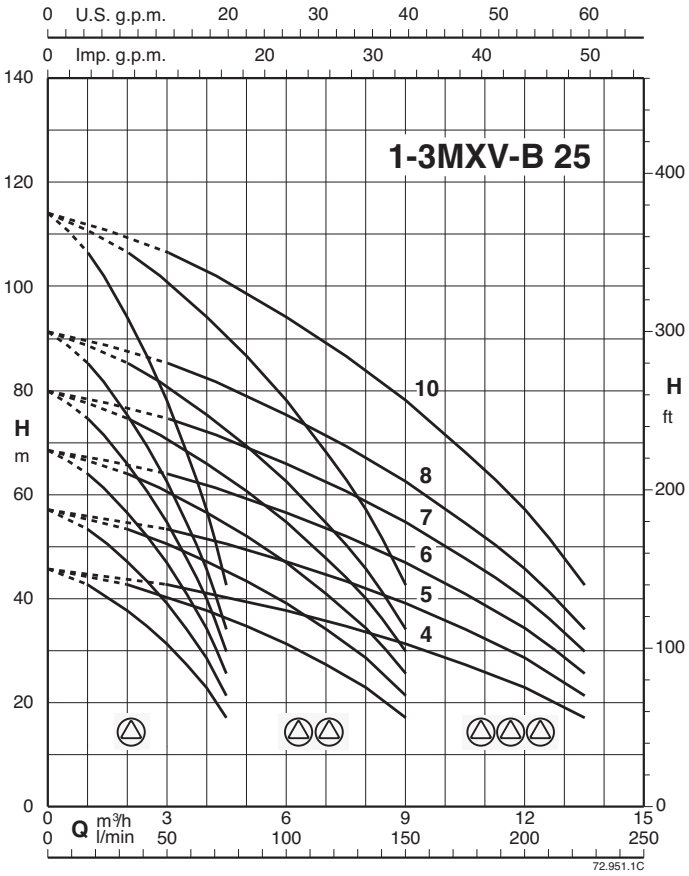

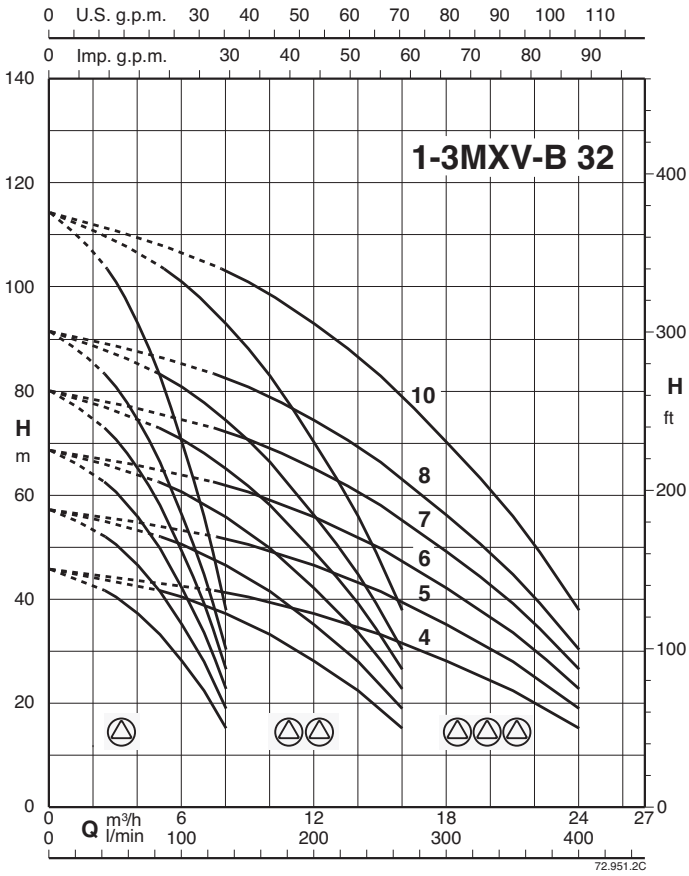

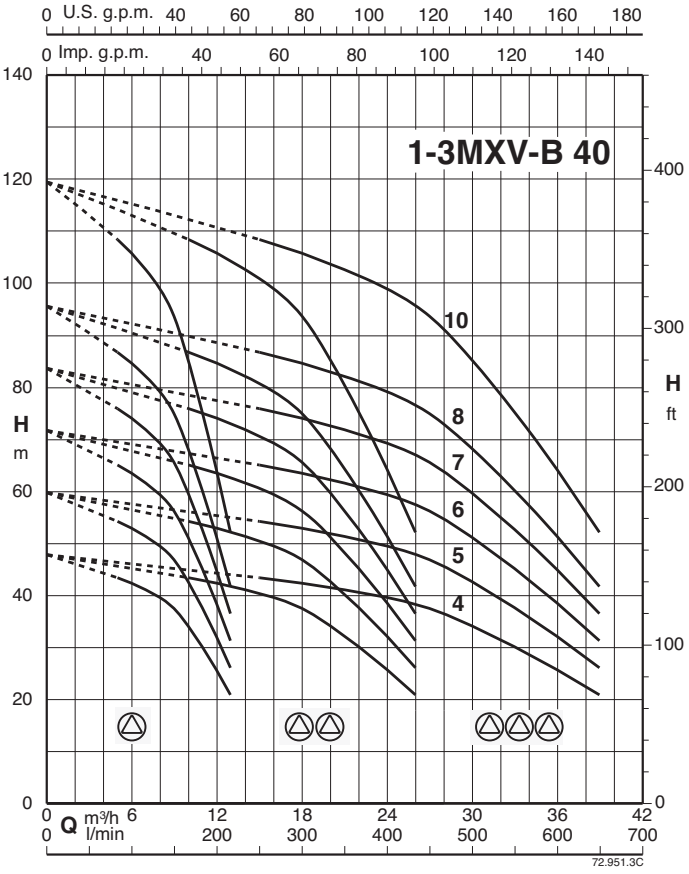

CALPEDA ROMANIA - INFINITY PUMPS SRL
Tel: 0268.33.47.47 / 0722.244.944
vanzari@calpeda.ro | www.calpeda.ro

BS. MXV-B

Pressure boosting sets with 1 to 3 Vertical Multi-Stage Pumps
Fixed speed pump or Variable speed pump (frequency converter)

Performance

BS1F BSM1F

Mains: 400V 3~ Motor: 400V 3~	Mains: 230V 1~ Motor: 230V 1~	Motor		Pres. switch 1 bar		Maximum capacity *		Vessel Membrane litre	Vessel litre
		kW	HP	min	max	**Q** l/min	**H** m		
BS1F 1MXV-B 25-204	**BSM1F 1MXV-BM 25-204**	0,75	1	2,5	4	62	25	40	100
BS1F 1MXV-B 25-205	**BSM1F 1MXV-BM 25-205**	0,75	1	3,5	5	56	36	50	100
BS1F 1MXV-B 25-206	**BSM1F 1MXV-BM 25-206**	1,1	1,5	4	6	59	41	50	100
BS1F 1MXV-B 25-207	**BSM1F 1MXV-BM 25-207**	1,1	1,5	5	7	55	51	50	100
BS1F 1MXV-B 25-208	**BSM1F 1MXV-BM 25-208**	1,5	2	6	8	51	61	60	100
BS1F 1MXV-B 25-210	**BSM1F 1MXV-BM 25-210**	1,5	2	6,5	9,5	60	66	60	100
BS1F 1MXV-B 32-404	**BSM1F 1MXV-BM 32-404**	1,1	1,5	2,3	3,8	114	23	80	100
BS1F 1MXV-B 32-405	**BSM1F 1MXV-BM 32-405**	1,1	1,5	3,4	4,9	103	35	100	100
BS1F 1MXV-B 32-406	**BSM1F 1MXV-BM 32-406**	1,5	2	4	6	105	41	100	100
BS1F 1MXV-B 32-407	**BSM1F 1MXV-BM 32-407**	1,5	2	5	7	99	51	100	300
BS1F 1MXV-B 32-408/A		2,2	3	6	8	93	61	150	300
BS1F 1MXV-B 32-410/A		2,2	3	6,5	9,5	108	66	150	300
BS1F 1MXV-B 40-804	**BSM1F 1MXV-BM 40-804**	1,5	2	2,5	4	214	25	200	300
BS1F 1MXV-B 40-805/A		2,2	3	3,5	5	211	36	300	500
BS1F 1MXV-B 40-806/A		2,2	3	4	6	211	41	300	500
BS1F 1MXV-B 40-807/A		3	4	5	7	208	51	300	500
BS1F 1MXV-B 40-808/A		3	4	6	8	199	61	300	500
BS1F 1MXV-B 40-810/A		3,7	5	7,5	10,5	199	76	500	800

* Maximum pumps flow at minimum setting pressure switch.

BS2F BSM2F

Mains: 400V 3~ Motor: 400V 3~	Mains: 230V 1~ Motor: 230V 1~	Motor		Pres. switch 1 bar		Pres. switch 2 bar		Maximum capacity *		Vessel Membrane litre	Vessel litre
		kW	HP	min	max	min	max	**Q** l/min	**H** m		
BS2F 2MXV-B 25-204	**BSM2F 2MXV-BM 25-204**	0,75 x2	1 x2	2,5	4	2,2	3,7	135	22	40	100
BS2F 2MXV-B 25-205	**BSM2F 2MXV-BM 25-205**	0,75 x2	1 x2	3,5	5	3	4,5	128	31	50	100
BS2F 2MXV-B 25-206	**BSM2F 2MXV-BM 25-206**	1,1 x2	1,5 x2	4	6	3,5	5,5	130	36	50	100
BS2F 2MXV-B 25-207	**BSM2F 2MXV-BM 25-207**	1,1 x2	1,5 x2	5	7	4,5	6,5	122	46	50	100
BS2F 2MXV-B 25-208	**BSM2F 2MXV-BM 25-208**	1,5 x2	2 x2	6	8	5,5	7,5	113	56	60	100
BS2F 2MXV-B 25-210	**BSM2F 2MXV-BM 25-210**	1,5 x2	2 x2	6,5	9,5	6	9	128	61	60	100
BS2F 2MXV-B 32-404	**BSM2F 2MXV-BM 32-404**	1,1 x2	1,5 x2	2,3	3,8	1,8	3,3	253	18	80	100
BS2F 2MXV-B 32-405	**BSM2F 2MXV-BM 32-405**	1,1 x2	1,5 x2	3,4	4,9	3	4,5	226	31	100	100
BS2F 2MXV-B 32-406	**BSM2F 2MXV-BM 32-406**	1,5 x2	2 x2	4	6	3,5	5,5	232	36	100	100
BS2F 2MXV-B 32-407	**BSM2F 2MXV-BM 32-407**	1,5 x2	2 x2	5	7	4,5	6,5	218	46	100	300
BS2F 2MXV-B 32-408/A		2,2 x2	3 x2	6	8	5,5	7,5	205	56	150	300
BS2F 2MXV-B 32-410/A		2,2 x2	3 x2	6,5	9,5	6	9	229	61	150	300
BS2F 2MXV-B 40-804	**BSM2F 2MXV-BM 40-804**	1,5 x2	2 x2	2,5	4	2,2	3,7	435	22	200	300
BS2F 2MXV-B 40-805/A		2,2 x2	3 x2	3,5	5	3	4,5	438	31	300	500
BS2F 2MXV-B 40-806/A		2,2 x2	3 x2	4	6	3,5	5,5	435	36	300	500
BS2F 2MXV-B 40-807/A		3 x2	4 x2	5	7	4,5	6,5	434	46	300	500
BS2F 2MXV-B 40-808/A		3 x2	4 x2	6	8	5,5	7,5	418	56	300	500
BS2F 2MXV-B 40-810/A		3,7 x2	5 x2	8	10	7,5	9,5	399	76	500	800

* Maximum pumps flow at minimum setting pressure of 2 nd pressure switch.

CALPEDA ROMANIA - INFINITY PUMPS SRL
Tel: 0268.33.47.47 / 0722.244.944
vanzari@calpeda.ro | www.calpeda.ro

BS. MXV-B

Pressure boosting sets with 1 to 3 Vertical Multi-Stage Pumps
Fixed speed pump or Variable speed pump (frequency converter)

Performance

BS3F

Mains: 400V 3~ Motor: 400V 3~	Motor		Pres. switch 1 bar		Pres. switch 2 bar		Pres. switch 3 bar		Maximum capacity *		Vessel Membrane	Vessel
	kW	HP	min	max	min	max	min	max	**Q** l/min	**H** m	litre	litre
BS3F 3MXV-B 25-204	0,75 x3	1 x3	2,5	4	2,2	3,7	1,9	3,4	216	19	40	100
BS3F 3MXV-B 25-205	0,75 x3	1 x3	3,5	5	3,2	4,7	2,9	4,4	197	30	50	100
BS3F 3MXV-B 25-206	1,1 x3	1,5 x3	4,5	6	4,2	5,7	3,9	5,4	180	40	50	100
BS3F 3MXV-B 25-207	1,1 x3	1,5 x3	5,5	7	5,2	6,7	4,9	6,4	168	50	50	100
BS3F 3MXV-B 25-208	1,5 x3	2 x3	6,5	8	6,2	7,7	5,9	7,4	157	60	60	100
BS3F 3MXV-B 25-210	1,5 x3	2 x3	6,5	9,5	6	9	5,5	8,5	203	56	60	100
BS3F 3MXV-B 32-404	1,1 x3	1,5 x3	2,3	3,8	2	3,5	1,7	3,2	385	17	80	100
BS3F 3MXV-B 32-405	1,1 x3	1,5 x3	3,4	4,9	3,1	4,6	2,8	4,3	353	29	100	100
BS3F 3MXV-B 32-406	1,5 x3	2 x3	4,4	5,9	4,1	5,6	3,8	5,3	329	39	100	100
BS3F 3MXV-B 32-407	1,5 x3	2 x3	5,5	7	5,2	6,7	4,9	6,4	304	50	100	300
BS3F 3MXV-B 32-408/A	2,2 x3	3 x3	6,5	8	6,2	7,7	5,9	7,4	285	60	150	300
BS3F 3MXV-B 32-410/A	2,2 x3	3 x3	6	9	5,5	8,5	5	8	373	51	150	300
BS3F 3MXV-B 40-804	1,5 x3	2 x3	2,5	4	2,2	3,7	1,9	3,4	643	19	200	300
BS3F 3MXV-B 40-805/A	2,2 x3	3 x3	3,5	5	3,2	4,7	2,9	4,4	658	30	300	500
BS3F 3MXV-B 40-806/A	2,2 x3	3 x3	4,5	6	4,2	5,7	3,9	5,4	640	40	300	500
BS2F 3MXV-B 40-807/A	3 x3	4 x3	5,5	7	5,2	6,7	4,9	6,4	632	50	300	500
BS2F 3MXV-B 40-808/A	3 x3	4 x3	6,5	8	6,2	7,7	5,9	7,4	604	60	300	500
BS2F 3MXV-B 40-810/A	3,7 x3	5 x3	8	10	7,5	9,5	7	9	624	71	500	800

* Maximum pumps flow at minimum setting pressure of 3 nd pressure switch.

CALPEDA ROMANIA - INFINITY PUMPS SRL
Tel: 0268.33.47.47 / 0722.244.944
vanzari@calpeda.ro | www.calpeda.ro

BS. MXV-B

Pressure boosting sets with 1 to 3 Vertical Multi-Stage Pumps
Fixed speed pump or Variable speed pump (frequency converter)

Performance

BS..

PUMPS Nos						PUMP TYPE	P_2 For each pump	
1	2	3	4	5	6		kW	HP
BS1V	BS2V BS1V1F BSM1V1F* BSM2V**	BS3V BS1V2F	BS4V BS1V3F	BS5V BS1V4F	BS6V BS1V5F	MXV-B 25-204	0,75	1
						MXV-B 25-205	0,75	1
						MXV-B 25-206	1,1	1,5
						MXV-B 25-207	1,1	1,5
						MXV-B 25-208	1,5	2
						MXV-B 25-210	1,5	2
						MXV-B 32-404	1,1	1,5
						MXV-B 32-405	1,1	1,5
						MXV-B 32-406	1,5	2
						MXV-B 32-407	1,5	2
						MXV-B 32-408/A	2,2	3
						MXV-B 32-410/A	2,2	3
						MXV-B 40-804	1,5	2
						MXV-B 40-805/A	2,2	3
						MXV-B 40-806/A	2,2	3
						MXV-B 40-807/A	3	4
						MXV-B 40-808/A	3	4
						MXV-B 40-810/A	3,7	5

BS.. ..-ITT

PUMPS Nos		PUMP TYPE	P_2 For each pump	
2	3		kW	HP
BS2V -ITT	BS3V -ITT	MXV-B 25-203-ITT	0,75	1
		MXV-B 25-204-ITT	0,75	1
		MXV-B 25-205-ITT	0,75	1
		MXV-B 25-206/A-ITT	1,1	1,5
		MXV-B 25-207/A-ITT	1,1	1,5
		MXV-B 25-208/A-ITT	1,5	2
		MXV-B 25-210/A-ITT	1,5	2
		MXV-B 32-403-ITT	0,75	1
		MXV-B 32-404/A-ITT	1,1	1,5
		MXV-B 32-405/A-ITT	1,1	1,5
		MXV-B 32-406/A-ITT	1,5	2
		MXV-B 32-407/A-ITT	1,5	2
		MXV-B 32-408/B-ITT	2,2	3
		MXV-B 32-410/B-ITT	2,2	3
		MXV-B 40-803/A-ITT	1,1	1,5
		MXV-B 40-804/A-ITT	1,5	2
		MXV-B 40-805/B-ITT	2,2	3
		MXV-B 40-806/B-ITT	2,2	3
		MXV-B 40-807/A-ITT	3	4
		MXV-B 40-808/A-ITT	3	4
		MXV-B 40-810/B-ITT	3,7	5

(*) SYSTEMS WITH:
1 variable speed pump three-phase motor
1 fixed speed pump single-phase motor
Power supply to control panel 230 V single-phase

(**) Three-phase motor 230 V.
Power supply to control panel: - 230 V three-phase
- 230 V single-phase
Frequency converter output is alwais 230 V three-phase.

BS.. ..-EMT, EMM

PUMPS Nos			PUMP TYPE	P_2 For each pump	
1	2	3		kW	HP
BS1V -EMT -EMM	BS2V -EMT	BS3V -EMT	MXV-B 25-204-EMT	0,75	1
			MXV-B 25-205-EMT	0,75	1
			MXV-B 25-206/A-EMT	1,1	1,5
			MXV-B 25-207/A-EMT	1,1	1,5
			MXV-B 25-208/A-EMT	1,5	2
			MXV-B 25-210/A-EMT	1,5	2
			MXV-B 32-404/A-EMT	1,1	1,5
			MXV-B 32-405/A-EMT	1,1	1,5
			MXV-B 32-406/A-EMT	1,5	2
			MXV-B 32-407/A-EMT	1,5	2
			MXV-B 32-408/B-EMT	2,2	3
			MXV-B 32-410/B-EMT	2,2	3
			MXV-B 40-804/A-EMT	1,5	2
			MXV-B 40-805/B-EMT	2,2	3
			MXV-B 40-806/B-EMT	2,2	3

BS.. ..-VTT2/A

PUMPS Nos		PUMP TYPE	P_2 For each pump	
1	2		kW	HP
BS1V -VTT2/A	BS2V -VTT2/A	MXV-B 25-204-VTT2/A	0,75	1
		MXV-B 25-205-VTT2/A	0,75	1
		MXV-B 25-206/A-VTT2/A	1,1	1,5
		MXV-B 25-207/A-VTT2/A	1,1	1,5
		MXV-B 25-208/A-VTT2/A	1,5	2
		MXV-B 25-210/A-VTT2/A	1,5	2
		MXV-B 32-404/A-VTT2/A	1,1	1,5
		MXV-B 32-405/A-VTT2/A	1,1	1,5
		MXV-B 32-406/A-VTT2/A	1,5	2
		MXV-B 32-407/A-VTT2/A	1,5	2
		MXV-B 32-408/B-VTT2/A	2,2	3
		MXV-B 32-410/B-VTT2/A	2,2	3
		MXV-B 40-804/A-VTT2/A	1,5	2
		MXV-B 40-805/B-VTT2/A	2,2	3
		MXV-B 40-806/B-VTT2/A	2,2	3

CALPEDA ROMANIA - INFINITY PUMPS SRL
Tel: 0268.33.47.47 / 0722.244.944
vanzari@calpeda.ro | www.calpeda.ro

BS. MXV-B

Pressure boosting sets with 1 to 3 Vertical Multi-Stage Pumps
Fixed speed pump or Variable speed pump (frequency converter)

Dimensions and weights

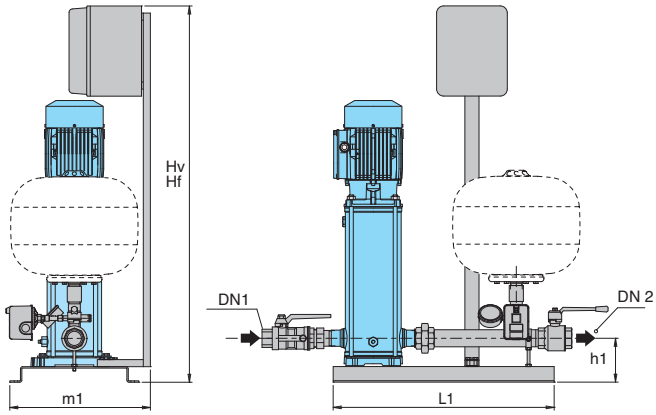

TYPE	TYPE	Connection		mm					weight
		DN 1	DN 2	Hv	Hf	h1	L1	m1	kg
BS1. 1MXV-B 25-204	**BSM1. 1MXV-BM 25-204**	G 1	G 1	1345	1065	120	625	410	-
BS1. 1MXV-B 25-205	**BSM1. 1MXV-BM 25-205**								
BS1. 1MXV-B 25-206	**BSM1. 1MXV-BM 25-206**								
BS1. 1MXV-B 25-207	**BSM1. 1MXV-BM 25-207**								
BS1. 1MXV-B 25-208	**BSM1. 1MXV-BM 25-208**								
BS1. 1MXV-B 25-210	**BSM1. 1MXV-BM 25-210**								
BS1. 1MXV-B 32-404	**BSM1. 1MXV-BM 32-404**	G 1 1/4	G 1 1/4	1345	1065	120	625	410	
BS1. 1MXV-B 32-405	**BSM1. 1MXV-BM 32-405**								
BS1. 1MXV-B 32-406	**BSM1. 1MXV-BM 32-406**								
BS1. 1MXV-B 32-407	**BSM1. 1MXV-BM 32-407**								
BS1. 1MXV-B 32-408/A									
BS1. 1MXV-B 32-410/A									
BS1. 1MXV-B 40-804	**BSM1. 1MXV-BM 40-804**	G 1 1/2	G 1 1/2	1345	1065	125	625	410	
BS1. 1MXV-B 40-805/A									
BS1. 1MXV-B 40-806/A									
BS1. 1MXV-B 40-807/A									
BS1. 1MXV-B 40-808/A									
BS1. 1MXV-B 40-810/A									

Dimensions not binding to be verified when ordering

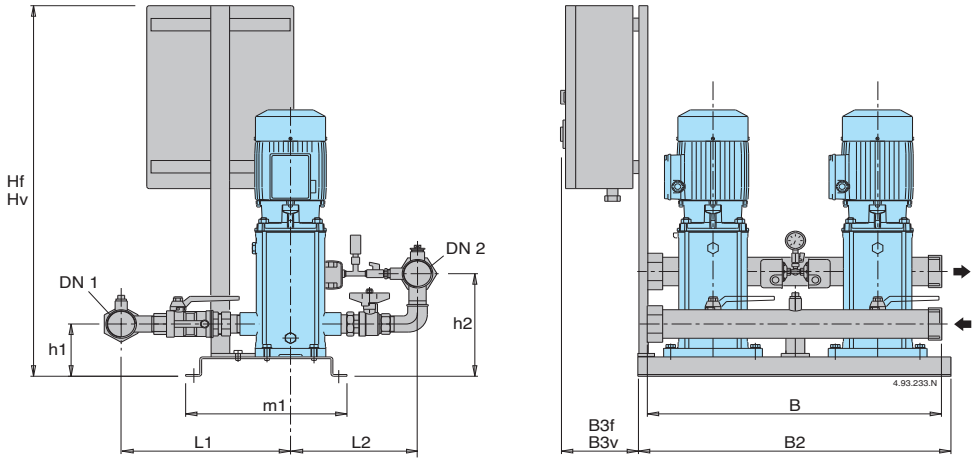

TYPE	TYPE	Connection		mm											weight
		DN 1	DN 2	Hf	Hv	h1	h2	L1	L2	m1	B	B2	B3f	B3v	kg
BS.. 2MXV-B 25-204	**BSM.. 2MXV-BM 25-204**	G 1 1/2	G 1 1/2	875	1145	119	218	335	254	365	600	625	195	260	105
BS.. 2MXV-B 25-205	**BSM.. 2MXV-BM 25-205**														107
BS.. 2MXV-B 25-206	**BSM.. 2MXV-BM 25-206**														109
BS.. 2MXV-B 25-207	**BSM.. 2MXV-BM 25-207**														111
BS.. 2MXV-B 25-208	**BSM.. 2MXV-BM 25-208**														118
BS.. 2MXV-B 25-210	**BSM.. 2MXV-BM 25-210**														
BS.. 2MXV-B 32-404	**BSM.. 2MXV-BM 32-404**	G 2	G 2	875	1145	119	225	360	295	365	600	625	195	260	108
BS.. 2MXV-B 32-405	**BSM.. 2MXV-BM 32-405**														111
BS.. 2MXV-B 32-406	**BSM.. 2MXV-BM 32-406**														115
BS.. 2MXV-B 32-407	**BSM.. 2MXV-BM 32-407**														118
BS.. 2MXV-B 32-408/A															121
BS.. 2MXV-B 32-410/A															
BS.. 2MXV-B 40-804	**BSM.. 2MXV-BM 40-804**	G 2 1/2	G 2 1/2	875	1145	124	245	400	305	365	600	625	195	260	116
BS.. 2MXV-B 40-805/A															119
BS.. 2MXV-B 40-806/A															121
BS.. 2MXV-B 40-807/A															143
BS.. 2MXV-B 40-808/A															145
BS.. 2MXV-B 40-810/A															

Dimensions not binding to be verified when ordering

CALPEDA ROMANIA - INFINITY PUMPS SRL
Tel: 0268.33.47.47 / 0722.244.944
vanzari@calpeda.ro | www.calpeda.ro

BS. MXV-B

Pressure boosting sets with 1 to 3 Vertical Multi-Stage Pumps
Fixed speed pump or Variable speed pump (frequency converter)

Dimensions and weights

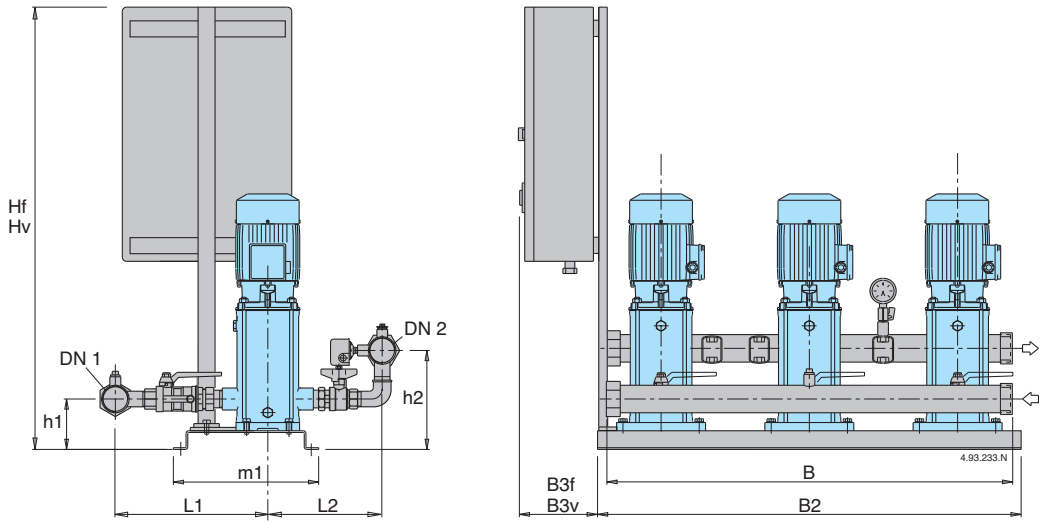

TYPE	Connection		mm											weight
	DN 1	DN 2	Hf	Hv	h1	h2	L1	L2	m1	B	B2	B3f	B3v	kg
BS.. 3MXV-B 25-204	G 2	G 2	1090	1160	134	233	340	254	406	950	1000	220	220	103
BS.. 3MXV-B 25-205														105
BS.. 3MXV-B 25-206														107
BS.. 3MXV-B 25-207														118
BS.. 3MXV-B 25-208														120
BS.. 3MXV-B 25-210														
BS.. 3MXV-B 32-404	G 2 1/2	G 2 1/2	1090	1160	134	240	368	295	406	950	1000	220	220	104
BS.. 3MXV-B 32-405														108
BS.. 3MXV-B 32-406														113
BS.. 3MXV-B 32-407														118
BS.. 3MXV-B 32-408/A														122
BS.. 3MXV-B 32-410/A														
BS.. 3MXV-B 40-804	G 3	G 3	1090	1160	139	260	405	305	406	950	1000	220	220	111
BS.. 3MXV-B 40-805/A														117
BS.. 3MXV-B 40-806/A														123
BS.. 3MXV-B 40-807/A														156
BS.. 3MXV-B 40-808/A														159
BS.. 3MXV-B 40-810/A														

Dimensions not binding to be verified when ordering

CALPEDA ROMANIA - INFINITY PUMPS SRL
Tel: 0268.33.47.47 / 0722.244.944
vanzari@calpeda.ro | www.calpeda.ro

BS. MXVB. EM

Pressure boosting sets with 1 to 3 vertical multi-stage pumps with EASYMAT frequency converter

Characteristic and dimensions

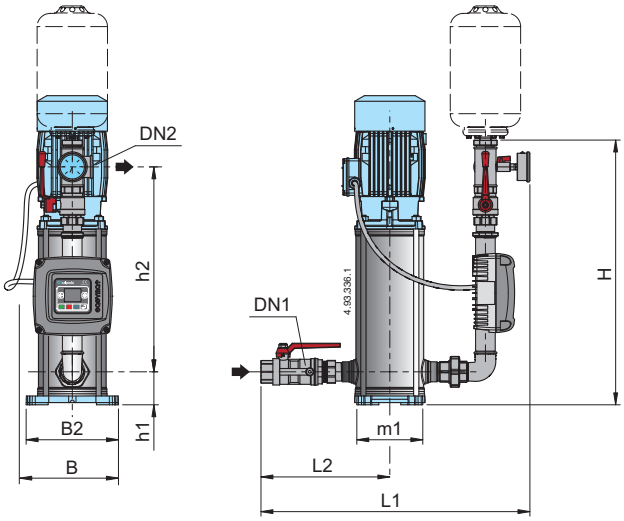

Mains: 1~ 230V Motor: 3~ 230V	mains A	motor A	Mains: 1~ 230V Motor: 1~ 230V	A	P2 kW	P2 HP	Connection DN1	Connection DN2	mm H	h1	h2	L1	L2	m1	B	B2
BSM1V 1MXV-B 25-204-EMT	5,4	3,3	BSM1V 1MXV-BM 25-204-EMM	5,8	0,75	1	G 1	G 1	577	75	437	588	262	150	218	210
BSM1V 1MXV-B 25-205-EMT	5,4	3,3	BSM1V 1MXV-BM 25-205-EMM	5,8	0,75	1										
BSM1V 1MXV-B 25-206/A-EMT	7,1	4,7	BSM1V 1MXV-BM 25-206-EMM	7,4	1,1	1,5										
BSM1V 1MXV-B 25-207/A-EMT	7,1	4,7	BSM1V 1MXV-BM 25-207-EMM	7,4	1,1	1,5										
BSM1V 1MXV-B 25-208/A-EMT	10,8	7,5			1,5	2										
BSM1V 1MXV-B 25-210/A-EMT	10,8	7,5			1,5	2										
BSM1V 1MXV-B 32-404/A-EMT	7,1	4,7	BSM1V 1MXV-BM 32-404-EMM	7,4	1,1	1,5	G 1 1/4	G 1 1/4	600	75	458	633	288	150	218	210
BSM1V 1MXV-B 32-405/A-EMT	7,1	4,7	BSM1V 1MXV-BM 32-405-EMM	7,4	1,1	1,5										
BSM1V 1MXV-B 32-406/A-EMT	10,8	7,5			1,5	2										
BSM1V 1MXV-B 32-407/A-EMT	10,8	7,5			1,5	2										
BSM1V 1MXV-B 32-408/B-EMT	13,2	9,15			2,2	3										
BSM1V 1MXV-B 32-410/B-EMT	13,2	9,15			2,2	3										
BSM1V 1MXV-B 40-804/A-EMT	10,8	7,5			1,5	2	G 1 1/2	G 1 1/2	623	80	470	675	318	190	246	246
BSM1V 1MXV-B 40-805/B-EMT	13,2	9,15			2,2	3										
BSM1V 1MXV-B 40-806/B-EMT	13,2	9,15			2,2	3										

Dimensions not binding to be verified when ordering

CALPEDA ROMANIA - INFINITY PUMPS SRL
Tel: 0268.33.47.47 / 0722.244.944
vanzari@calpeda.ro | www.calpeda.ro

BS. MXVB. EM

Pressure boosting sets with 1 to 3 vertical multi-stage pumps with EASYMAT frequency converter

Characteristic and dimensions

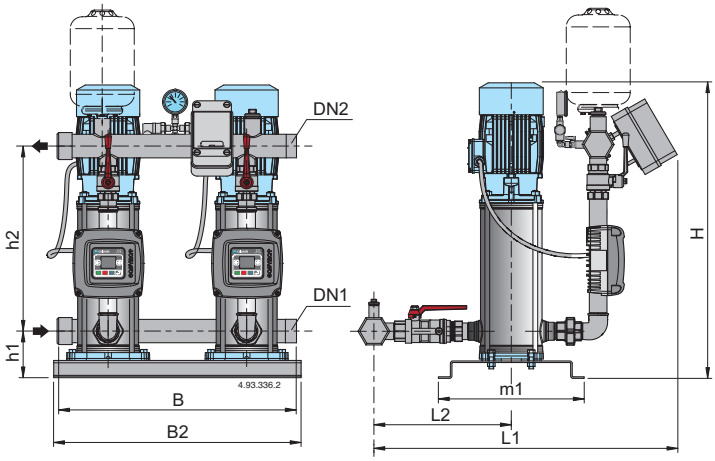

Mains: 1~ 230V Motor: 3~ 230V	mains A	motor A	P2 kW	P2 HP	Connection DN1	Connection DN2	mm H	h1	h2	L1	L2	m1	B	B2
BSM2V 2MXV-B 25-204-EMT	2 x 5,4	2 x 3,3	2 x 0,75	2 x 1	G 1 1/2	G 1 1/2	727	119	461	501	315	365	600	625
BSM2V 2MXV-B 25-205-EMT	2 x 5,4	2 x 3,3	2 x 0,75	2 x 1										
BSM2V 2MXV-B 25-206/A-EMT	2 x 7,1	2 x 4,7	2 x 1,1	2 x 1,5										
BSM2V 2MXV-B 25-207/A-EMT	2 x 7,1	2 x 4,7	2 x 1,1	2 x 1,5										
BSM2V 2MXV-B 25-208/A-EMT	2 x 10,8	2 x 7,5	2 x 1,5	2 x 2										
BSM2V 2MXV-B 25-210/A-EMT	2 x 10,8	2 x 7,5	2 x 1,5	2 x 2										
BSM2V 2MXV-B 32-404/A-EMT	2 x 7,1	2 x 4,7	2 x 1,1	2 x 1,5	G 2	G 2	743	119	477	544	340	365	600	625
BSM2V 2MXV-B 32-405/A-EMT	2 x 7,1	2 x 4,7	2 x 1,1	2 x 1,5										
BSM2V 2MXV-B 32-406/A-EMT	2 x 10,8	2 x 7,5	2 x 1,5	2 x 2										
BSM2V 2MXV-B 32-407/A-EMT	2 x 10,8	2 x 7,5	2 x 1,5	2 x 2										
BSM2V 2MXV-B 32-408/B-EMT	2 x 13,2	2 x 9,15	2 x 2,2	2 x 3										
BSM2V 2MXV-B 32-410/B-EMT	2 x 13,2	2 x 9,15	2 x 2,2	2 x 3										
BSM2V 2MXV-B 40-804/A-EMT	2 x 10,8	2 x 7,5	2 x 1,5	2 x 2	G 2 1/2	G 2 1/2	765	124	495	598	388	365	600	625
BSM2V 2MXV-B 40-805/B-EMT	2 x 13,2	2 x 9,15	2 x 2,2	2 x 3										
BSM2V 2MXV-B 40-806/B-EMT	2 x 13,2	2 x 9,15	2 x 2,2	2 x 3										

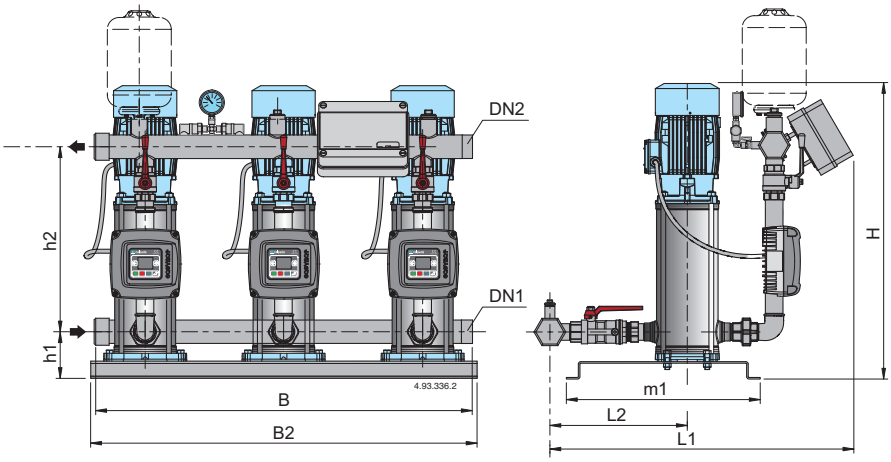

Mains: 1~ 230V Motor: 3~ 230V	mains A	motor A	P2 kW	P2 HP	Connection DN1	Connection DN2	mm H	h1	h2	L1	L2	m1	B	B2
BSM3V 3MXV-B 25-204-EMT	3 x 5,4	3 x 3,3	3 x 0,75	3 x 1	G 1 1/2	G 1 1/2	727	119	461	501	315	365	600	625
BSM3V 3MXV-B 25-205-EMT	3 x 5,4	3 x 3,3	3 x 0,75	3 x 1										
BSM3V 3MXV-B 25-206/A-EMT	3 x 7,1	3 x 4,7	3 x 1,1	3 x 1,5										
BSM3V 3MXV-B 25-207/A-EMT	3 x 7,1	3 x 4,7	3 x 1,1	3 x 1,5										
BSM3V 3MXV-B 25-208/A-EMT	3 x 10,8	3 x 7,5	3 x 1,5	3 x 2										
BSM3V 3MXV-B 25-210/A-EMT	3 x 10,8	3 x 7,5	3 x 1,5	3 x 2										
BSM3V 3MXV-B 32-404/A-EMT	3 x 7,1	3 x 4,7	3 x 1,1	3 x 1,5	G 2	G 2	743	119	477	544	340	365	600	625
BSM3V 3MXV-B 32-405/A-EMT	3 x 7,1	3 x 4,7	3 x 1,1	3 x 1,5										
BSM3V 3MXV-B 32-406/A-EMT	3 x 10,8	3 x 7,5	3 x 1,5	3 x 2										
BSM3V 3MXV-B 32-407/A-EMT	3 x 10,8	3 x 7,5	3 x 1,5	3 x 2										
BSM3V 3MXV-B 32-408/B-EMT	3 x 13,2	3 x 9,15	3 x 2,2	3 x 3										
BSM3V 3MXV-B 32-410/B-EMT	3 x 13,2	3 x 9,15	3 x 2,2	3 x 3										
BSM3V 3MXV-B 40-804/A-EMT	3 x 10,8	3 x 7,5	3 x 1,5	3 x 2	G 2 1/2	G 2 1/2	765	124	495	598	388	365	600	625
BSM3V 3MXV-B 40-805/B-EMT	3 x 13,2	3 x 9,15	3 x 2,2	3 x 3										
BSM3V 3MXV-B 40-806/B-EMT	3 x 13,2	3 x 9,15	3 x 2,2	3 x 3										

Dimensions not binding to be verified when ordering

CALPEDA ROMANIA - INFINITY PUMPS SRL
Tel: 0268.33.47.47 / 0722.244.944
vanzari@calpeda.ro | www.calpeda.ro

BS. MXVB. VTT2

Pressure boosting sets with one vertical multi-stage pump with VARIOMAT 2 frequency converter

Characteristic and dimensions

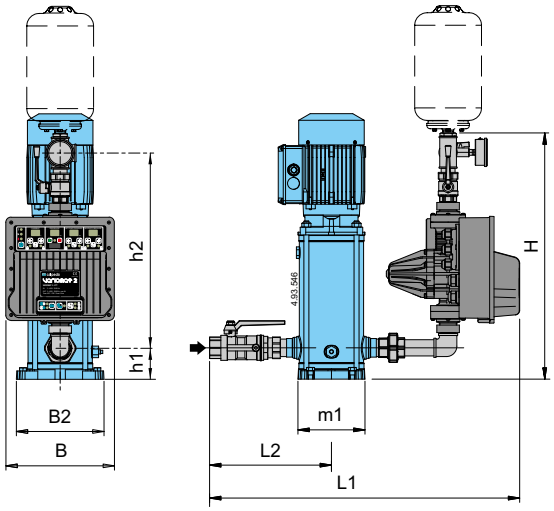

Mains: 3~ 400V Motor: 3~ 400V		P_2		Connection		mm							
	A	kW	HP	DN1	DN2	H	h1	h2	L1	L2	m1	B	B2
BS1V 1MXV-B 25-204-VTT2/A	2,3	0,75	1	G 1	G 1	590	75	440	716	265	150	225	260
BS1V 1MXV-B 25-205-VTT2/A	2,3	0,75	1										
BS1V 1MXV-B 25-206/A-VTT2/A	2,9	1,1	1,5										
BS1V 1MXV-B 25-207/A-VTT2/A	2,9	1,1	1,5										
BS1V 1MXV-B 25-208/A-VTT2/A	4,3	1,5	2										
BS1V 1MXV-B 25-210/A-VTT2/A	4,3	1,5	2										
BS1V 1MXV-B 32-404/A-VTT2/A	2,9	1,1	1,5	G 1 1/4	G 1 1/4	585	75	460	761	295	150	225	260
BS1V 1MXV-B 32-405/A-VTT2/A	2,9	1,1	1,5										
BS1V 1MXV-B 32-406/A-VTT2/A	4,3	1,5	2										
BS1V 1MXV-B 32-407/A-VTT2/A	4,3	1,5	2										
BS1V 1MXV-B 32-408/B-VTT2/A	5,3	2,2	3										
BS1V 1MXV-B 32-410/B-VTT2/A	5,3	2,2	3										
BS1V 1MXV-B 40-804/A-VTT2/A	4,3	1,5	2	G 1 1/2	G 1 1/2	595	80	465	825	345	150	225	260
BS1V 1MXV-B 40-805/B-VTT2/A	5,3	2,2	3										
BS1V 1MXV-B 40-806/B-VTT2/A	5,3	2,2	3										

Dimensions not binding to be verified when ordering

CALPEDA ROMANIA - INFINITY PUMPS SRL
Tel: 0268.33.47.47 / 0722.244.944
vanzari@calpeda.ro | www.calpeda.ro

BS. MXVB. VTT2

Pressure boosting sets with two vertical multi-stage pumps with VARIOMAT 2 frequency converter

Characteristic and dimensions

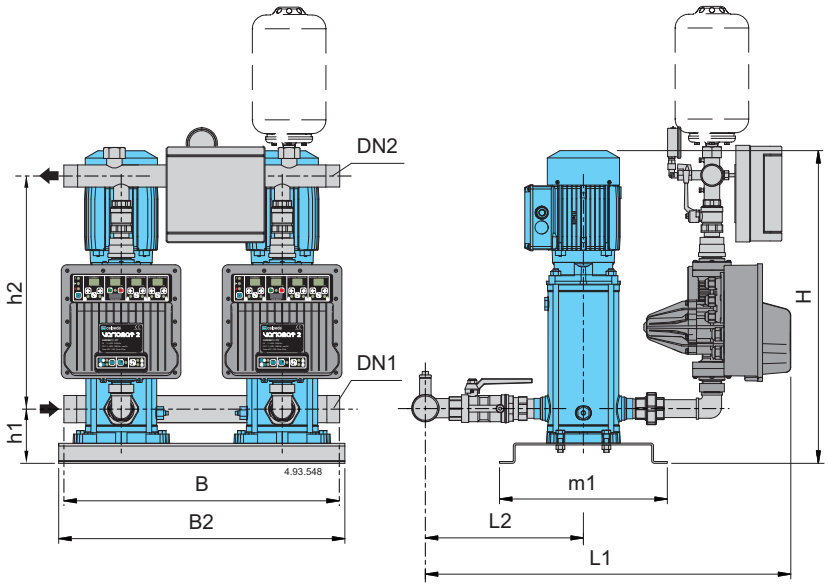

Mains: 3~ 400V Motor: 3~ 400V		P2		Connection		mm							
	A	kW	HP	DN1	DN2	H	h1	h2	L1	L2	m1	B	B2
BS2V 2MXV-B 25-204-VTT2/A	2 x 2,3	2 x 0,75	2 x 1	G 1 1/2	G 1 1/2	850	119	740	674	315	365	600	625
BS2V 2MXV-B 25-205-VTT2/A	2 x 2,3	2 x 0,75	2 x 1										
BS2V 2MXV-B 25-206/A-VTT2/A	2 x 2,9	2 x 1,1	2 x 1,5										
BS2V 2MXV-B 25-207/A-VTT2/A	2 x 2,9	2 x 1,1	2 x 1,5										
BS2V 2MXV-B 25-208/A-VTT2/A	2 x 4,3	2 x 1,5	2 x 2										
BS2V 2MXV-B 25-210/A-VTT2/A	2 x 4,3	2 x 1,5	2 x 2										
BS2V 2MXV-B 32-404/A-VTT2/A	2 x 2,9	2 x 1,1	2 x 1,5	G 2	G 2	850	119	740	644	345	365	600	625
BS2V 2MXV-B 32-405/A-VTT2/A	2 x 2,9	2 x 1,1	2 x 1,5										
BS2V 2MXV-B 32-406/A-VTT2/A	2 x 4,3	2 x 1,5	2 x 2										
BS2V 2MXV-B 32-407/A-VTT2/A	2 x 4,3	2 x 1,5	2 x 2										
BS2V 2MXV-B 32-408/B-VTT2/A	2 x 5,3	2 x 2,2	2 x 3										
BS2V 2MXV-B 32-410/B-VTT2/A	2 x 5,3	2 x 2,2	2 x 3										
BS2V 2MXV-B 40-804/A-VTT2/A	2 x 4,3	2 x 1,5	2 x 2	G 2 1/2	G 2 1/2	850	124	740	709	425	365	600	625
BS2V 2MXV-B 40-805/B-VTT2/A	2 x 5,3	2 x 2,2	2 x 3										
BS2V 2MXV-B 40-806/B-VTT2/A	2 x 5,3	2 x 2,2	2 x 3										

Dimensions not binding to be verified when ordering

CALPEDA ROMANIA - INFINITY PUMPS SRL
Tel: 0268.33.47.47 / 0722.244.944
vanzari@calpeda.ro | www.calpeda.ro

BS. MXVB. ITT

Pressure boosting sets with 2 to 3 vertical multi-stage pumps with I-MAT frequency converter

Dimensions and weights

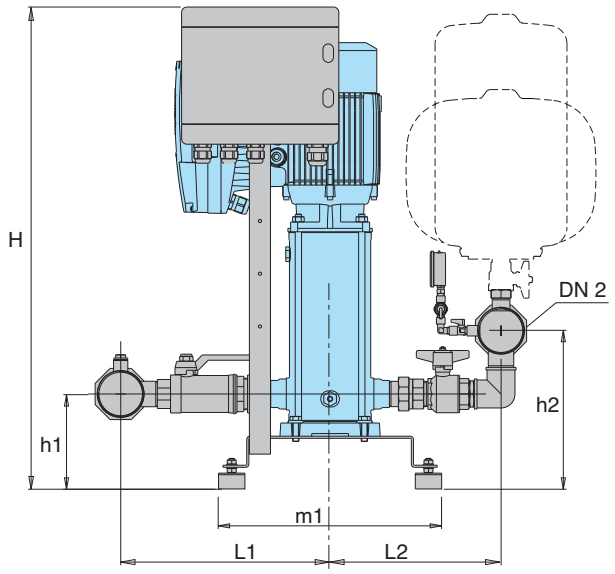

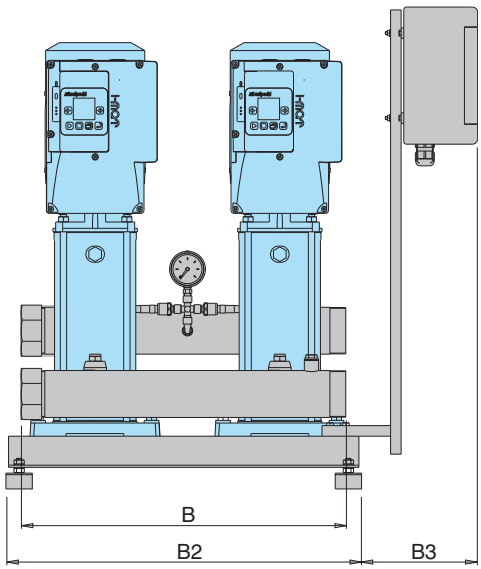

TYPE	Motor			Connection		mm									weight
	kW	HP	A	DN 1	DN 2	H	h1	h2	L1	L2	m1	B	B2	B3	kg
BS2V 2MXV-B 25-203-ITT	0,75 x2	1 x2	1,9 x2	G 1 1/2	G 1 1/2	887	148	224	336	287	332	600	625	185	
BS2V 2MXV-B 25-204-ITT	0,75 x2	1 x2	1,9 x2												105
BS2V 2MXV-B 25-205-ITT	0,75 x2	1 x2	1,9 x2												107
BS2V 2MXV-B 25-206/A-ITT	1,1 x2	1,5 x2	2,7 x2												109
BS2V 2MXV-B 25-207/A-ITT	1,1 x2	1,5 x2	2,7 x2												111
BS2V 2MXV-B 25-208/A-ITT	1,5 x2	2 x2	4,3 x2												118
BS2V 2MXV-B 25-210/A-ITT	1,5 x2	2 x2	4,3 x2												
BS2V 2MXV-B 32-403-ITT	0,75 x2	1 x2	1,9 x2	G 2	G 2	887	148	239	336	287	332	600	625	185	
BS2V 2MXV-B 32-404/A-ITT	1,1 x2	1,5 x2	2,7 x2												108
BS2V 2MXV-B 32-405/A-ITT	1,1 x2	1,5 x2	2,7 x2												111
BS2V 2MXV-B 32-406/A-ITT	1,5 x2	2 x2	4,3 x2												115
BS2V 2MXV-B 32-407/A-ITT	1,5 x2	2 x2	4,3 x2												118
BS2V 2MXV-B 32-408/B-ITT	2,2 x2	3 x2	5,3 x2												121
BS2V 2MXV-B 32-410/B-ITT	2,2 x2	3 x2	5,3 x2												
BS2V 2MXV-B 40-803/A-ITT	1,1 x2	1,5 x2	2,7 x2	G 2 1/2	G 2 1/2	887	153	266	391	324	332	600	625	185	
BS2V 2MXV-B 40-804/A-ITT	1,5 x2	2 x2	4,3 x2												116
BS2V 2MXV-B 40-805/B-ITT	2,2 x2	3 x2	5,3 x2												119
BS2V 2MXV-B 40-806/B-ITT	2,2 x2	3 x2	5,3 x2												121
BS2V 2MXV-B 40-807/A-ITT	3 x2	4 x2	6,6 x2												143
BS2V 2MXV-B 40-808/A-ITT	3 x2	4 x2	6,6 x2												145
BS2V 2MXV-B 40-810/B-ITT	3,7 x2	5 x2	9,6 x2												

Dimensions not binding to be verified when ordering

CALPEDA ROMANIA - INFINITY PUMPS SRL
Tel: 0268.33.47.47 / 0722.244.944
vanzari@calpeda.ro | www.calpeda.ro

BS. MXVB. ITT

Pressure boosting sets with 2 to 3 vertical multi-stage pumps with I-MAT frequency converter

Dimensions and weights

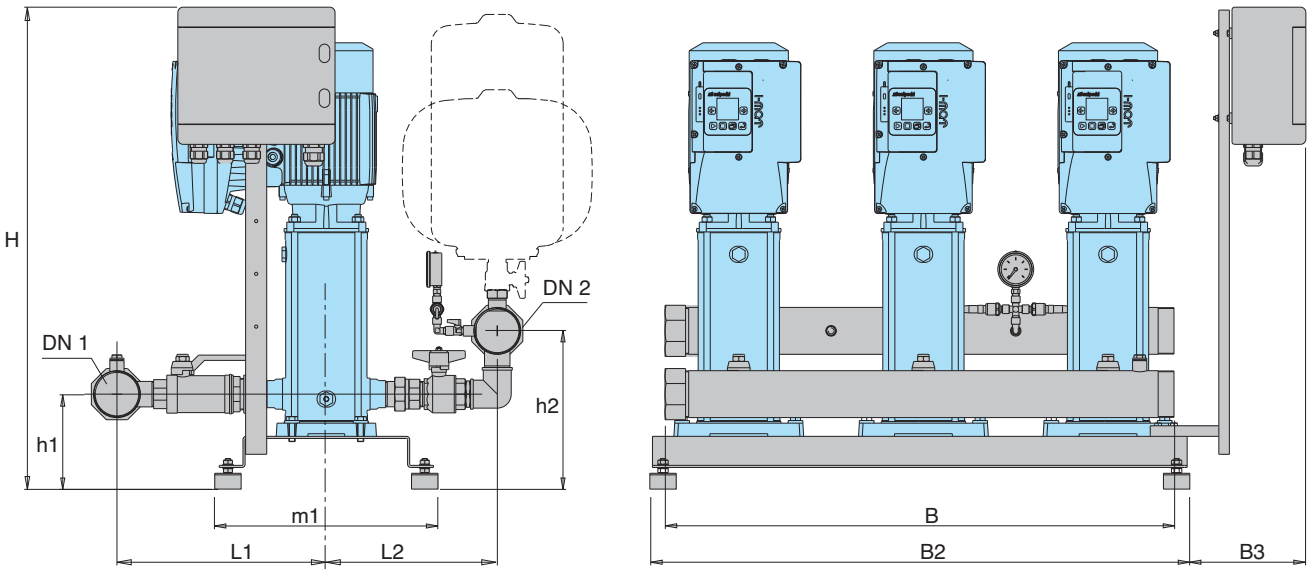

TYPE	Motor			Connection		mm									weight
	kW	HP	A	DN 1	DN 2	H	h1	h2	L1	L2	m1	B	B2	B3	kg
BS3V 3MXV-B 25-203-ITT	0,75 x3	1 x3	1,9 x3												
BS3V 3MXV-B 25-204-ITT	0,75 x3	1 x3	1,9 x3												105
BS3V 3MXV-B 25-205-ITT	0,75 x3	1 x3	1,9 x3												107
BS3V 3MXV-B 25-206/A-ITT	1,1 x3	1,5 x3	2,7 x3	G 2	G 2	914	175	257	311,5	305,5	373	950	1010	225	109
BS3V 3MXV-B 25-207/A-ITT	1,1 x3	1,5 x3	2,7 x3												111
BS3V 3MXV-B 25-208/A-ITT	1,5 x3	2 x3	4,3 x3												118
BS3V 3MXV-B 25-210/A-ITT	1,5 x3	2 x3	4,3 x3												
BS3V 3MXV-B 32-403-ITT	0,75 x3	1 x3	1,9 x3												
BS3V 3MXV-B 32-404/A-ITT	1,1 x3	1,5 x3	2,7 x3												108
BS3V 3MXV-B 32-405/A-ITT	1,1 x3	1,5 x3	2,7 x3												111
BS3V 3MXV-B 32-406/A-ITT	1,5 x3	2 x3	4,3 x3	G 2 1/2	G 2 1/2	914	175	275	344,5	287,5	373	950	1010	225	115
BS3V 3MXV-B 32-407/A-ITT	1,5 x3	2 x3	4,3 x3												118
BS3V 3MXV-B 32-408/B-ITT	2,2 x3	3 x3	5,3 x3												121
BS3V 3MXV-B 32-410/B-ITT	2,2 x3	3 x3	5,3 x3												
BS3V 3MXV-B 40-803/A-ITT	1,1 x3	1,5 x3	2,7 x3												
BS3V 3MXV-B 40-804/A-ITT	1,5 x3	2 x3	4,3 x3												116
BS3V 3MXV-B 40-805/B-ITT	2,2 x3	3 x3	5,3 x3												119
BS3V 3MXV-B 40-806/B-ITT	2,2 x3	3 x3	5,3 x3	G 3	G 3	914	180	300	402,5	329,5	373	950	1010	225	121
BS3V 3MXV-B 40-807/A-ITT	3 x3	4 x3	6,6 x3												143
BS3V 3MXV-B 40-808/A-ITT	3 x3	4 x3	6,6 x3												145
BS3V 3MXV-B 40-810/B-ITT	3,7 x3	5 x3	9,6 x3												

Dimensions not binding to be verified when ordering

CALPEDA ROMANIA - INFINITY PUMPS SRL
Tel: 0268.33.47.47 / 0722.244.944
vanzari@calpeda.ro | www.calpeda.ro

BS. MXV

Pressure boosting sets with 1 to 3 Vertical Multi-Stage Pumps
Fixed speed pump or Variable speed pump (frequency converter)

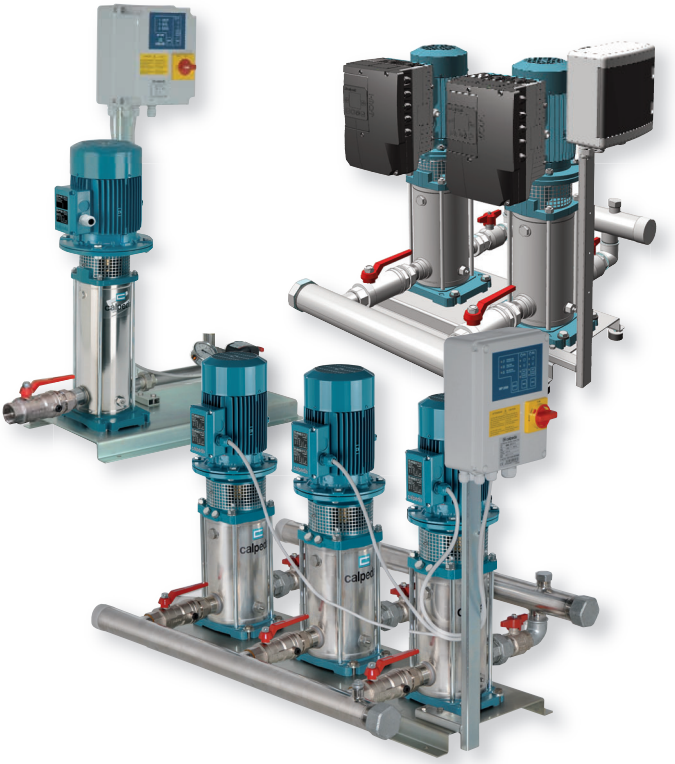

Coverage chart

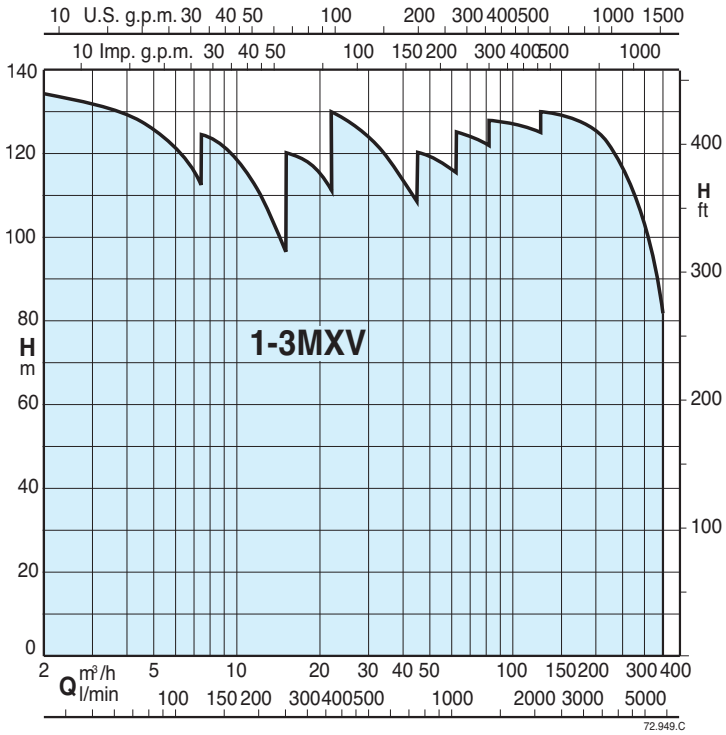

Operation

BS 1-6F **Pressure boosting sets with 1 to 6 fixed speed pump.**
Sets with 4,5 and 6 pumps on request.
Depending on the reduction of the pressure in the system, the pressure switches determine the starting up of the pumps in sequence and the microprocessor alternates the starts.

BS2-3V **Pressure boosting sets with 2 to 3 variable speed pumps (with I-MAT).**
Depending on water consumption, one or more pumps are activated, all at variable speed, in order to guarantee the quantity of water required at the set pressure.

BS1V2-5F **Pressure boosting sets with 1 variable speed pump (with frequency converter into the control panel) and from 1 to 5 fixed speed pumps**
Sets with 4,5 and 6 pumps on request.
According to the water consumption, one or more pumps start, one at variable speed and the others at fixed speed, to grant the water quantity required at the set pressure.

BS1-6V **Pressure boosting sets with 1 to 6 variable speed pumps (with frequency converter into the control panel).**
Sets with 4,5 and 6 pumps on request.
Depending on water consumption, one or more pumps are activated, all at variable speed, in order to guarantee the quantity of water required at the set pressure.

Construction

- Automatic pressure boosting plant consisting of 1 to 6 vertical multi-stage pumps complete with ball, non return valve on the suction side and ball valves on the delivery side.

Suction and delivery manifolds for boosting sets with 2,3 pumps:
- stainless steel AISI 304.
Connections are located on the delivery manifold for the installation of vessels G1 connection.

Electrical control boards:
- with microprocessor for fixed speed pump units. Motor starting is D.O.L. up to 5,5 kW and Y/Δ for power rating 7,5 up to 37 kW.
- with frequency converter for variable speed pump units.

The unit includes one pressure gauge and three adjustable differential pressure switches or pressure transducer.

Applications

To supply water in civil and industrial buildings.
As pressure boosting pump to increase water pressure when needed (follow local rules).

Motors

2-pole induction motors, 50 Hz, n ≈ 2900 rpm, suitable for operation with frequency converter.
- Three-phase 230/400V ± 10% up to 3 kW;
  400/690V ± 10% for 4 kW to 37 kW;
- Single-phase 230 V ± 10%, (on request).

Insulation class F.
Protection IP 55.
Constructed in accordance with: IEC 60034.
Other voltages and frequencies on request.

Vessels on request

When installing the unit, connect in the delivery section to a diaphragm or galvanised tank.
The recommended sized are shown in the following page.

Special features on request

Pressure boosting sets with 4,5 and 6 pumps.

CALPEDA ROMANIA - INFINITY PUMPS SRL
Tel: 0268.33.47.47 / 0722.244.944
vanzari@calpeda.ro | www.calpeda.ro

BS. MXV

Pressure boosting sets with 1 to 3 Vertical Multi-Stage Pumps
Fixed speed pump or Variable speed pump (frequency converter)

Coverage chart

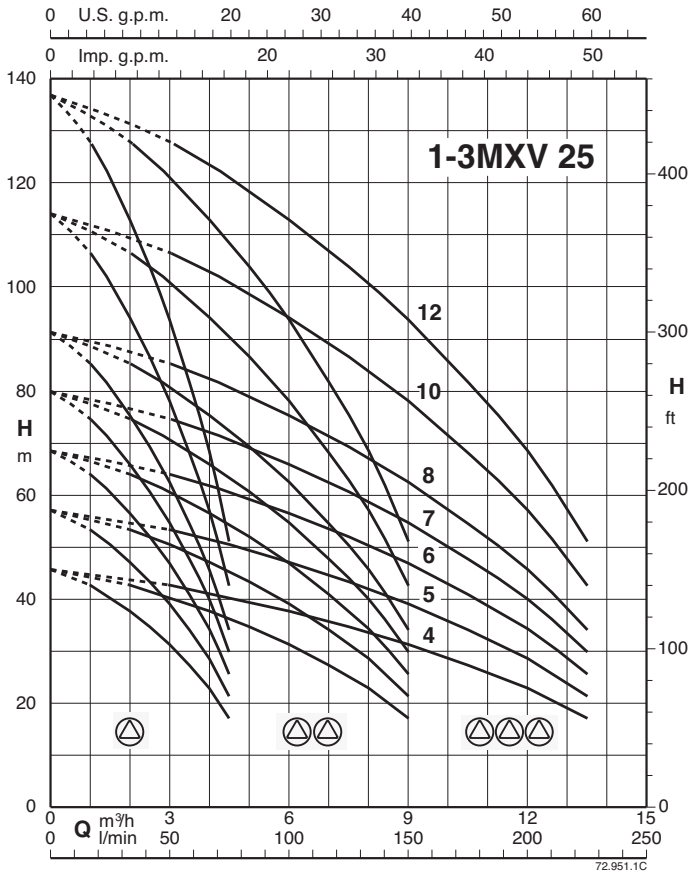

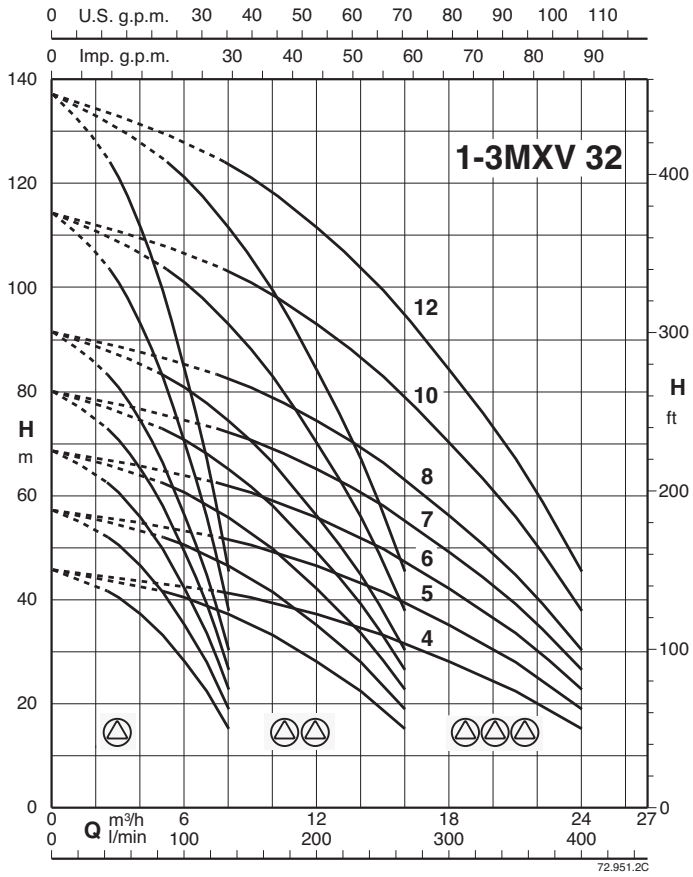

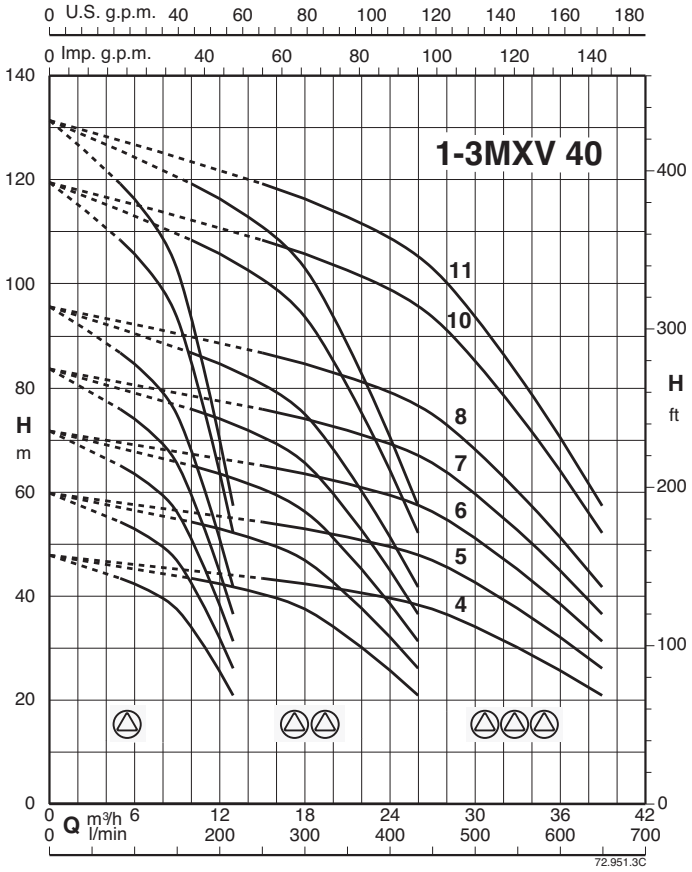

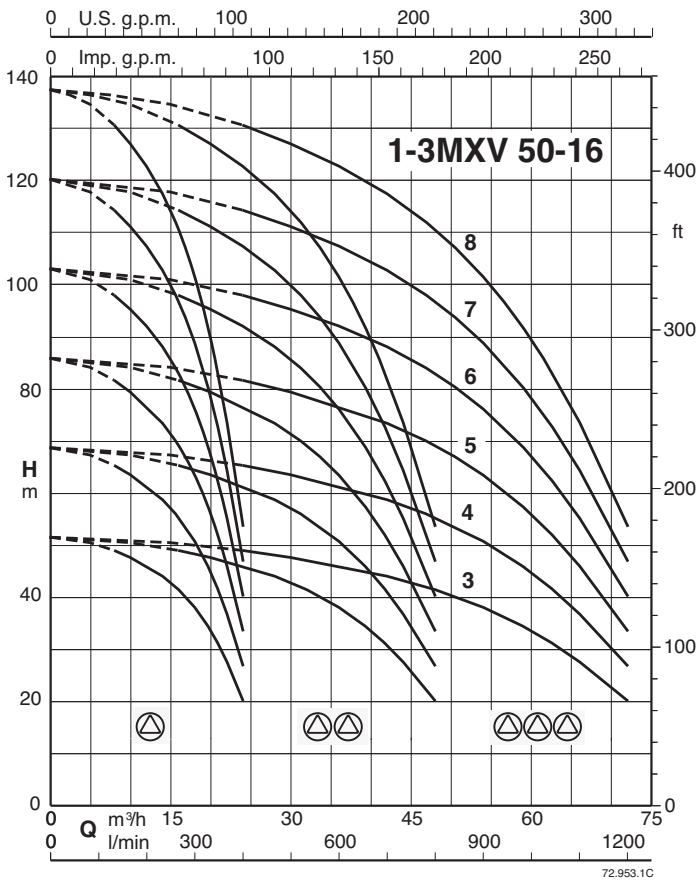

CALPEDA ROMANIA - INFINITY PUMPS SRL
Tel: 0268.33.47.47 / 0722.244.944
vanzari@calpeda.ro | www.calpeda.ro

BS. MXV

Pressure boosting sets with 1 to 3 Vertical Multi-Stage Pumps
Fixed speed pump or Variable speed pump (frequency converter)

Coverage chart

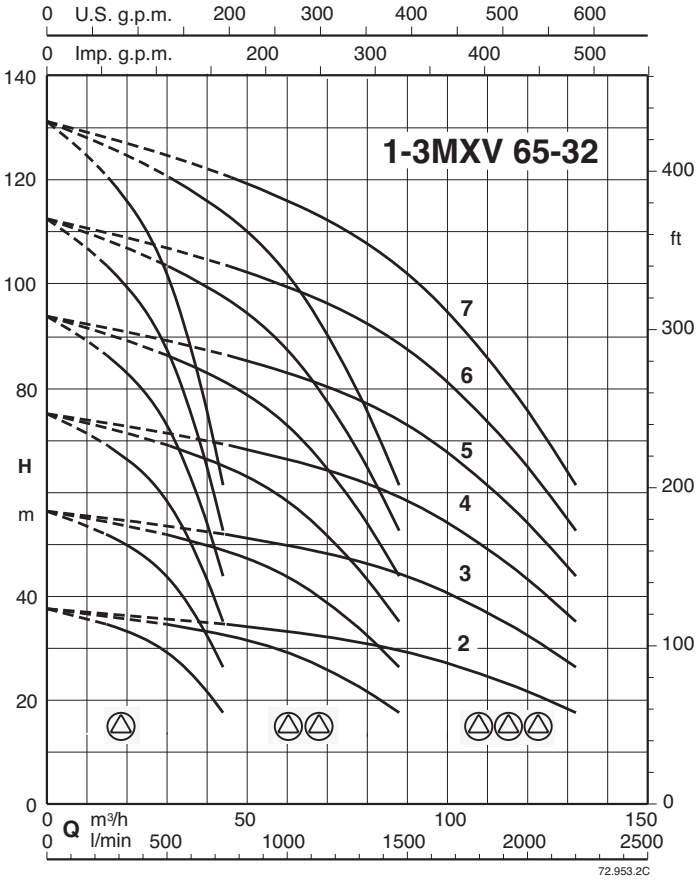

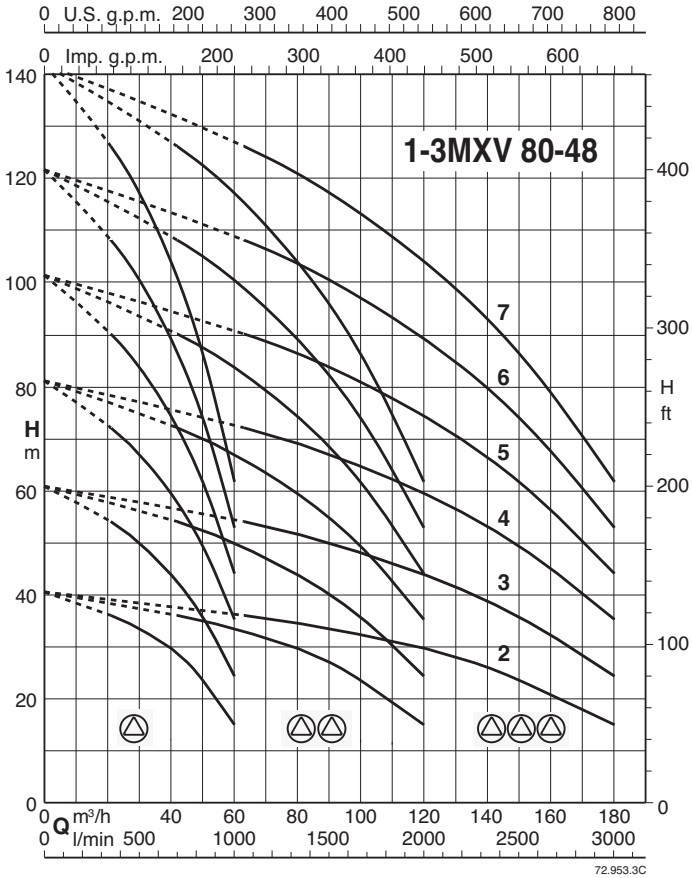

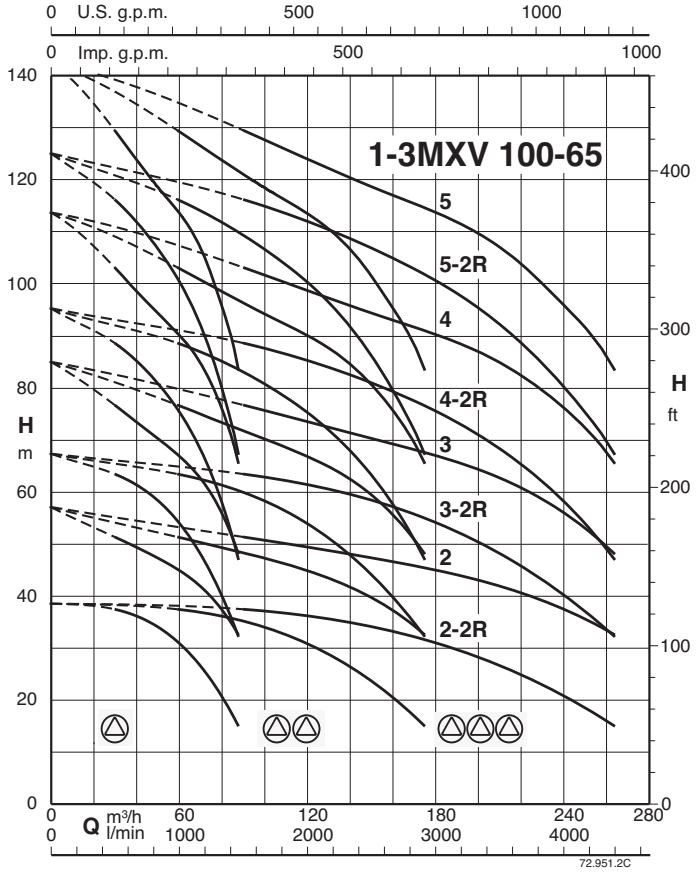

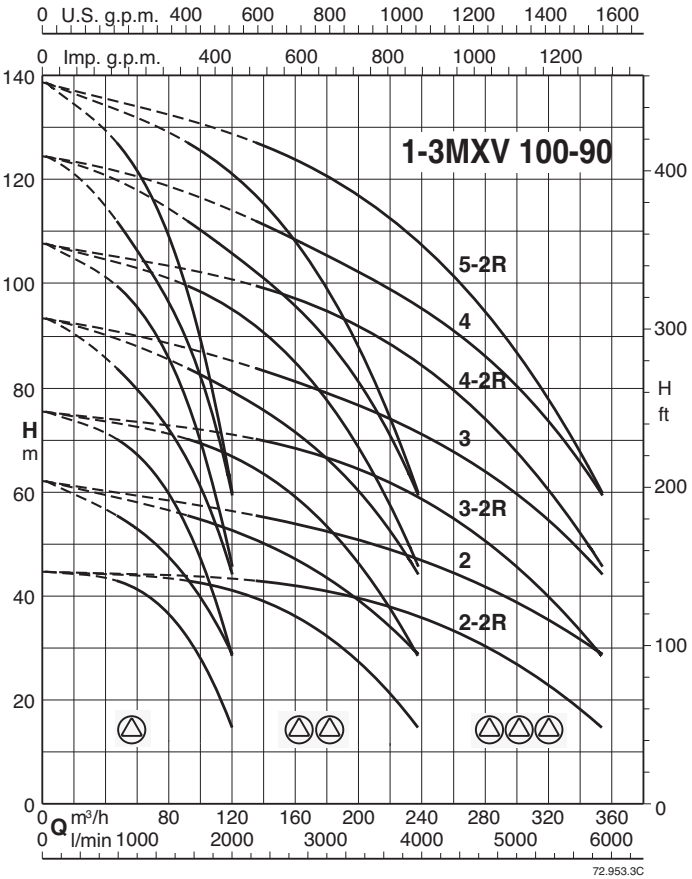

CALPEDA ROMANIA - INFINITY PUMPS SRL
Tel: 0268.33.47.47 / 0722.244.944
vanzari@calpeda.ro | www.calpeda.ro

BS. MXV

Pressure boosting sets with 1 to 3 Vertical Multi-Stage Pumps
Fixed speed pump or Variable speed pump (frequency converter)

calpeda®

Performance

BS1F BSM1F

Mains: 400V 3~ Motor: 400V 3~	Mains: 230V 1~ Motor: 230V 1~	Motor		Pres. switch 1 bar		Maximum capacity *		Vessel Membrane litre	Vessel litre
		kW	HP	min	max	**Q** l/min	**H** m		
BS1F 1MXV 25-204/C	**BSM1F 1MXV 25-204M/C**	0,75	1	2,5	4	62	25	40	100
BS1F 1MXV 25-205/C	**BSM1F 1MXV 25-205M/C**	0,75	1	3,5	5	56	36	50	100
BS1F 1MXV 25-206/D	**BSM1F 1MXV 25-206M/C**	1,1	1,5	4	6	59	41	50	100
BS1F 1MXV 25-207/D	**BSM1F 1MXV 25-207M/C**	1,1	1,5	5	7	55	51	60	100
BS1F 1MXV 25-208/D	**BSM1F 1MXV 25-208M/C**	1,5	2	6	8	51	61	100	100
BS1F 1MXV 25-210/D		1,5	2	6,5	8,5	60	66	100	200
BS1F 1MXV 25-212/D		2,2	3	8	10	59	82	200	200
BS1F 1MXV 32-404/D	**BSM1F 1MXV 32-404M/C**	1,1	1,5	2,3	3,8	114	23	100	100
BS1F 1MXV 32-405/D	**BSM1F 1MXV 32-405M/C**	1,1	1,5	3,4	4,9	103	35	100	200
BS1F 1MXV 32-406/D	**BSM1F 1MXV 32-406M/C**	1,5	2	4	6	105	41	100	200
BS1F 1MXV 32-407/D	**BSM1F 1MXV 32-407M/C**	1,5	2	5	7	99	51	100	200
BS1F 1MXV 32-408/D		2,2	3	6	8	93	61	200	300
BS1F 1MXV 32-410/D		2,2	3	7	9	101	71	300	500
BS1F 1MXV 32-412/C		3	4	8,5	10,5	100	87	300	500
BS1F 1MXV 40-804/D	**BSM1F 1MXV 40-804M/C**	1,5	2	2,5	4	214	25	200	300
BS1F 1MXV 40-805/D		2,2	3	3,5	5	211	36	300	500
BS1F 1MXV 40-806/D		2,2	3	4	6	211	41	300	500
BS1F 1MXV 40-807/C		3	4	5	7	208	51	500	800
BS1F 1MXV 40-808/C		3	4	6	8	199	61	500	800
BS1F 1MXV 40-810/D		4	5,5	8	10	188	82	1000	1000
BS1F 1MXV 40-811/D		4	5,5	9	11	183	92	1000	1000
BS1F 1MXV 50-1603/C		3	4	3	4,5	367	31	500	800
BS1F 1MXV 50-1604/D		4	5,5	4	6	371	41	750	1000
BS1F 1MXV 50-1605/C		5,5	7,5	5,5	7,5	343	56	1000	1500
BS1F 1MXV 50-1606/C		5,5	7,5	6,5	9	348	66	1000	1500
BS1F 1MXV 50-1607/C		7,5	10	7,5	9,5	353	76	1500	2000
BS1F 1MXV 50-1608/C		7,5	10	8,5	11,5	353	87	1500	2000
BS1F 1MXV 65-3202/D		4	5,5	2	3	704	20	1000	2000
BS1F 1MXV 65-3203/C		5,5	7,5	3,3	4,8	670	34	1500	3000
BS1F 1MXV 65-3204/C		7,5	10	4,5	6,5	662	46	1500	3000
BS1F 1MXV 65-3205/D		11	15	6	8	627	61	2000	4000
BS1F 1MXV 65-3206/D		11	15	6,5	9,5	682	66	3000	4000
BS1F 1MXV 65-3207/D		15	20	7,5	10,5	683	76	4000	5000
BS1F 1MXV 80-4802/C		5,5	7,5	2	3,2	917	20	1500	3000
BS1F 1MXV 80-4803/C		7,5	10	3,5	5	840	36	2000	3000
BS1F 1MXV 80-4804/D		11	15	4,5	6,5	894	46	3000	4000
BS1F 1MXV 80-4805/D		15	20	6	8	848	61	4000	5000
BS1F 1MXV 80-4806/D		15	20	6,5	9,5	911	66	5000	-
BS1F 1MXV 80-4807/E		18,5	25	8	11	882	82	5000	-

* Maximum pumps flow at minimum setting pressure switch.

CALPEDA ROMANIA - INFINITY PUMPS SRL
Tel: 0268.33.47.47 / 0722.244.944
vanzari@calpeda.ro | www.calpeda.ro

BS. MXV

Pressure boosting sets with 1 to 3 Vertical Multi-Stage Pumps
Fixed speed pump or Variable speed pump (frequency converter)

Performance

BS2F BSM2F

Mains: 400V 3~ Motor: 400V 3~	Mains: 230V 1~ Motor: 230V 1~	Motor		Pres. switch 1 bar		Pres. switch 2 bar		Maximum capacity *		Vessel Membrane	Vessel
		kW	HP	min	max	min	max	Q l/min	H m	litre	litre
BS2F 2MXV 25-204/C	**BSM2F 2MXV 25-204M/C**	0,75 x2	1 x2	2,5	4	2,2	3,7	135	22	40	100
BS2F 2MXV 25-205/C	**BSM2F 2MXV 25-205M/C**	0,75 x2	1 x2	3,5	5	3	4,5	128	31	50	100
BS2F 2MXV 25-206/D	**BSM2F 2MXV 25-206M/C**	1,1 x2	1,5 x2	4	6	3,5	5,5	130	36	50	100
BS2F 2MXV 25-207/D	**BSM2F 2MXV 25-207M/C**	1,1 x2	1,5 x2	5	7	4,5	6,5	122	46	60	100
BS2F 2MXV 25-208/D	**BSM2F 2MXV 25-208M/C**	1,5 x2	2 x2	6	8	5,5	7,5	113	56	100	100
BS2F 2MXV 25-210/D		1,5 x2	2 x2	6,5	8,5	6	8	128	61	100	200
BS2F 2MXV 25-212/D		2,2 x2	3 x2	8	10	7,5	9,5	125	76	200	200
BS2F 2MXV 32-404/D	**BSM2F 2MXV 32-404M/C**	1,1 x2	1,5 x2	2,3	3,8	1,8	3,3	253	18	100	100
BS2F 2MXV 32-405/D	**BSM2F 2MXV 32-405M/C**	1,1 x2	1,5 x2	3,4	4,9	3	4,5	226	31	100	200
BS2F 2MXV 32-406/D	**BSM2F 2MXV 32-406M/C**	1,5 x2	2 x2	4	6	3,5	5,5	232	36	100	200
BS2F 2MXV 32-407/D	**BSM2F 2MXV 32-407M/C**	1,5 x2	2 x2	5	7	4,5	6,5	218	46	100	200
BS2F 2MXV 32-408/D		2,2 x2	3 x2	6	8	5,5	7,5	205	56	200	300
BS2F 2MXV 32-410/D		2,2 x2	3 x2	7	9	6,5	8,5	216	66	300	500
BS2F 2MXV 32-412/C		3 x2	4 x2	8,5	10,5	8	10	213	82	300	500
BS2F 2MXV 40-804/D	**BSM2F 2MXV 40-804M/C**	1,5 x2	2 x2	2,5	4	2,2	3,7	435	22	200	300
BS2F 2MXV 40-805/D		2,2 x2	3 x2	3,5	5	3	4,5	438	31	300	500
BS2F 2MXV 40-806/D		2,2 x2	3 x2	4	6	3,5	5,5	435	36	300	500
BS2F 2MXV 40-807/C		3 x2	4 x2	5	7	4,5	6,5	434	46	500	800
BS2F 2MXV 40-808/C		3 x2	4 x2	6	8	5,5	7,5	418	56	500	800
BS2F 2MXV 40-810/D		4 x2	5,5 x2	8	10	7,5	9,5	399	76	1000	1000
BS2F 2MXV 40-811/D		4 x2	5,5 x2	9	11	8,5	10,5	390	87	1000	1000
BS2F 2MXV 50-1603/C		3 x2	4 x2	3	4,5	2,5	4	785	25	500	800
BS2F 2MXV 50-1604/D		4 x2	5,5 x2	4	6	3,5	5,5	782	36	750	1000
BS2F 2MXV 50-1605/C		5,5 x2	7,5 x2	5,5	7,5	5	7	734	51	1000	1500
BS2F 2MXV 50-1606/C		5,5 x2	7,5 x2	6,5	9	6	8,5	734	61	1000	1500
BS2F 2MXV 50-1607/C		7,5 x2	10 x2	7,5	9,5	7	9	739	71	1500	2000
BS2F 2MXV 50-1608/C		7,5 x2	10 x2	8,5	11,5	8	11	734	82	1500	2000
BS2F 2MXV 65-3202/D		4 x2	5,5 x2	2	3	1,7	2,7	1464	17	1000	2000
BS2F 2MXV 65-3203/C		5,5 x2	7,5 x2	3,3	4,8	2,8	4,3	1439	29	1500	3000
BS2F 2MXV 65-3204/C		7,5 x2	10 x2	4,5	6,5	4	6	1411	41	1500	3000
BS2F 2MXV 65-3205/D		11 x2	15 x2	6	8	5,5	7,5	1344	56	2000	4000
BS2F 2MXV 65-3206/D		11 x2	15 x2	6,5	9,5	6	9	1417	61	3000	4000
BS2F 2MXV 65-3207/D		15 x2	20 x2	7,5	10,5	7	10	1411	71	4000	5000
BS2F 2MXV 80-4802/C		5,5 x2	7,5 x2	2	3,2	1,6	2,8	1979	16	1500	3000
BS2F 2MXV 80-4803/C		7,5 x2	10 x2	3,5	5	3	4,5	1852	31	2000	3000
BS2F 2MXV 80-4804/D		11 x2	15 x2	4,5	6,5	4	6	1905	41	3000	4000
BS2F 2MXV 80-4805/D		15 x2	20 x2	6	8	5,5	7,5	1809	56	4000	5000
BS2F 2MXV 80-4806/D		15 x2	20 x2	6,5	9,5	6	9	1901	61	5000	-
BS2F 2MXV 80-4807/E		18,5 x2	25 x2	8	11	7,5	10,5	1838	76	5000	-
BS2F 2MXV 100-6502-2R		7,5 x2	10 x2	2,2	2,8	1,9	2,5	2754	19	3000	-
BS2F 2MXV 100-6502		11 x2	15 x2	3,8	4,4	3,5	4,1	2783	36	-	-
BS2F 2MXV 100-6503-2R		15 x2	20 x2	4,3	4,9	4	4,6	3257	41	-	-
BS2F 2MXV 100-6503/A		18,5 x2	25 x2	5,8	6,7	5,3	6,2	2765	54	-	-
BS2F 2MXV 100-6504-2R/A		18,5 x2	25 x2	7,2	8,4	6,6	7,8	2343	67	-	-
BS2F 2MXV 100-6504		22 x2	30 x2	7,7	8,9	7,1	8,3	2786	72	-	-
BS2F 2MXV 100-6505-2R		30 x2	40 x2	8,3	9,8	7,5	9	2771	76	-	-
BS2F 2MXV 100-6505		30 x2	40 x2	9,8	11,3	9	10,5	2782	92	-	-
BS2F 2MXV 100-9002-2R		11 x2	15 x2	2,9	3,9	2,4	3,4	3677	24	-	-
BS2F 2MXV 100-9002		15 x2	20 x2	3,7	5,2	3	4,5	3862	31	-	-
BS2F 2MXV 100-9003-2R/A		18,5 x2	25 x2	4,6	6,1	4,1	5,6	3635	42	-	-
BS2F 2MXV 100-9003		22 x2	30 x2	6,2	7,7	5,4	6,9	3620	55	-	-
BS2F 2MXV 100-9004-2R		30 x2	40 x2	7,4	8,9	6,6	8,1	3474	67	-	-
BS2F 2MXV 100-9004		30 x2	40 x2	8,5	10	7,8	9,3	3441	80	-	-
BS2F 2MXV 100-9005-2R		37 x2	50 x2	9,5	11	8,8	10,3	3350	90	-	-

* Maximum pumps flow at minimum setting pressure of 2 nd pressure switch.

CALPEDA ROMANIA - INFINITY PUMPS SRL
Tel: 0268.33.47.47 / 0722.244.944
vanzari@calpeda.ro | www.calpeda.ro

BS. MXV

Pressure boosting sets with 1 to 3 Vertical Multi-Stage Pumps
Fixed speed pump or Variable speed pump (frequency converter)

calpeda®

Performance

BS3F

Mains: 400V 3~ Motor: 400V 3~	Motor		Pres. switch 1 bar		Pres. switch 2 bar		Pres. switch 3 bar		Maximum capacity *		Vessel Membrane	Vessel
	kW	HP	min	max	min	max	min	max	**Q** l/min	**H** m	litre	litre
BS3F 3MXV 25-204/C	0,75 x3	1 x3	2,5	4	2,2	3,7	1,9	3,4	216	19	40	100
BS3F 3MXV 25-205/C	0,75 x3	1 x3	3,5	5	3	4,5	2,5	4	212	25	50	100
BS3F 3MXV 25-206/D	1,1 x3	1,5 x3	4	6	3,5	5,5	3	5	211	31	50	100
BS3F 3MXV 25-207/D	1,1 x3	1,5 x3	5	7	4,5	6,5	4	6	199	41	60	100
BS3F 3MXV 25-208/D	1,5 x3	2 x3	6	8	5,5	7,5	5	7	186	51	100	100
BS3F 3MXV 25-210/D	1,5 x3	2 x3	6,5	8,5	6	8	5,5	7,5	203	56	100	200
BS3F 3MXV 25-212/D	2,2 x3	3 x3	8	10	7,5	9,5	7	9	196	71	200	200
BS3F 3MXV 32-404/D	1,1 x3	1,5 x3	2,3	3,8	1,8	3,3	1,3	2,8	406	13	100	100
BS3F 3MXV 32-405/D	1,1 x3	1,5 x3	3,4	4,9	3	4,5	2,6	4,1	365	27	100	200
BS3F 3MXV 32-406/D	1,5 x3	2 x3	4	6	3,5	5,5	3	5	372	31	100	200
BS3F 3MXV 32-407/D	1,5 x3	2 x3	5	7	4,5	6,5	4	6	353	41	100	200
BS3F 3MXV 32-408/D	2,2 x3	3 x3	6	8	5,5	7,5	5	7	332	51	200	300
BS3F 3MXV 32-410/D	2,2 x3	3 x3	7	9	6,5	8,5	6	8	343	61	300	500
BS3F 3MXV 32-412/C	3 x3	4 x3	8,5	10,5	8	10	7,5	9,5	335	76	300	500
BS3F 3MXV 40-804/D	1,5 x3	2 x3	2,5	4	2,2	3,7	1,9	3,4	643	19	200	300
BS3F 3MXV 40-805/D	2,2 x3	3 x3	3,5	5	3	4,5	2,5	4	648	25	300	500
BS3F 3MXV 40-806/D	2,2 x3	3 x3	4	6	3,5	5,5	3	5	649	31	300	500
BS3F 3MXV 40-807/C	3 x3	4 x3	5	7	4,5	6,5	4	6	658	41	500	800
BS3F 3MXV 40-808/C	3 x3	4 x3	6	8	5,5	7,5	5	7	647	51	500	800
BS3F 3MXV 40-810/D	4 x3	5,5 x3	8	10	7,5	9,5	7	9	624	71	1000	1000
BS3F 3MXV 40-811/D	4 x3	5,5 x3	9	11	8,5	10,5	8	10	613	82	1000	1000
BS3F 3MXV 50-1603/C	3 x3	4 x3	3	4,5	2,5	4	2	3,5	1201	20	500	800
BS3F 3MXV 50-1604/D	4 x3	5,5 x3	4	6	3,5	5,5	3	5	1200	31	750	1000
BS3F 3MXV 50-1605/C	5,5 x3	7,5 x3	5,5	7,5	5	7	4,5	6,5	1153	46	1000	1500
BS3F 3MXV 50-1606/C	5,5 x3	7,5 x3	6,5	9	6	8,5	5,5	8	1146	56	1000	1500
BS3F 3MXV 50-1607/C	7,5 x3	10 x3	7,5	9,5	7	9	6,5	8,5	1147	66	1500	2000
BS3F 3MXV 50-1608/C	7,5 x3	10 x3	8,5	11,5	8	11	7,5	10,5	1136	76	1500	2000
BS3F 3MXV 65-3202/D	4 x3	5,5 x3	2	3	1,7	2,7	1,4	2,4	2200	14	1000	2000
BS3F 3MXV 65-3203/C	5,5 x3	7,5 x3	3,3	4,8	2,8	4,3	2,3	3,8	2208	23	1500	3000
BS3F 3MXV 65-3204/C	7,5 x3	10 x3	4,5	6,5	4	6	3,5	5,5	2194	36	1500	3000
BS3F 3MXV 65-3205/D	11 x3	15 x3	6	8	5,5	7,5	5	7	2117	51	2000	4000
BS3F 3MXV 65-3206/D	11 x3	15 x3	6,5	9,5	6	9	5,5	8,5	2178	56	3000	4000
BS3F 3MXV 65-3207/D	15 x3	20 x3	7,5	10,5	7	10	6,5	9,5	2168	66	4000	5000
BS3F 3MXV 80-4802/C	5,5 x3	7,5 x3	2	3,2	1,6	2,8	1,2	2,4	3091	12	1500	3000
BS3F 3MXV 80-4803/C	7,5 x3	10 x3	3,5	5	3	4,5	2,5	4	2971	25	2000	3000
BS3F 3MXV 80-4804/D	11 x3	15 x3	4,5	6,5	4	6	3,5	5,5	2987	36	3000	4000
BS3F 3MXV 80-4805/D	15 x3	20 x3	6	8	5,5	7,5	5	7	2854	51	4000	5000
BS3F 3MXV 80-4806/D	15 x3	20 x3	6,5	9,5	6	9	5,5	8,5	2950	56	5000	-
BS3F 3MXV 80-4807/E	18,5 x3	25 x3	8	11	7,5	10,5	7	10	2855	71	5000	-
BS3F 3MXV 100-6502-2R	7,5 x3	10 x3	2,2	2,8	1,9	2,5	1,6	2,2	4312	19	-	-
BS3F 3MXV 100-6502	11 x3	15 x3	3,8	4,4	3,5	4,1	3,2	3,8	4334	36	-	-
BS3F 3MXV 100-6503-2R	15 x3	20 x3	4,3	4,9	4	4,6	3,7	4,3	4584	41	-	-
BS3F 3MXV 100-6503/A	18,5 x3	25 x3	5,8	6,7	5,3	6,2	4,9	5,8	4293	54	-	-
BS3F 3MXV 100-6504-2R/A	18,5 x3	25 x3	7,2	8,4	6,6	7,8	6	7,2	3881	67	-	-
BS3F 3MXV 100-6504	22 x3	30 x3	7,7	8,9	7,1	8,3	6,5	7,7	4319	72	-	-
BS3F 3MXV 100-6505-2R	30 x3	40 x3	8,3	9,8	7,5	9	6,8	8,3	4309	76	-	-
BS3F 3MXV 100-6505	30 x3	40 x3	9,8	11,3	9	10,5	8,3	9,8	4315	92	-	-
BS3F 3MXV 100-9002-2R	11 x3	15 x3	2,9	3,9	2,4	3,4	1,9	2,9	5831	24	-	-
BS3F 3MXV 100-9002	15 x3	20 x3	3,7	5,2	3	4,5	2,3	3,8	6046	31	-	-
BS3F 3MXV 100-9003-2R/A	18,5 x3	25 x3	4,6	6,1	4,1	5,6	3,4	4,9	5791	42	-	-
BS3F 3MXV 100-9003	22 x3	30 x3	6,2	7,7	5,4	6,9	4,7	6,2	5800	55	-	-
BS3F 3MXV 100-9004-2R	30 x3	40 x3	7,4	8,9	6,6	8,1	5,9	7,4	5571	67	-	-
BS3F 3MXV 100-9004	30 x3	40 x3	8,5	10	7,8	9,3	7,1	8,6	5542	80	-	-
BS3F 3MXV 100-9005-2R	37 x3	50 x3	9,5	11	8,8	10,3	8,1	9,6	5364	90	-	-

* Maximum pumps flow at minimum setting pressure of 3 nd pressure switch.

CALPEDA ROMANIA - INFINITY PUMPS SRL
Tel: 0268.33.47.47 / 0722.244.944
vanzari@calpeda.ro | www.calpeda.ro

BS. MXV

Pressure boosting sets with 1 to 3 Vertical Multi-Stage Pumps
Fixed speed pump or Variable speed pump (frequency converter)

calpeda®

Performance

BS..

PUMPS Nos						PUMP TYPE	P_2 For each pump	
1	2	3	4	5	6		kW	HP
BS1V	BS2V BS1V1F BSM1V1F* BSM2V**	BS3V BS1V2F	BS4V BS1V3F	BS5V BS1V4F	BS6V BS1V5F	MXV 25-204/C	0,75	1
						MXV 25-205/C	0,75	1
						MXV 25-206/D	1,1	1,5
						MXV 25-207/D	1,1	1,5
						MXV 25-208/D	1,5	2
						MXV 25-210/D	1,5	2
						MXV 25-212/D	2,2	3
						MXV 32-404/D	1,1	1,5
						MXV 32-405/D	1,1	1,5
						MXV 32-406/D	1,5	2
						MXV 32-407/D	1,5	2
						MXV 32-408/D	2,2	3
						MXV 32-410/D	2,2	3
						MXV 32-412/C	3	4
						MXV 40-804/D	1,5	2
						MXV 40-805/D	2,2	3
						MXV 40-806/D	2,2	3
						MXV 40-807/C	3	4
						MXV 40-808/C	3	4
						MXV 40-810/D	4	5,5
						MXV 40-811/D	4	5,5
						MXV 50-1603/C	3	4
						MXV 50-1604/D	4	5,5
						MXV 50-1605/C	5,5	7,5
						MXV 50-1606/C	5,5	7,5
						MXV 50-1607/C	7,5	10
						MXV 50-1608/C	7,5	10
						MXV 65-3202/D	4	5,5
						MXV 65-3203/C	5,5	7,5
						MXV 65-3204/C	7,5	10
						MXV 65-3205/D	11	15
						MXV 65-3206/D	11	15
						MXV 65-3207/D	15	20
						MXV 80-4802/C	5,5	7,5
						MXV 80-4803/C	7,5	10
						MXV 80-4804/D	11	15
						MXV 80-4805/D	15	20
						MXV 80-4806/D	15	20
						MXV 80-4807/E	18,5	25
						MXV 100-6502-2R	7,5	10
						MXV 100-6502	11	15
						MXV 100-6503-2R	15	20
						MXV 100-6503/A	18,5	25
						MXV 100-6504-2R/A	18,5	25
						MXV 100-6504	22	30
						MXV 100-6505-2R	30	40
						MXV 100-6505	30	40
						MXV 100-9002-2R	11	15
						MXV 100-9002	15	20
						MXV 100-9003-2R/A	18,5	25
						MXV 100-9003	22	30
						MXV 100-9004-2R	30	40
						MXV 100-9004	30	40
						MXV 100-9005-2R	37	50

(*) SYSTEMS WITH:
1 variable speed pump three-phase motor
1 fixed speed pump single-phase motor
Power supply to control panel 230 V single-phase

(**) Three-phase motor 230 V.
Power supply to control panel:
- 230 V three-phase
- 230 V single-phase
Frequency converter output is alwais 230 V three-phase.

BS.. ..-ITT

PUMPS Nos		PUMP TYPE	P_2 For each pump	
2	3		kW	HP
BS2V -ITT	BS3V -ITT	MXV 25-204/C-ITT	0,75	1
		MXV 25-205/C-ITT	0,75	1
		MXV 25-206/D-ITT	1,1	1,5
		MXV 25-207/D-ITT	1,1	1,5
		MXV 25-208/D-ITT	1,5	2
		MXV 25-210/D-ITT	1,5	2
		MXV 25-212/D-ITT	2,2	3
		MXV 32-404/D-ITT	1,1	1,5
		MXV 32-405/D-ITT	1,1	1,5
		MXV 32-406/D-ITT	1,5	2
		MXV 32-407/D-ITT	1,5	2
		MXV 32-408/D-ITT	2,2	3
		MXV 32-410/D-ITT	2,2	3
		MXV 32-412/C-ITT	3	4
		MXV 40-804/D-ITT	1,5	2
		MXV 40-805/D-ITT	2,2	3
		MXV 40-806/D-ITT	2,2	3
		MXV 40-807/C-ITT	3	4
		MXV 40-808/C-ITT	3	4
		MXV 40-810/D-ITT	4	5,5
		MXV 40-811/D-ITT	4	5,5
		MXV 50-1603/C-ITT	3	4
		MXV 50-1604/D-ITT	4	5,5
		MXV 50-1605/C-ITT	5,5	7,5
		MXV 50-1606/C-ITT	5,5	7,5
		MXV 50-1607/C-ITT	7,5	10
		MXV 50-1608/C-ITT	7,5	10
		MXV 65-3202/D-ITT	4	5,5
		MXV 65-3203/C-ITT	5,5	7,5
		MXV 65-3204/C-ITT	7,5	10
		MXV 65-3205/D-ITT	11	15
		MXV 65-3206/D-ITT	11	15
		MXV 65-3207/D-ITT	15	20
		MXV 80-4801/D-ITT	4	5,5
		MXV 80-4802/C-ITT	5,5	7,5
		MXV 80-4803/C-ITT	7,5	10
		MXV 80-4804/D-ITT	11	15
		MXV 80-4805/D-ITT	15	20
		MXV 80-4806/D-ITT	15	20
		MXV 80-4807/E-ITT	18,5	25
		MXV 100-6501-ITT	5,5	7,5
		MXV 100-6502-2R-ITT	7,5	10
		MXV 100-6502-ITT	11	15
		MXV 100-6503-2R-ITT	15	20
		MXV 100-6503/A-ITT	18,5	25
		MXV 100-6504-2R/A-ITT	18,5	25
		MXV 100-6504-ITT	22	30
		MXV 100-9001-1R-ITT	5,5	7,5
		MXV 100-9001-ITT	7,5	10
		MXV 100-9002-2R-ITT	11	15
		MXV 100-9002-ITT	15	20
		MXV 100-9003-2R/A-ITT	18,5	25
		MXV 100-9003-ITT	22	30

CALPEDA ROMANIA - INFINITY PUMPS SRL
Tel: 0268.33.47.47 / 0722.244.944
vanzari@calpeda.ro | www.calpeda.ro

BS. MXV

Pressure boosting sets with 1 to 3 Vertical Multi-Stage Pumps
Fixed speed pump or Variable speed pump (frequency converter)

Dimensions and weights

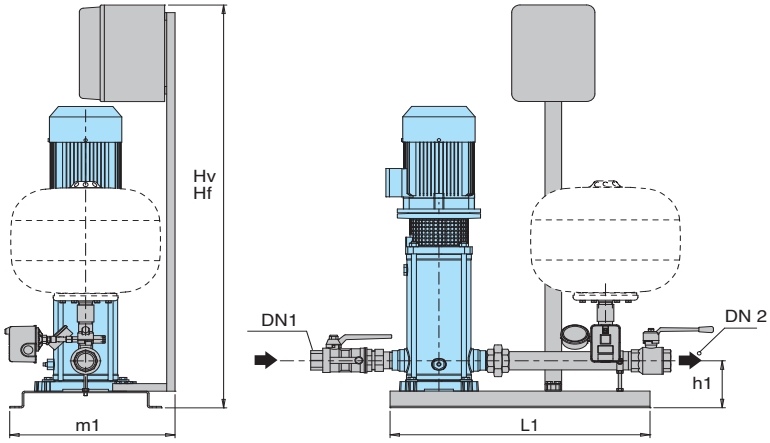

TYPE	TYPE	Connection		mm					weight
		DN 1	DN 2	Hv	Hf	h1	L1	m1	kg
BS1. 1MXV 25-204/C	**BSM1. 1MXV 25-204M**	G 1	G 1	1345	1065	120	625	410	-
BS1. 1MXV 25-205/C	**BSM1. 1MXV 25-205M**								
BS1. 1MXV 25-206/D	**BSM1. 1MXV 25-206M**								
BS1. 1MXV 25-207/D	**BSM1. 1MXV 25-207M**								
BS1. 1MXV 25-208/D	**BSM1. 1MXV 25-208M**								
BS1. 1MXV 25-210/D									
BS1. 1MXV 25-212/C									
BS1. 1MXV 32-404/D	**BSM1. 1MXV 32-404M**	G 1 1/4	G 1 1/4	1345	1065	120	625	410	
BS1. 1MXV 32-405/D	**BSM1. 1MXV 32-405M**								
BS1. 1MXV 32-406/D	**BSM1. 1MXV 32-406M**								
BS1. 1MXV 32-407/C	**BSM1. 1MXV 32-407M**								
BS1. 1MXV 32-408/C									
BS1. 1MXV 32-410/D									
BS1. 1MXV 32-412/D									
BS1. 1MXV 40-804/D	**BSM1. 1MXV 40-804M**	G 1 1/2	G 1 1/2	1345	1065	125	625	410	
BS1. 1MXV 40-805/D									
BS1. 1MXV 40-806/D									
BS1. 1MXV 40-807/D									
BS1. 1MXV 40-808/D									
BS1. 1MXV 40-810/D									
BS1. 1MXV 40-811/D									

Dimensions not binding to be verified when ordering

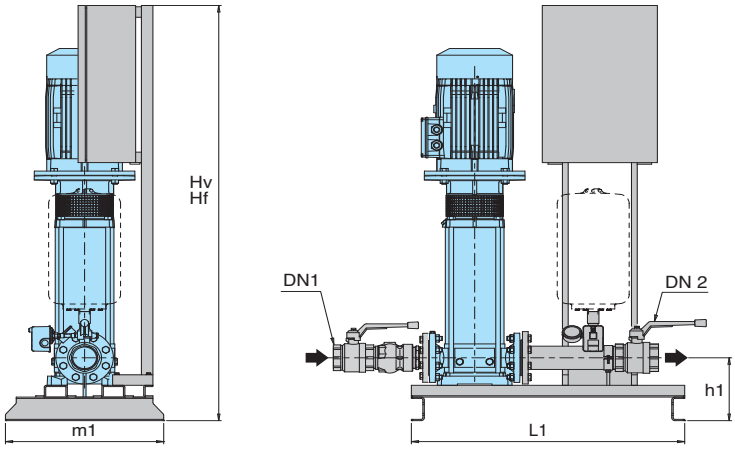

TYPE	Connection		mm					weight
	DN 1	DN 2	Hv	Hf	h1	L1	m1	kg
BS1. 1MXV 50-1603/C	G 2	G 2	1485	1155	225	950	550	
BS1. 1MXV 50-1604/D								
BS1. 1MXV 50-1605/C			1585					
BS1. 1MXV 50-1606/C								
BS1. 1MXV 50-1607/C				1585				
BS1. 1MXV 50-1608/C								
BS1. 1MXV 65-3202/D	G 2 1/2	G 2 1/2	1485	1155	240	950	550	
BS1. 1MXV 65-3203/C			1585					
BS1. 1MXV 65-3204/C				1585				
BS1. 1MXV 65-3205/D			1685					
BS1. 1MXV 65-3206/D								
BS1. 1MXV 65-3207/D								
BS1. 1MXV 80-4802/C	G3	G3	1585	1155	240	950	550	
BS1. 1MXV 80-4803/C				1585				
BS1. 1MXV 80-4804/D			1685					
BS1. 1MXV 80-4805/D								
BS1. 1MXV 80-4806/D								
BS1. 1MXV 80-4807/E			1785					

Dimensions not binding to be verified when ordering

CALPEDA ROMANIA - INFINITY PUMPS SRL
Tel: 0268.33.47.47 / 0722.244.944
vanzari@calpeda.ro | www.calpeda.ro

BS. MXV

Pressure boosting sets with 1 to 3 Vertical Multi-Stage Pumps
Fixed speed pump or Variable speed pump (frequency converter)

Dimensions and weights

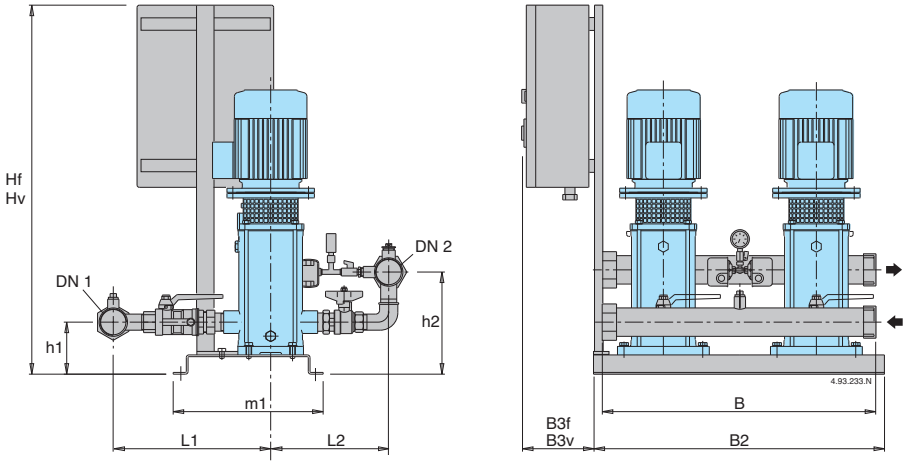

TYPE	TYPE	Connection		mm											weight
		DN 1	DN 2	Hf	Hv	h1	h2	L1	L2	m1	B	B2	B3f	B3v	kg
BS.. 2MXV 25-204/C	**BS.. 2MXV 25-204M**														110
BS.. 2MXV 25-205/C	**BS.. 2MXV 25-205M**														112
BS.. 2MXV 25-206/D	**BS.. 2MXV 25-206M**														114
BS.. 2MXV 25-207/D	**BS.. 2MXV 25-207M**	G 1 1/2	G 1 1/2	875	1145	119	218	335	254	365	600	625	195	260	116
BS.. 2MXV 25-208/D	**BS.. 2MXV 25-208M**														126
BS.. 2MXV 25-210/D	**BS.. 2MXV 25-210M**														
BS.. 2MXV 25-212/C	**BS.. 2MXV 25-212M**														
BS.. 2MXV 32-404/D	**BS.. 2MXV 32-404M**														113
BS.. 2MXV 32-405/D	**BS.. 2MXV 32-405M**														115
BS.. 2MXV 32-406/D	**BS.. 2MXV 32-406M**														125
BS.. 2MXV 32-407/C	**BS.. 2MXV 32-407M**	G 2	G 2	875	1145	119	225	360	295	365	600	625	195	260	127
BS.. 2MXV 32-408/C															137
BS.. 2MXV 32-410/D															
BS.. 2MXV 32-412/D															
BS.. 2MXV 40-804/D	**BS.. 2MXV 40-804M**														126
BS.. 2MXV 40-805/D															136
BS.. 2MXV 40-806/D															138
BS.. 2MXV 40-807/E		G 2 1/2	G 2 1/2	875	1145	124	245	400	305	365	600	625	195	260	164
BS.. 2MXV 40-808/D															166
BS.. 2MXV 40-810/D															
BS.. 2MXV 40-811/D															

Dimensions not binding to be verified when ordering

CALPEDA ROMANIA - INFINITY PUMPS SRL
Tel: 0268.33.47.47 / 0722.244.944
vanzari@calpeda.ro | www.calpeda.ro

BS. MXV

Pressure boosting sets with 1 to 3 Vertical Multi-Stage Pumps
Fixed speed pump or Variable speed pump (frequency converter)

Dimensions and weights

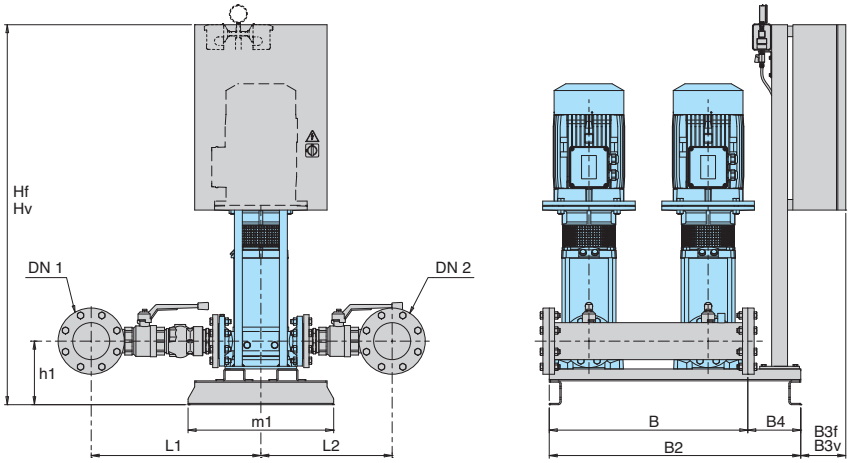

TYPE	Connection		mm											weight
	DN 1	DN 2	Hf	Hv	h1	L1	L2	m1	B	B2	B3f	B3v	B4	kg
BS.. 2MXV 50-1603/C	G 3	G 3	965	1445	225	455	355	550	700	950	160	170	225	282
BS.. 2MXV 50-1604/D														298
BS.. 2MXV 50-1605/C														336
BS.. 2MXV 50-1606/C														340
BS.. 2MXV 50-1607/C														
BS.. 2MXV 50-1608/C														
BS.. 2MXV 65-3202/D	100	100	965	1445	240	560	425	550	750	950	160	170	200	358
BS.. 2MXV 65-3203/C														396
BS.. 2MXV 65-3204/C			1445								170			420
BS.. 2MXV 65-3205/D				1545								220		480
BS.. 2MXV 65-3206/D														
BS.. 2MXV 65-3207/D														
BS.. 2MXV 80-4802/C	125	125	965	1445	240	640	500	550	750	950	160	170	200	408
BS.. 2MXV 80-4803/C														432
BS.. 2MXV 80-4804/D			1445								170	220		490
BS.. 2MXV 80-4805/D				1545										520
BS.. 2MXV 80-4806/D														
BS.. 2MXV 80-4807/E												270		
BS.. 2MXV 100-6502-2R	150	150	*	*	*	*	*	*	950	950	*	*	*	
BS.. 2MXV 100-6502														
BS.. 2MXV 100-6503-2R														
BS.. 2MXV 100-6503/A														
BS.. 2MXV 100-6504-2R/A														
BS.. 2MXV 100-6504														
BS.. 2MXV 100-6505-2R														
BS.. 2MXV 100-6505														
BS.. 2MXV 100-9002-2R	200	200	*	*	*	*	*	*	950	950	*	*	*	
BS.. 2MXV 100-9002														
BS.. 2MXV 100-9003-2R/A														
BS.. 2MXV 100-9003														
BS.. 2MXV 100-9004-2R														
BS.. 2MXV 100-9004														
BS.. 2MXV 100-9005-2R														

Dimensions not binding to be verified when ordering * Dimensions on request

CALPEDA ROMANIA - INFINITY PUMPS SRL
Tel: 0268.33.47.47 / 0722.244.944
vanzari@calpeda.ro | www.calpeda.ro

BS. MXV

Pressure boosting sets with 1 to 3 Vertical Multi-Stage Pumps
Fixed speed pump or Variable speed pump (frequency converter)

Dimensions and weights

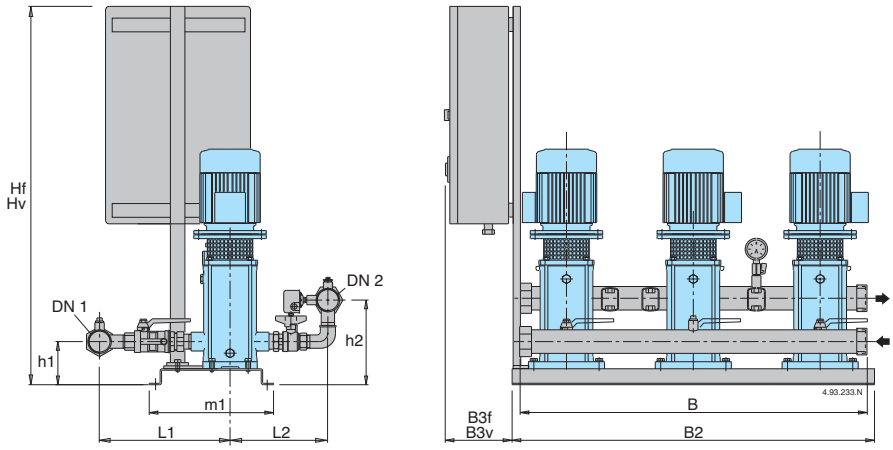

TYPE	Connection		mm											weight
	DN 1	DN 2	Hf	Hv	h1	h2	L1	L2	m1	B	B2	B3f	B3v	kg
BS.. 3MXV 25-204/C	G 2	G 2	1090	1160	134	233	340	254	406	950	1000	220	220	110
BS.. 3MXV 25-205/C														112
BS.. 3MXV 25-206/D														114
BS.. 3MXV 25-207/D														116
BS.. 3MXV 25-208/D														126
BS.. 3MXV 25-210/D														
BS.. 3MXV 25-212/C														
BS.. 3MXV 32-404/D	G 2 1/2	G 2 1/2	1090	1160	134	240	368	295	406	950	1000	220	220	113
BS.. 3MXV 32-405/D														115
BS.. 3MXV 32-406/D														125
BS.. 3MXV 32-407/C														127
BS.. 3MXV 32-408/C														137
BS.. 3MXV 32-410/D														
BS.. 3MXV 32-412/D														
BS.. 3MXV 40-804/D	G 3	G 3	1090	1160	139	260	405	305	406	950	1000	220	220	126
BS.. 3MXV 40-805/D														136
BS.. 3MXV 40-806/D														138
BS.. 3MXV 40-807/E														164
BS.. 3MXV 40-808/D														166
BS.. 3MXV 40-810/D														
BS.. 3MXV 40-811/D														

Dimensions not binding to be verified when ordering

CALPEDA ROMANIA - INFINITY PUMPS SRL
Tel: 0268.33.47.47 / 0722.244.944
vanzari@calpeda.ro | www.calpeda.ro

BS. MXV

Pressure boosting sets with 1 to 3 Vertical Multi-Stage Pumps
Fixed speed pump or Variable speed pump (frequency converter)

Dimensions and weights

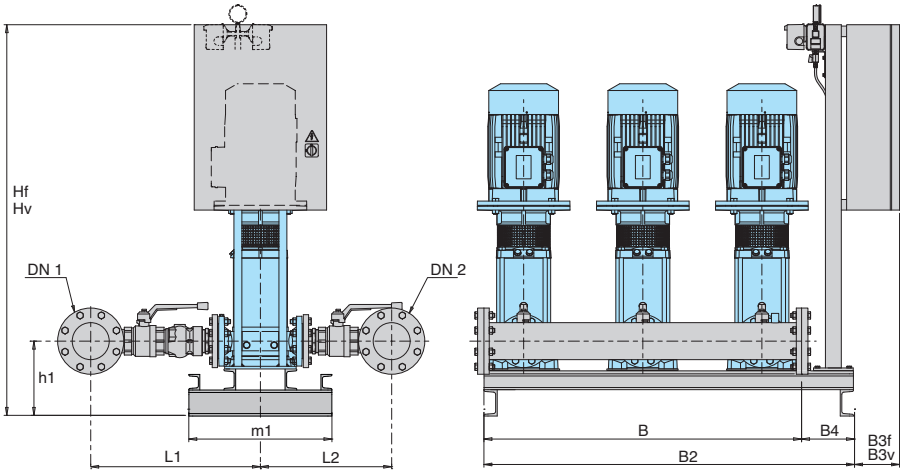

TYPE	Connection		mm											weight
	DN 1	DN 2	Hf	Hv	h1	L1	L2	m1	B	B2	B3f	B3v	B4	kg
BS.. 3MXV 50-1603/C	100	100	1160	1440	275	470	365	550	1200	1400	200	170	200	282
BS.. 3MXV 50-1604/D														298
BS.. 3MXV 50-1605/C				1540								220		336
BS.. 3MXV 50-1606/C														340
BS.. 3MXV 50-1607/C			1540								220			
BS.. 3MXV 50-1608/C														
BS.. 3MXV 65-3202/D	125	125	1160	1440	290	672	487	550	1200	1400	200	170	200	358
BS.. 3MXV 65-3203/C				1540								220		396
BS.. 3MXV 65-3204/C			1540								220			420
BS.. 3MXV 65-3205/D				*								*		480
BS.. 3MXV 65-3206/D														
BS.. 3MXV 65-3207/D														
BS.. 3MXV 80-4802/C	150	150	1160	1540	290	655	515	550	1200	1400	200	220	200	408
BS.. 3MXV 80-4803/C														432
BS.. 3MXV 80-4804/D			1540	*							220	*		490
BS.. 3MXV 80-4805/D														520
BS.. 3MXV 80-4806/D														
BS.. 3MXV 80-4807/E														
BS.. 3MXV 100-6502-2R	200	200	*		*	*	*	*	1500	*	*	*	*	
BS.. 3MXV 100-6502														
BS.. 3MXV 100-6503-2R														
BS.. 3MXV 100-6503/A														
BS.. 3MXV 100-6504-2R/A														
BS.. 3MXV 100-6504														
BS.. 3MXV 100-6505-2R														
BS.. 3MXV 100-6505														
BS.. 3MXV 100-9002-2R	250	250	*		*	*	*	*	1500	*	*	*	*	
BS.. 3MXV 100-9002														
BS.. 3MXV 100-9003-2R/A														
BS.. 3MXV 100-9003														
BS.. 3MXV 100-9004-2R														
BS.. 3MXV 100-9004														
BS.. 3MXV 100-9005-2R														

Dimensions not binding to be verified when ordering * Dimensions on request * Cabinet version

CALPEDA ROMANIA - INFINITY PUMPS SRL
Tel: 0268.33.47.47 / 0722.244.944
vanzari@calpeda.ro | www.calpeda.ro

BS. MXV. ITT

Pressure boosting sets with 2 to 3 vertical multi-stage pumps with I-MAT frequency converter

Dimensions and weights

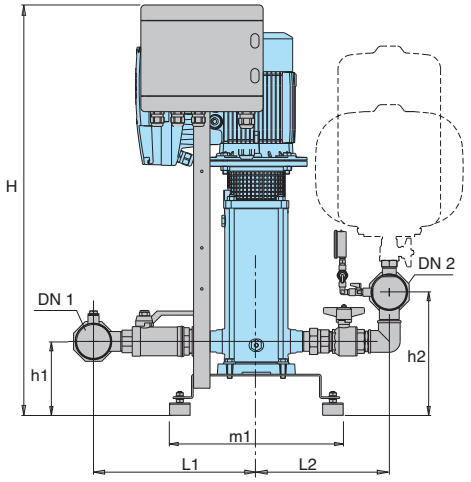

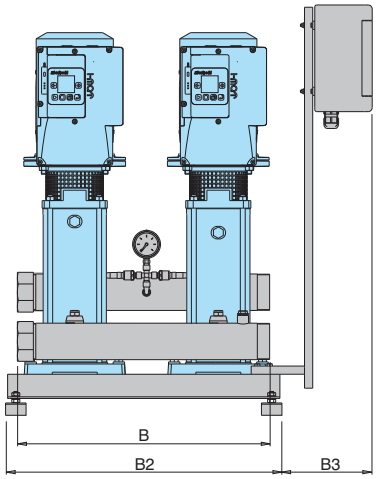

TYPE	Motor			Connection		mm									weight
	kW	HP	A	DN 1	DN 2	H	h1	h2	L1	L2	m1	B	B2	B3	kg
BS2V 2MXV 25-204/C-ITT	0,75 x2	1 x2	1,9 x2												
BS2V 2MXV 25-205/C-ITT	0,75 x2	1 x2	1,9 x2												105
BS2V 2MXV 25-206/D-ITT	1,1 x2	1,5 x2	2,7 x2												107
BS2V 2MXV 25-207/D-ITT	1,1 x2	1,5 x2	2,7 x2	G 1 1/2	G 1 1/2	887	148	224	336	287	332	600	625	185	109
BS2V 2MXV 25-208/D-ITT	1,5 x2	2 x2	4,3 x2												111
BS2V 2MXV 25-210/D-ITT	1,5 x2	2 x2	4,3 x2												118
BS2V 2MXV 25-212/D-ITT	2,2 x2	3 x2	5,3 x2												
BS2V 2MXV 32-404/D-ITT	1,1 x2	1,5 x2	2,7 x2												
BS2V 2MXV 32-405/D-ITT	1,1 x2	1,5 x2	2,7 x2												108
BS2V 2MXV 32-406/D-ITT	1,5 x2	2 x2	4,3 x2	G 2	G 2	887	148	239	336	287	332	600	625	185	111
BS2V 2MXV 32-407/D-ITT	1,5 x2	2 x2	4,3 x2												115
BS2V 2MXV 32-408/D-ITT	2,2 x2	3 x2	5,3 x2												118
BS2V 2MXV 32-410/D-ITT	2,2 x2	3 x2	5,3 x2												121
BS2V 2MXV 32-412/C-ITT	3 x2	4 x2	6,6 x2												
BS2V 2MXV 40-804/D-ITT	1,5 x2	2 x2	4,3 x2												
BS2V 2MXV 40-805/D-ITT	2,2 x2	3 x2	5,3 x2												116
BS2V 2MXV 40-806/D-ITT	2,2 x2	3 x2	5,3 x2	G 2 1/2	G 2 1/2	887	153	266	391	324	332	600	625	185	119
BS2V 2MXV 40-807/C-ITT	3 x2	4 x2	6,6 x2												121
BS2V 2MXV 40-808/C-ITT	3 x2	4 x2	6,6 x2												143
BS2V 2MXV 40-810/D-ITT	4 x2	5,5 x2	9,6 x2												145
BS2V 2MXV 40-811/D-ITT	4 x2	5,5 x2	9,6 x2												

Dimensions not binding to be verified when ordering

CALPEDA ROMANIA - INFINITY PUMPS SRL
Tel: 0268.33.47.47 / 0722.244.944
vanzari@calpeda.ro | www.calpeda.ro

BS. MXV. ITT

Pressure boosting sets with 2 to 3 vertical multi-stage pumps with I-MAT frequency converter

Dimensions and weights

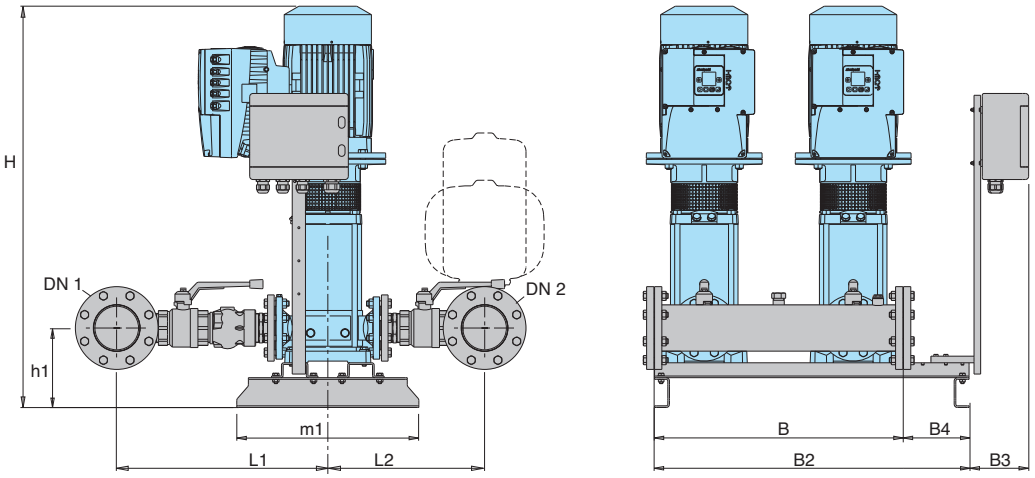

TYPE	Motor			Connection		mm									weight
	kW	HP	A	DN 1	DN 2	H	h1	L1	L2	m1	B	B2	B3	B4	kg
BS2V 2MXV 50-1603/C-ITT	3 x2	4 x2	6,6 x2	G 3	G 3	841	225	455	355	550	700	950	160	200	-
BS2V 2MXV 50-1604/D-ITT	4 x2	5,5 x2	9,6 x2			876									
BS2V 2MXV 50-1605/C-ITT	5,5 x2	7,5 x2	10,9 x2			958									
BS2V 2MXV 50-1606/C-ITT	5,5 x2	7,5 x2	10,9 x2			993									
BS2V 2MXV 50-1607/C-ITT	7,5 x2	10 x2	14,3 x2			1027									
BS2V 2MXV 50-1608/C-ITT	7,5 x2	10 x2	14,3 x2			1062									
BS2V 2MXV 65-3202/D-ITT	4 x2	5,5 x2	9,6 x2	100	100	853	240	560	425	550	750	950	160	200	
BS2V 2MXV 65-3203/C-ITT	5,5 x2	7,5 x2	10,9 x2			947									
BS2V 2MXV 65-3204/C-ITT	7,5 x2	10 x2	14,3 x2			993							170		
BS2V 2MXV 65-3205/D-ITT	11 x2	15 x2	21,5 x2			1189									
BS2V 2MXV 65-3206/D-ITT	11 x2	15 x2	21,5 x2			1235									
BS2V 2MXV 65-3207/D-ITT	15 x2	20 x2	27,3 x 2			1281									
BS2V 2MXV 80-4801/D-ITT	4 x2	5,5 x2	9,6 x2	125	125	857	240	640	500	550	750	950	160	200	
BS2V 2MXV 80-4802/C-ITT	5,5 x2	7,5 x2	10,9 x2			940									
BS2V 2MXV 80-4803/C-ITT	7,5 x2	10 x2	14,3 x2			1001							170		
BS2V 2MXV 80-4804/D-ITT	11 x2	15 x2	21,5 x2			1212									
BS2V 2MXV 80-4805/D-ITT	15 x2	20x2	27,3 x 2												
BS2V 2MXV 80-4806/D-ITT	15 x2	20x2	27,3 x 2			*									
BS2V 2MXV 80-4807/E-ITT	18,5 x2	25x2	34 x 2												
BS2V 2MXV 100-6501-ITT	5,5 x2	7,5 x2	10,9 x2	150	150	*	*	*	*	550	950	*	*	*	
BS2V 2MXV 100-6502-2R-ITT	7,5 x2	10 x2	14,3 x2												
BS2V 2MXV 100-6502-ITT	11 x2	15 x2	21,5 x2												
BS2V 2MXV 100-6503-2R-ITT	15 x2	20 x2	27,3 x 2												
BS2V 2MXV 100-6503/A-ITT	18,5 x2	25 x2	34 x 2												
BS2V 2MXV 100-6504-2R/A-ITT	18,5 x2	25 x2	34 x 2												
BS2V 2MXV 100-6504-ITT	22 x2	30 x2	41 x 2												
BS2V 2MXV 100-9001-1R-ITT	5,5 x2	7,5 x2	10,9 x2	200	200	*	*	*	*	550	950	*	*	*	
BS2V 2MXV 100-9001-ITT	7,5 x2	10 x2	14,3 x2												
BS2V 2MXV 100-9002-2R-ITT	11 x2	15 x2	21,5 x2												
BS2V 2MXV 100-9002-ITT	15 x2	20 x2	27,3 x 2												
BS2V 2MXV 100-9003-2R/A-ITT	18,5 x2	25 x2	34 x 2												
BS2V 2MXV 100-9003-ITT	22 x2	30 x2	41 x 2												

Dimensions not binding to be verified when ordering

CALPEDA ROMANIA - INFINITY PUMPS SRL
Tel: 0268.33.47.47 / 0722.244.944
vanzari@calpeda.ro | www.calpeda.ro

BS. MXV. ITT

Pressure boosting sets with 2 to 3 vertical multi-stage pumps with I-MAT frequency converter

Dimensions and weights

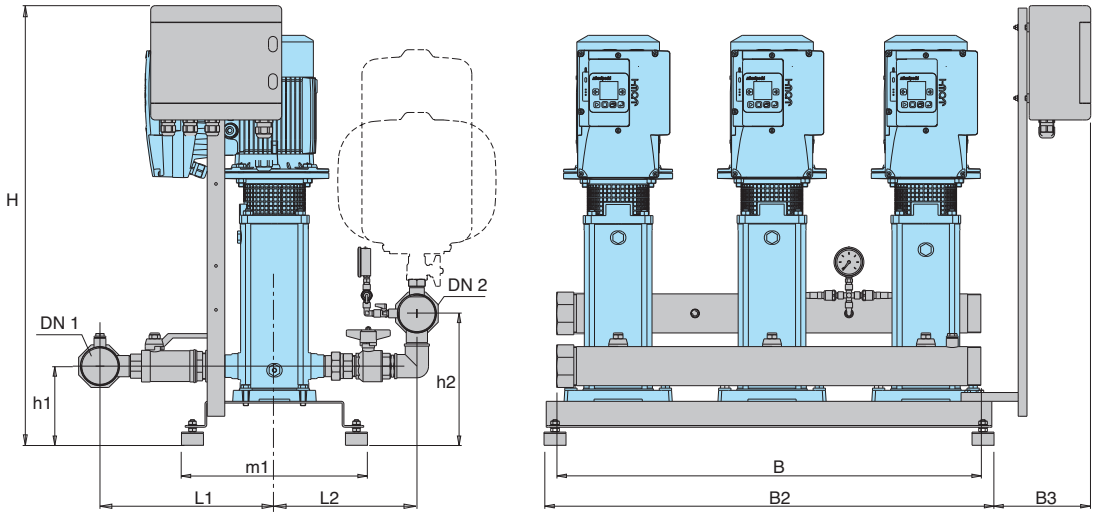

TYPE	Motor			Connection		mm									weight
	kW	HP	A	DN 1	DN 2	H	h1	h2	L1	L2	m1	B	B2	B3	kg
BS3V 3MXV 25-204/C-ITT	0,75 x3	1 x3	1,9 x3												
BS3V 3MXV 25-205/C-ITT	0,75 x3	1 x3	1,9 x3												105
BS3V 3MXV 25-206/D-ITT	1,1 x3	1,5 x3	2,7 x3												107
BS3V 3MXV 25-207/D-ITT	1,1 x3	1,5 x3	2,7 x3	G 2	G 2	914	175	257	311,5	305,5	373	950	1010	225	109
BS3V 3MXV 25-208/D-ITT	1,5 x3	2 x3	4,3 x3												111
BS3V 3MXV 25-210/D-ITT	1,5 x3	2 x3	4,3 x3												118
BS3V 3MXV 25-212/D-ITT	2,2 x3	3 x3	5,3 x3												
BS3V 3MXV 32-404/D-ITT	1,1 x3	1,5 x3	2,7 x3												
BS3V 3MXV 32-405/D-ITT	1,1 x3	1,5 x3	2,7 x3												108
BS3V 3MXV 32-406/D-ITT	1,5 x3	2 x3	4,3 x3												111
BS3V 3MXV 32-407/D-ITT	1,5 x3	2 x3	4,3 x3	G 2 1/2	G 2 1/2	914	175	275	344,5	287,5	373	950	1010	225	115
BS3V 3MXV 32-408/D-ITT	2,2 x3	3 x3	5,3 x3												118
BS3V 3MXV 32-410/D-ITT	2,2 x3	3 x3	5,3 x3												121
BS3V 3MXV 32-412/C-ITT	3 x3	4 x3	6,6 x3												
BS3V 3MXV 40-804/D-ITT	1,5 x3	2 x3	4,3 x3												
BS3V 3MXV 40-805/D-ITT	2,2 x3	3 x3	5,3 x3												116
BS3V 3MXV 40-806/D-ITT	2,2 x3	3 x3	5,3 x3												119
BS3V 3MXV 40-807/C-ITT	3 x3	4 x3	6,6 x3	G 3	G 3	914	180	300	402,5	329,5	373	950	1010	225	121
BS3V 3MXV 40-808/C-ITT	3 x3	4 x3	6,6 x3												143
BS3V 3MXV 40-810/D-ITT	4 x3	5,5 x3	9,6 x3												145
BS3V 3MXV 40-811/D-ITT	4 x3	5,5 x3	9,6 x3												

Dimensions not binding to be verified when ordering * Dimensions on request

CALPEDA ROMANIA - INFINITY PUMPS SRL
Tel: 0268.33.47.47 / 0722.244.944
vanzari@calpeda.ro | www.calpeda.ro

BS. MXV. ITT

Pressure boosting sets with 2 to 3 vertical multi-stage pumps with I-MAT frequency converter

Dimensions and weights

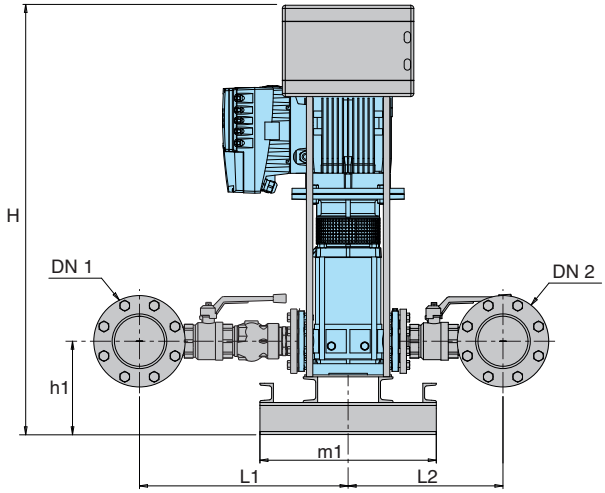

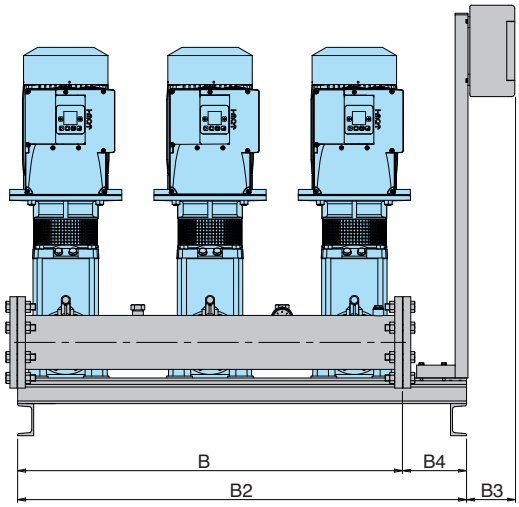

TYPE	Motor			Connection		mm									weight
	kW	HP	A	DN 1	DN 2	H	h1	L1	L2	m1	B	B2	B3	B4	kg
BS3V 3MXV 50-1603/C-ITT	3 x3	4 x3	6,6 x3	100	100	1210	276	470	370	550	1200	1400	160	200	-
BS3V 3MXV 50-1604/D-ITT	4 x3	5,5 x3	9,6 x3												
BS3V 3MXV 50-1605/C-ITT	5,5 x3	7,5 x3	10,9 x3												
BS3V 3MXV 50-1606/C-ITT	5,5 x3	7,5 x3	10,9 x3												
BS3V 3MXV 50-1607/C-ITT	7,5 x3	10 x3	14,3 x3												
BS3V 3MXV 50-1608/C-ITT	7,5 x3	10 x3	14,3 x3												
BS3V 3MXV 65-3202/D-ITT	4 x3	5,5 x3	9,6 x3	125	125	1210	291	580	462	550	1200	1400	160	200	
BS3V 3MXV 65-3203/C-ITT	5,5 x3	7,5 x3	10,9 x3												
BS3V 3MXV 65-3204/C-ITT	7,5 x3	10 x3	14,3 x3												
BS3V 3MXV 65-3205/D-ITT	11 x3	15 x3	21,5 x3												
BS3V 3MXV 65-3206/D-ITT	11 x3	15 x3	21,5 x3										170		
BS3V 3MXV 65-3207/D-ITT	15 x3	20 x3	27,3 x3												
BS3V 3MXV 80-4801/D-ITT	4 x3	5,5 x3	9,6 x3	150	150	1210	291	683	500	550	1200	1400	160	200	
BS3V 3MXV 80-4802/C-ITT	5,5 x3	7,5 x3	10,9 x3												
BS3V 3MXV 80-4803/C-ITT	7,5 x3	10 x3	14,3 x3												
BS3V 3MXV 80-4804/D-ITT	11 x3	15 x3	21,5 x3												
BS3V 3MXV 80-4805/D-ITT	15 x3	20x3	27,3 x3												
BS3V 3MXV 80-4806/D-ITT	15 x3	20x3	27,3 x3										170		
BS3V 3MXV 80-4807/E-ITT	18,5 x3	25x3	34 x3												
BS3V 3MXV 100-6501-ITT	5,5 x3	7,5 x3	10,9 x3	200	200	*	*	*	*	550	1500	*	*	*	
BS3V 3MXV 100-6502-2R-ITT	7,5 x3	10 x3	14,3 x3												
BS3V 3MXV 100-6502-ITT	11 x3	15 x3	21,5 x3												
BS3V 3MXV 100-6503-2R-ITT	15 x3	20 x3	27,3 x3												
BS3V 3MXV 100-6503/A-ITT	18,5 x3	25 x3	34 x3												
BS3V 3MXV 100-6504-2R/A-ITT	18,5 x3	25 x3	34 x3												
BS3V 3MXV 100-6504-ITT	22 x3	30 x3	41 x3												
BS3V 3MXV 100-9001-1R-ITT	5,5 x3	7,5 x3	10,9 x3	250	250	*	*	*	*	550	1500	*	*	*	
BS3V 3MXV 100-9001-ITT	7,5 x3	10 x3	14,3 x3												
BS3V 3MXV 100-9002-2R-ITT	11 x3	15 x3	21,5 x3												
BS3V 3MXV 100-9002-ITT	15 x3	20 x3	27,3 x3												
BS3V 3MXV 100-9003-2R/A-ITT	18,5 x3	25 x3	34 x3												
BS3V 3MXV 100-9003-ITT	22 x3	30 x3	41 x3												

Dimensions not binding to be verified when ordering * Dimensions on request

CALPEDA ROMANIA - INFINITY PUMPS SRL
Tel: 0268.33.47.47 / 0722.244.944
vanzari@calpeda.ro | www.calpeda.ro

BS. 2NG...

Systems with two self-priming Jet pumps
Fixed speed pump

Coverage chart

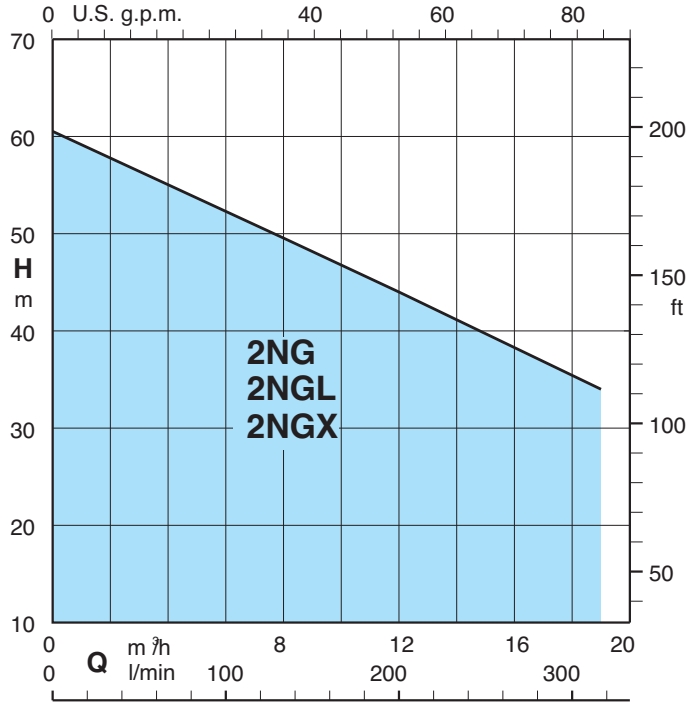

Construction
Automatic pressure boosting plant consisting of two pumps complete with ball, non return valve on the suction side and ball valves on the discharge side.
Suction and delivery manifolds are in AISI 304 stainless steel.
Connections are located on the delivery manifold for the installation of two 20/24 litres vessels.

Electrical control boards:
- with microprocessor for fixed speed pump units.

The unit includes one pressure gauge and two adjustable differential pressure switches.

Operation
BS 2F **Fixed speed pump**
Depending on the reduction of the pressure in the system, the pressure switches determine the starting up of the pumps in sequence and the microprocessor alternates the starts.

Applications
For drawing water out a well.
As pressure boosting pump to increase water pressure when needed (follow local rules).

Motors
2-pole induction motors, 50 Hz, n ≈ 2900 rpm.
- Three-phase 230/400V ± 10%, suitable for operation with frequency converter;
- Single-phase 230 V ± 10%, with thermal protector.

Insulation class F.
Protection IP 54.
Constructed in accordance with: IEC 60034.
Other voltages and frequencies on request.

Vessels (on request)
Capacity 20/24 litres, membrane type, air precharged.

CALPEDA ROMANIA - INFINITY PUMPS SRL
Tel: 0268.33.47.47 / 0722.244.944
vanzari@calpeda.ro | www.calpeda.ro

BS. 2NGL, 2NG

Systems with two self-priming Jet pumps
Fixed speed pump

Coverage chart

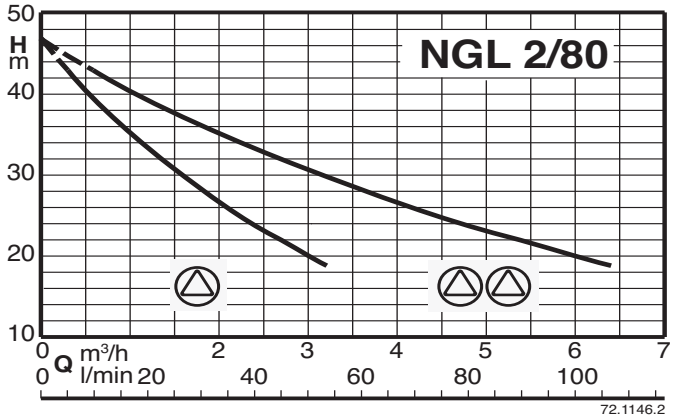

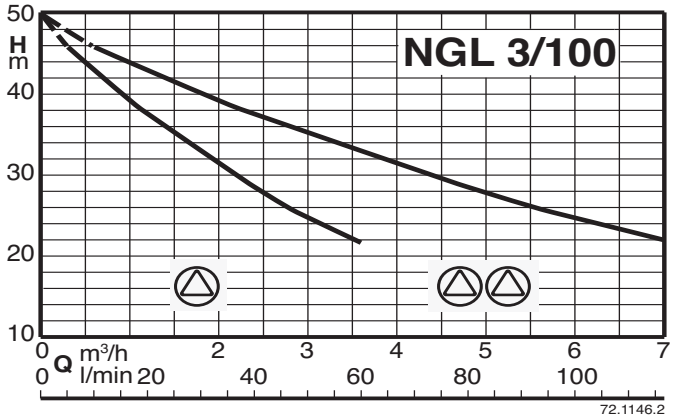

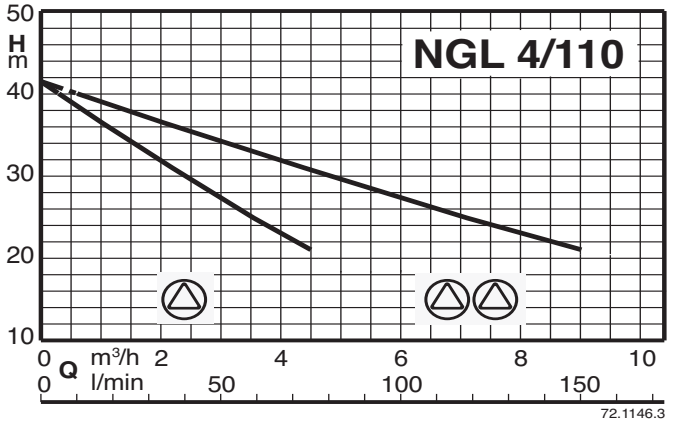

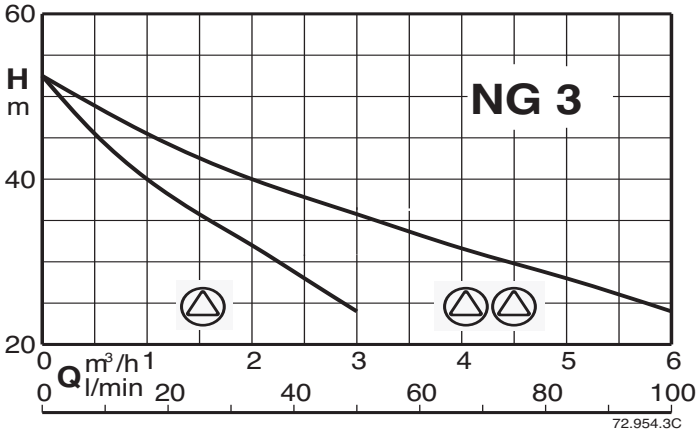

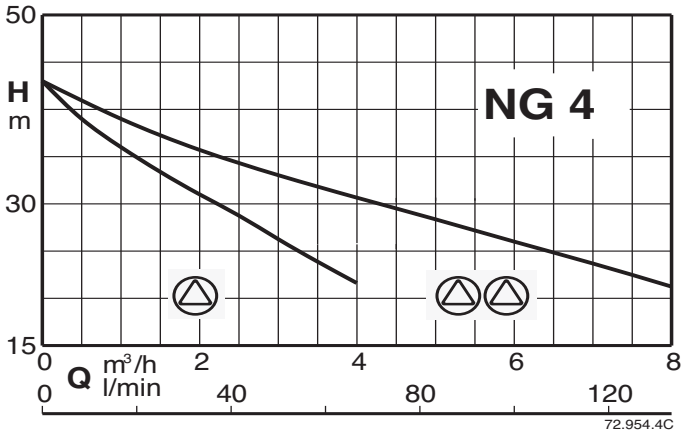

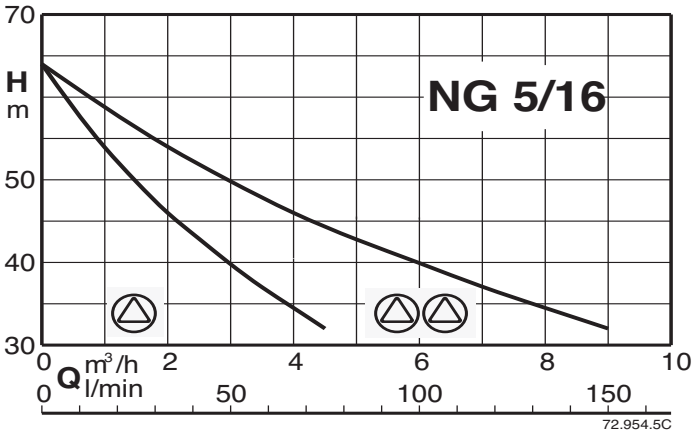

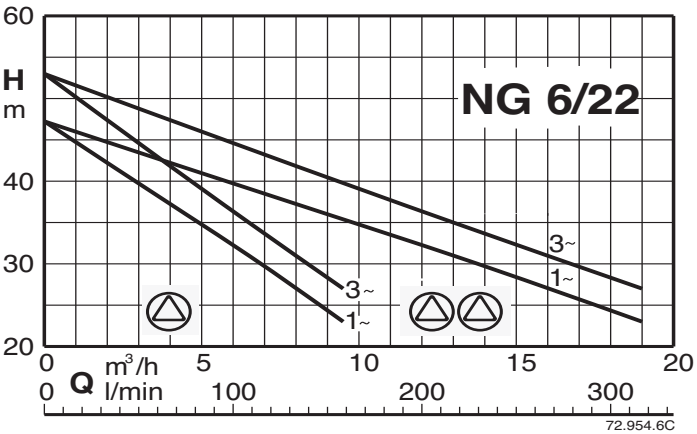

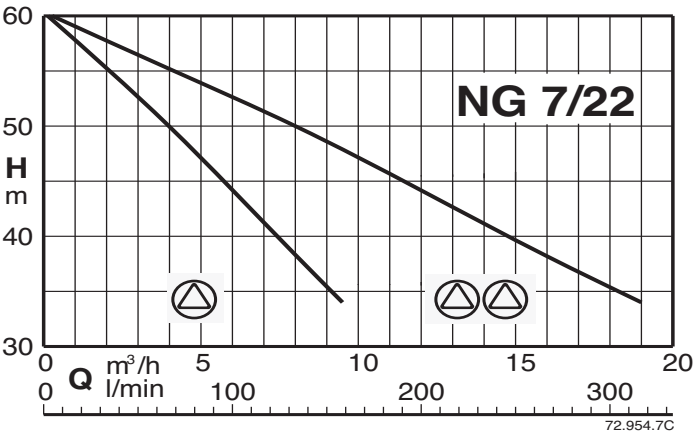

CALPEDA ROMANIA - INFINITY PUMPS SRL
Tel: 0268.33.47.47 / 0722.244.944
vanzari@calpeda.ro | www.calpeda.ro

BS. 2NGX

Systems with two self-priming Jet pumps
Fixed speed pump

Coverage chart

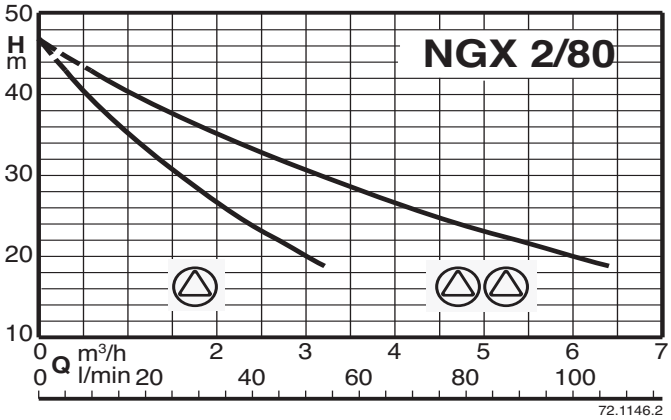

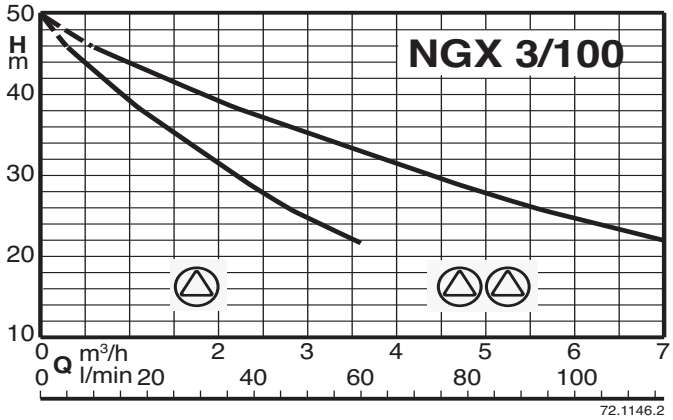

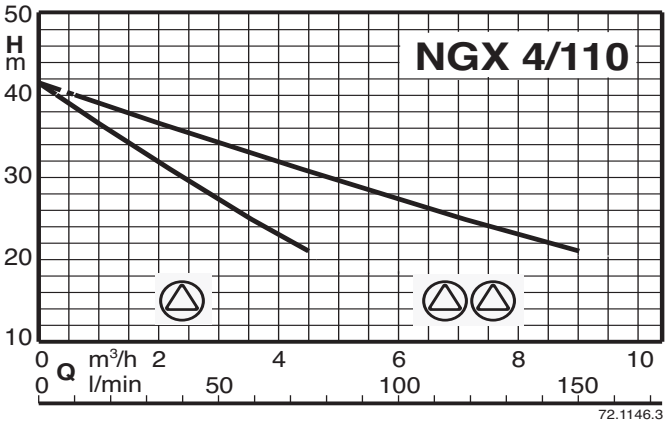

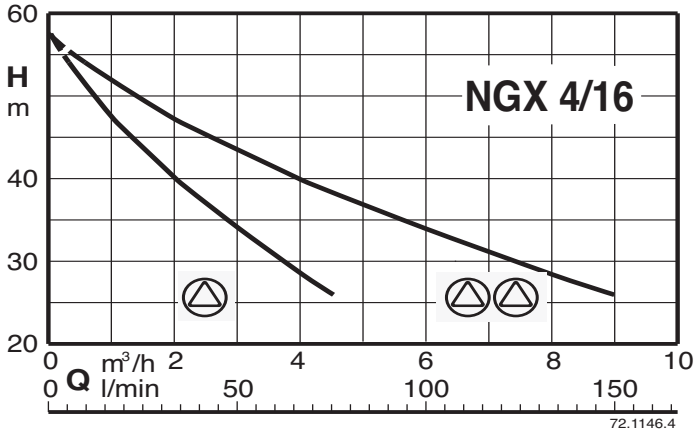

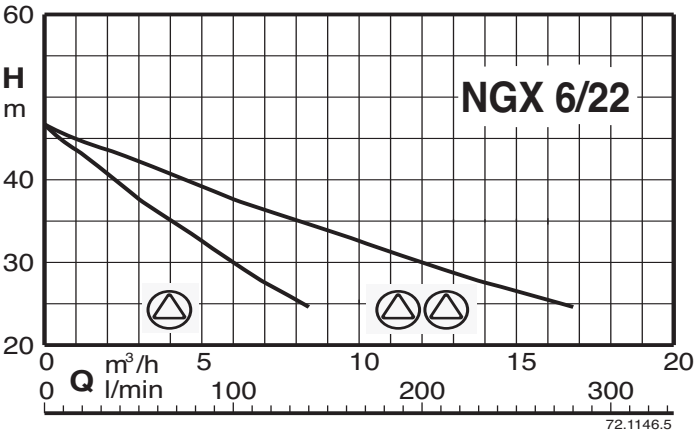

CALPEDA ROMANIA - INFINITY PUMPS SRL
Tel: 0268.33.47.47 / 0722.244.944
vanzari@calpeda.ro | www.calpeda.ro

BS. 2NG...

Systems with two self-priming Jet pumps
Fixed speed pump

calpeda®

Characteristic, dimensions and weights

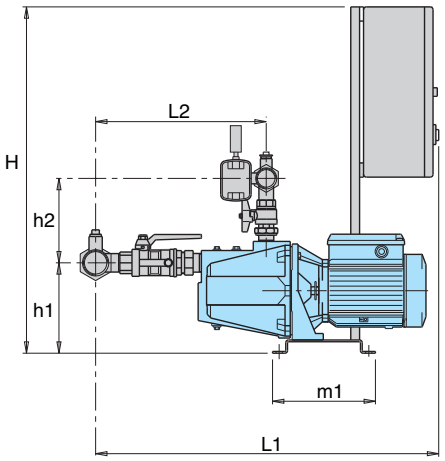

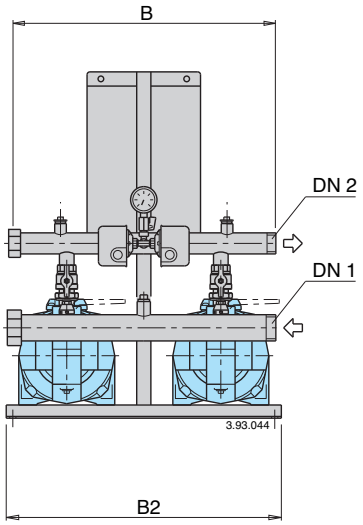

BS2F BSM2F

Mains: 400V 3~ Motor: 400V 3~	Mains: 230V 1~ Motor: 230V 1~	Motor		Q max*	Pres. switch setting		Connection		mm								Weight	Vessel	
		kW	HP	l/min	bar	bar	DN1	DN2	H	h1	h2	L1	L2	m1	B2	B	kg	Mem. litre	Vessel litre
BS2F 2NGL 2/80	**BSM2F 2NGLM 2/80**	0,55+0,55	0,75+0,75	100	2,4÷3,6	2,0÷3,2	G 2	G 1 1/2	840	151	206	793	355	235	625	600	42	24x2	100
BS2F 2NGL 3/100	**BSM2F 2NGLM 3/100**	0,65+0,65	0,9+0,9	110	2,8÷4,0	2,4÷3,6	G 2	G 1 1/2	840	151	206	793	355				46	24x2	100
BS2F 2NGL 4/110	**BSM2F 2NGLM 4/110**	0,75+0,75	1+1	150	2,4÷3,6	2,0÷3,2	G 2	G 1 1/2	840	151	206	793	355				49	24x2	100

* Maximum pumps flow at minimum set pressure of 2 nd pressure switch.

Dimensions not binding to be verified when ordering

BS2F BSM2F

Mains: 400V 3~ Motor: 400V 3~	Mains: 230V 1~ Motor: 230V 1~	Motor		Q max*	Pres. switch setting		Connection		mm								Weight	Vessel	
		kW	HP	l/min	bar	bar	DN1	DN2	H	h1	h2	L1	L2	m1	B2	B	kg	Mem. litre	Vessel litre
BS2F 2NG 3/A	**BSM2F 2NGM 3/A**	0,55+0,55	0,75+0,75	95	3,0÷4,2	2,5÷3,7	G2	G 1 1/2	840	184	188	775	345	235	625	600	61	24x2	100
BS2F 2NG 4/B	**BSM2F 2NGM 4/A**	0,75+0,75	1+1	130	2,4÷3,6	2,0÷3,2	G2	G 1 1/2	840	184	188	775	345				62	24x2	100
BS2F 2NG 5/16/A	**BSM2F 2NGM 5/16E**	1,1+1,1	1,5+1,5	140	3,8÷5,3	3,4÷4,9	G 2 1/2	G 1 1/2	840	200	202	935	470				86	24x2	100
	BSM2F 2NGM 6/22E	1,5+1,5	2+2	290	3,0÷4,2	2,5÷3,7	G 2 1/2	G 1 1/2	840	200	202	935	470				89	100	200
BS2F 2NG 6/22/A		1,5+1,5	2+2	290	3,2÷4,5	2,8÷4,0	G 2 1/2	G 1 1/2	840	200	202	935	470				90	100	200
BS2F 2NG 7/22/B		2,2+2,2	3+3	300	3,8÷5,3	3,4÷4,9	G 2 1/2	G 1 1/2	840	200	202	935	470				92	200	300

* Maximum pumps flow at minimum set pressure of 2 nd pressure switch.

Dimensions not binding to be verified when ordering

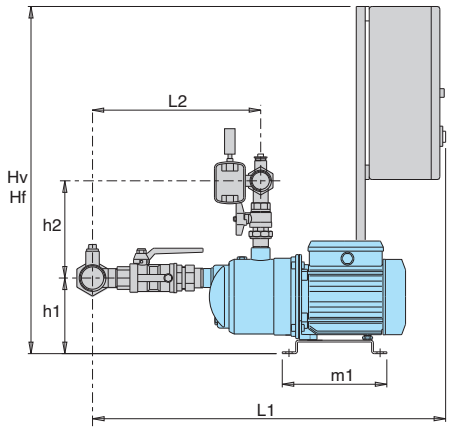

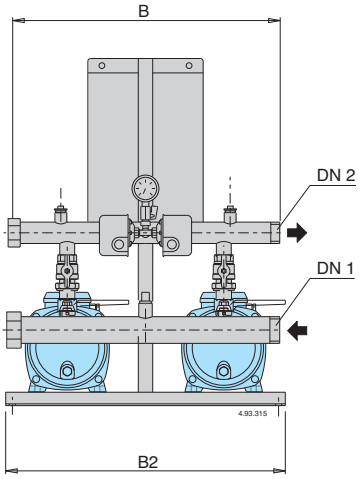

BS2F BSM2F

Mains: 400V 3~ Motor: 400V 3~	Mains: 230V 1~ Motor: 230V 1~	Motor		Q max*	Pres. switch setting		Connection		mm								Weight	Vessel	
		kW	HP	l/min	bar	bar	DN1	DN2	H	h1	h2	L1	L2	m1	B2	B	kg	Mem. litre	Vessel litre
BS2F 2NGX 2/80	**BSM2F 2NGXM 2/80**	0,55+0,55	0,75+0,75	100	2,4÷3,6	2,0÷3,2	G 2	G 1 1/2	840	151	206	793	355	235	625	600	42	24x2	100
BS2F 2NGX 3/100	**BSM2F 2NGXM 3/100**	0,65+0,65	0,9+0,9	110	2,8÷4,0	2,4÷3,6	G 2	G 1 1/2	840	151	206	793	355				46	24x2	100
BS2F 2NGX 4/110	**BSM2F 2NGXM 4/110**	0,75+0,75	1+1	150	2,4÷3,6	2,0÷3,2	G 2	G 1 1/2	840	151	206	793	355				49	24x2	100
BS2F 2NGX 4/16	**BSM2F 2NGXM 4/16**	1,1+1,1	1,5+1,5	130	3,4÷4,9	3,0÷4,5	G 2	G 1 1/2	840	187	212	836	380				61	24x2	100
BS2F 2NGX 6/22/A	**BSM2F 2NGXM 6/22**	1,5+1,5	2+2	280	3,0÷4,2	2,5÷3,7	G 2	G 1 1/2	840	187	212	836	380				65	100	200

* Maximum pumps flow at minimum set pressure of 2 nd pressure switch.

Dimensions not binding to be verified when ordering

CALPEDA ROMANIA - INFINITY PUMPS SRL
Tel: 0268.33.47.47 / 0722.244.944
vanzari@calpeda.ro | www.calpeda.ro

BS. 4SDF. EMT

Pressure boosting sets with one submersible borehole pump with EASYMAT frequency converter

Coverage chart

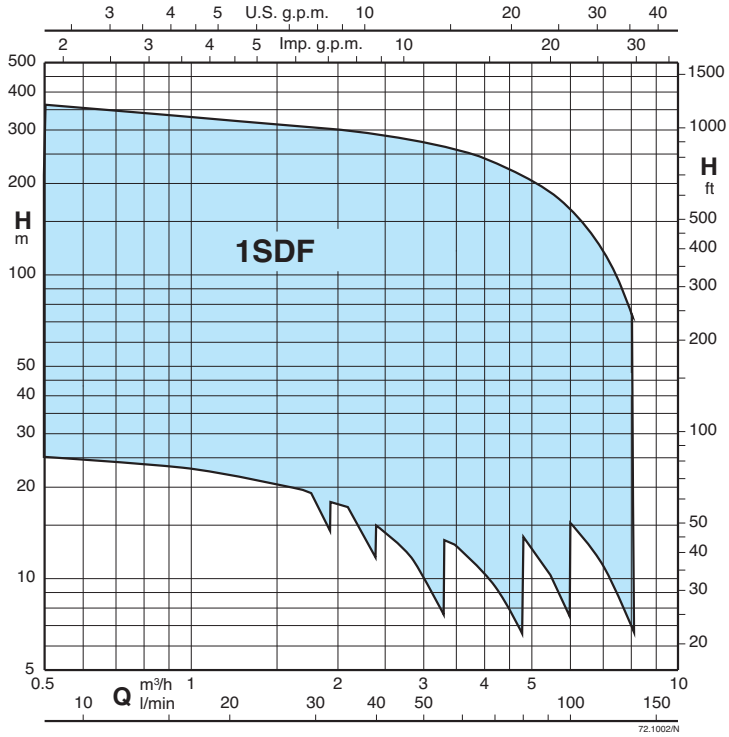

Operation

BS1V **Pressure boosting sets with 1 variable speed pump (with EASYMAT).**
Depending on water consumption, one pump is activated, at variable speed, in order to guarantee the quantity of water required at the set pressure.

CONSTANT PRESSURE MODE:
the system keeps the pressure constant when the quantity of water requested by the user changes.

FIXED SPEED MODE:
the system works at a fixed speed that user can choose according to his need.

Execution

Constant pressure boosting sets with **EASYMAT** frequency converter made of 1 pump, ball valve, non return valve and pressure gauge on delivery side.
Suitable for installation of pressure vessel on delivery side.

Applications

For drawing water out of a well
As pressure boosting pump for central water systems with low pressure (follow local specifications if increasing network pressure)

Motors

2-pole induction motors, 50Hz, n ≈ 2900 rpm, suitable for operation with frequency converter
- Three-phase 230V +/-10%
Class F insulation
IP 68 protection
Execution according IEC 60034
Other voltages on demand

Pressure vessels (on demand)

CALPEDA ROMANIA - INFINITY PUMPS SRL
Tel: 0268.33.47.47 / 0722.244.944
vanzari@calpeda.ro | www.calpeda.ro

BS. 4SDF. EMT

Pressure boosting sets with one submersible borehole pump with EASYMAT frequency converter

Coverage chart

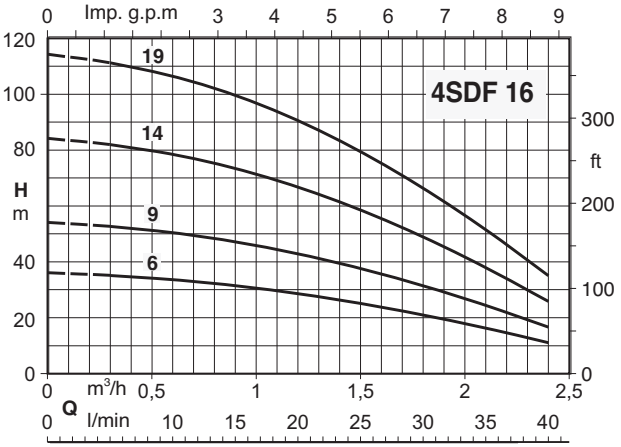

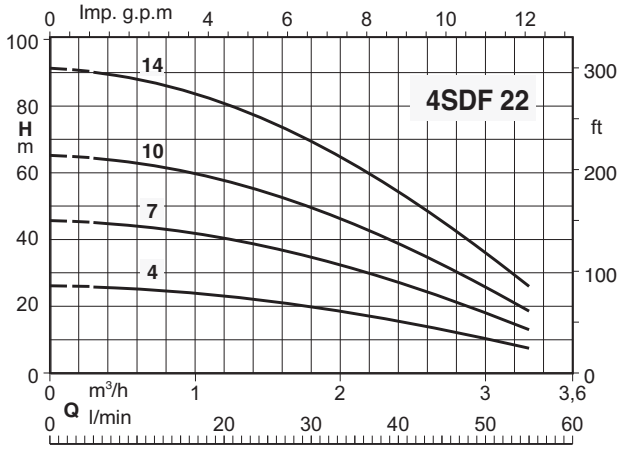

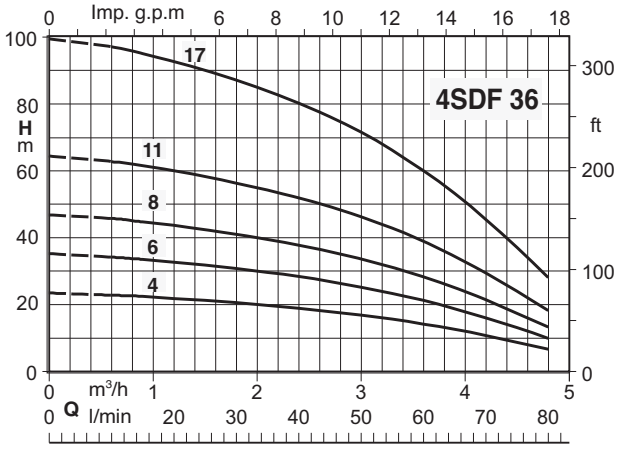

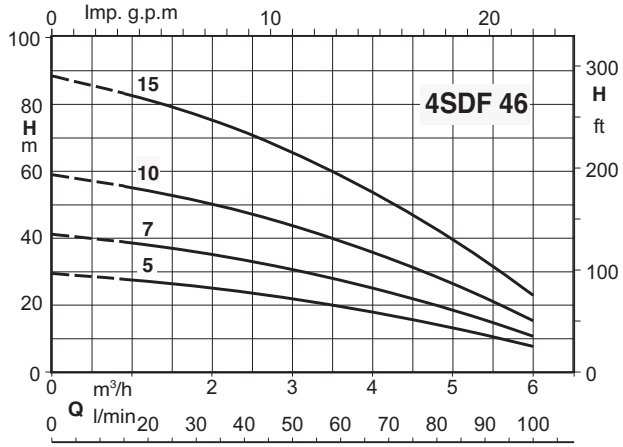

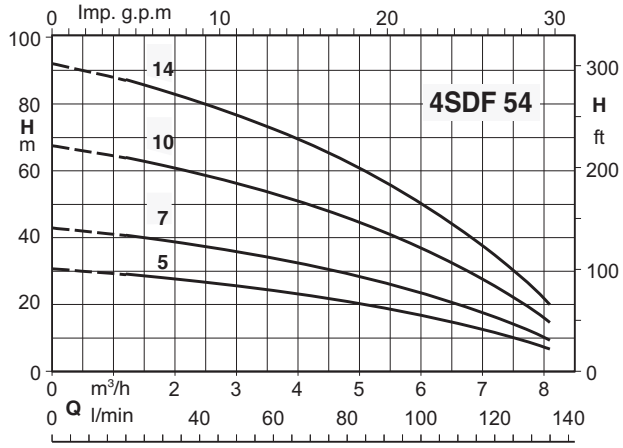

Characteristic and dimensions

Mains: 1~ 230V Motor: 3~ 230V	mains A	motor A	P2 kW	P2 HP
BSM1V 1-4SDF 16/6E-EMT	2.5	1.9	0.37	0.5
BSM1V 1-4SDF 16/9E-EMT	2.5	1.9	0.37	0.5
BSM1V 1-4SDF 16/14E-EMT	3.7	2.8	0.55	0.75
BSM1V 1-4SDF 16/19E-EMT	4.8	3.5	0.75	1
BSM1V 1-4SDF 22/4E-EMT	2.5	1.9	0.37	0.5
BSM1V 1-4SDF 22/7E-EMT	2.5	1.9	0.37	0.5
BSM1V 1-4SDF 22/10E-EMT	3.7	2.8	0.55	0.75
BSM1V 1-4SDF 22/14E-EMT	4.8	3.5	0.75	1
BSM1V 1-4SDF 36/4E-EMT	2.5	1.9	0.37	0.5
BSM1V 1-4SDF 36/6E-EMT	2.5	1.9	0.37	0.5
BSM1V 1-4SDF 36/8E-EMT	3.7	2.8	0.55	0.75
BSM1V 1-4SDF 36/11E-EMT	4.8	3.5	0.75	1
BSM1V 1-4SDF 36/17E-EMT	6.8	4.9	1.1	1.5
BSM1V 1-4SDF 46/5E-EMT	2.5	1.9	0.37	0.5
BSM1V 1-4SDF 46/7E-EMT	3.7	2.8	0.55	0.75
BSM1V 1-4SDF 46/10E-EMT	4.8	3.5	0.75	1
BSM1V 1-4SDF 46/15E-EMT	6.8	4.9	1.1	1.5
BSM1V 1-4SDF 54/5E-EMT	3.7	2.8	0.55	0.75
BSM1V 1-4SDF 54/7E-EMT	4.8	3.5	0.75	1
BSM1V 1-4SDF 54/10E-EMT	6.8	4.9	1.1	1.5
BSM1V 1-4SDF 54/14E-EMT	9.5	6.8	1.5	2

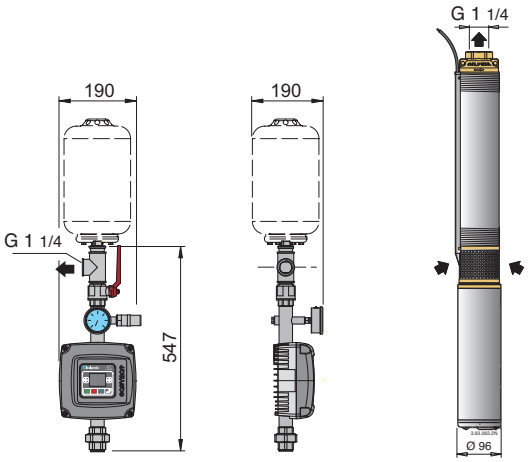

CALPEDA ROMANIA - INFINITY PUMPS SRL
Tel: 0268.33.47.47 / 0722.244.944
vanzari@calpeda.ro | www.calpeda.ro

EJ, DJ, EDJ

UNI-EN 12845 fire-fighting systems

CALPEDA ROMANIA - INFINITY PUMPS SRL
Tel: 0268.33.47.47 / 0722.244.944
vanzari@calpeda.ro | www.calpeda.ro

EJ, DJ, EDJ

UNI-EN 12845 fire-fighting systems

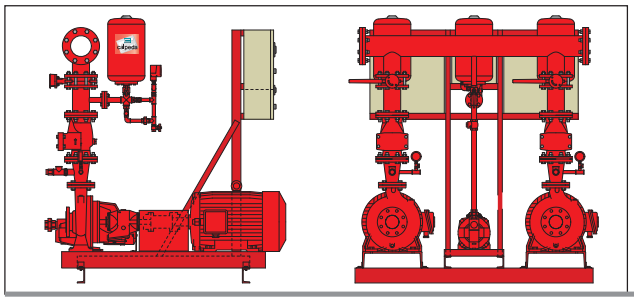

EJ 11
UNI-EN 12845 units with 1 **N** series electric main pump

EJ 21
UNI-EN 12845 units with 2 **N series** electric main pumps

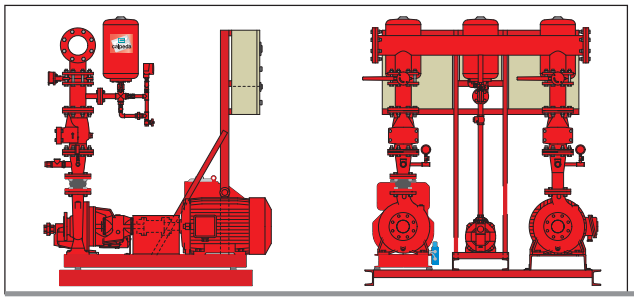

DJ 11
UNI-EN 12845 units with 1 **N** series main pump (diesel motor)

EDJ 21
UNI-EN 12845 units with 2 **N** series main pumps
(electric and diesel motors)

Construction

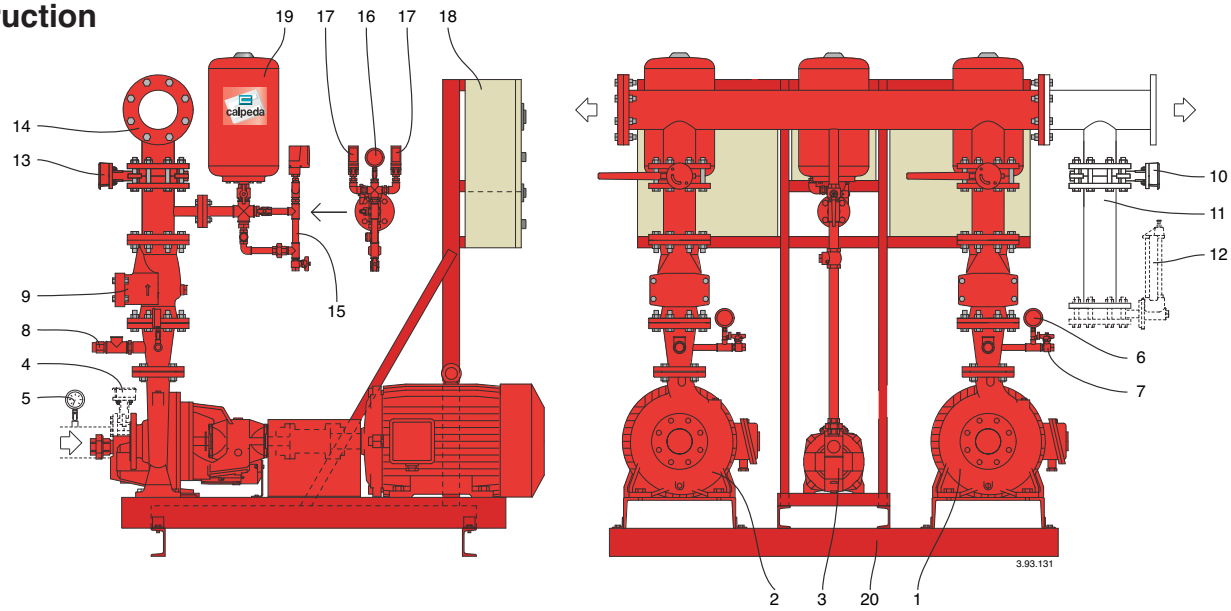

1) Main pump
2) Main pump
3) Jockey pump
4) Butterfly valve in suction section (on request only for installation with positive head)
5) Vacuometer
6) Pressure gauge in delivery section
7) Ball valve for draining
8) Adjusted diaphragm
9) Non-return valve (accessible)
10) Butterfly valve for capacity-check system (on request)
11) Manifold for flow meter (on request)
12) Flow meter (on request)
13) Butterfly valve or ball valve in delivery section
14) Delivery manifold
15) Test circuit (manual) (one for each pump)
16) Pressure gauge
17) Starting pressure switches of main pumps
Starting pressure switch to stop jockey pump
18) Electric boxes (one for each pump)
19) Diaphragm tanks
20) Steel base for all pumps

All the butterfly valves or ball valve are locked in the normal position by means of a lock and key.
On request: anti-vibration couplings in both the suction and delivery sections.

CALPEDA ROMANIA - INFINITY PUMPS SRL
Tel: 0268.33.47.47 / 0722.244.944
vanzari@calpeda.ro | www.calpeda.ro

EJ, DJ, EDJ

UNI-EN 12845 fire-fighting systems

Construction

Units constructed in accordance with UNI-EN 12845 standards for automatic fire-fighting systems (with sprinkler) and according to UNI 10779 for fire-fighting systems with fire hydrants.
The units may be composed of 1 or 2 main pumps.
Units are fitted with a jockey pump, with which the system pressure level can be maintained without having to start the main pumps.

Application

For feeding water to automatic fire-fighting systems and units with hydrants.

Operation

The pumps start operating after a fall in the pressure level in the fire-extinguishing system.
The first pump to be triggered is the jockey pump.
If this pump cannot restore the pressure level, the main pump starts.
When there is more than one main pump, the pumps start in cascade sequence, with the starting pressure switches set at different pressure levels.
The pressure switches of the main pumps are used only for starting, as the pumps must be stopped manually for UNI-EN 12845 units or automatically with a timer for UNI 10779 sets.
The recirculation diaphragm allows for operation of the main pumps also when the delivery port is closed (with no consumption of water in the system), avoiding overheating of the water inside the pump body.

Weekly test
The programmable clock in the electric box controls the forced starting of the main pump (electric driven pump only).
The diaphragm avoids overheating of the water in the pump body.

Pumps

Main pumps
The main pumps can be :
N series: single stage horizontal centrifugal pumps
The N series centrifugal pumps are coupled with the electric or diesel motor through a bearing coupling. This solution allows to operate on the hydraulic part without moving the motor.

Jockey pump
Jockey pump can be a self-priming jet pump, a centrifugal pump with two impellers, a vertical multistage pump or a submersible borehole pump.
The maximum pressure developed by the jockey pump is always greater than the pressure of the main pumps.

Motors
Two-pole induction type, 50 Hz, n = 2,900 rpm
Three-phase 230/400V ± 10% up to 3 kW
400/690V ± 10% 4 kW and higher.
Insulation class F
Protection IP 54 for close coupled pumps, IP 55 for pumps with coupling.
Construction in accordance with: IEC 60034
Other voltage and frequency ratings available on request

Diesel motors (for standardised N-series pumps)
These are direct-injection pumps fitted with electric control box, fuel tank, starter batteries and silencer.

Hydraulic components

Each main pump is fitted with:
- Pressure and vacuum gauge in the suction section.
- Butterfly valve in the suction section (on request only for installation with positive suction head).
- Pressure gauge in the delivery section.
- Adjusted diaphragm.
- Pressure switch to indicate the pump is operating.
- Non-return valve of the accessible swing-type.
- Butterfly valve in the delivery section.
- Manual test circuit with pressure switches, pressure gauge, non-return valve and ball valve and cylindrical 20-liter (15 bar) tank (one for each pump).

The jockey pump is fitted with:
- Ball valve in the suction section (on request only if the pump has a positive suction head).
- Non-return valve and ball valve in the delivery section.
- Manual test circuit with pressure switch, pressure gauge, non-return valve and ball valve and cylindrical 20-liter (15 bar) tank (one for each pump).

Other components:
- Delivery manifold.
- Coupling for connection of a priming tank (only for the pumps installed with positive suction head).
- The suction manifold is never supplied as such execution is forbidden by the standards.

On request:
- Manifold for flow meter.
- Adjusted-flange, diaphragm type, flow meter.

Electric boxes

Electric main-pump box (electric motor)
Each main pump has its own electric control board housed in a metal cabinet with IP54 protection. The box contains the devices required for operation and control of the pump.
Motor starting is direct for power ratings up to 7.5 kW.
For motors with a rating equal to or higher than 11 kW pump starting is of the Y/Δ type with fuses, contactors and timer.
- programmable clock for the weekly test.
- Timer for pumps stop after 20 minutes (UNI 10779)

The following devices are located on the internal door panel:
- Line-sectioning handle - Voltmeter and ammeter with switch
- "Manual-0-Automatic" selector with extractible key only in "automatic" position - Start/Stop pushbuttons - Pilot lights to indicate: no-volt, pump running, voltage on.

Electric main-pump box (diesel motor)
This cabinet contains the electronic control devices for the control of the diesel motor and the battery chargers for feeding the starter accumulators.
The following devices are located on the front of the box:
- Line-sectioning handle.
- Front panel of the electronic unit.
- Manual-0-Automatic selector with extractible key only an "automatic" position.

Electric jockey-pump box
When installed, the jockey pump is fitted with its own electric panel, metal housing with IP 54 protection.
Control box (on request).
To be installed in a place to be looked after, to signal any possible failure of the unit state. It must be connected to V.220 and it gives an acoustic and visual signal for 24 hours.

Designation of units

.... 21 - 40/200A
- 40/200A — Type of main pump
- 21 — jockey pump
- .... — Number of main pumps
- **EJ** UNI-EN 12845 unit with electric pump N
- **DJ** UNI-EN 12845 unit with N series diesel pump
- **EDJ** UNI-EN 12845 unit with N series electric and diesel pump

CALPEDA ROMANIA - INFINITY PUMPS SRL
Tel: 0268.33.47.47 / 0722.244.944
vanzari@calpeda.ro | www.calpeda.ro

With 1 electric pump

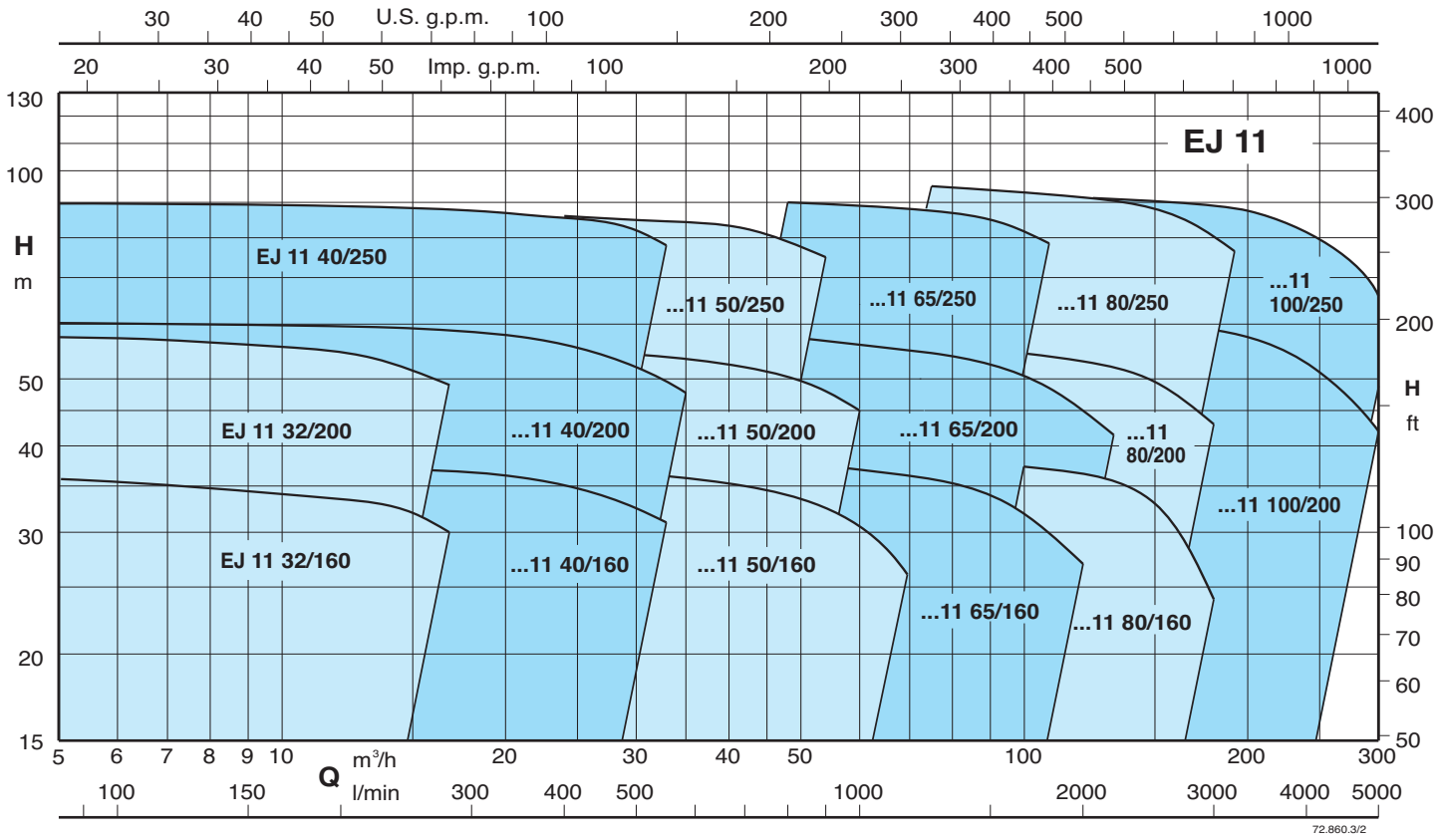

With 2 electric pumps

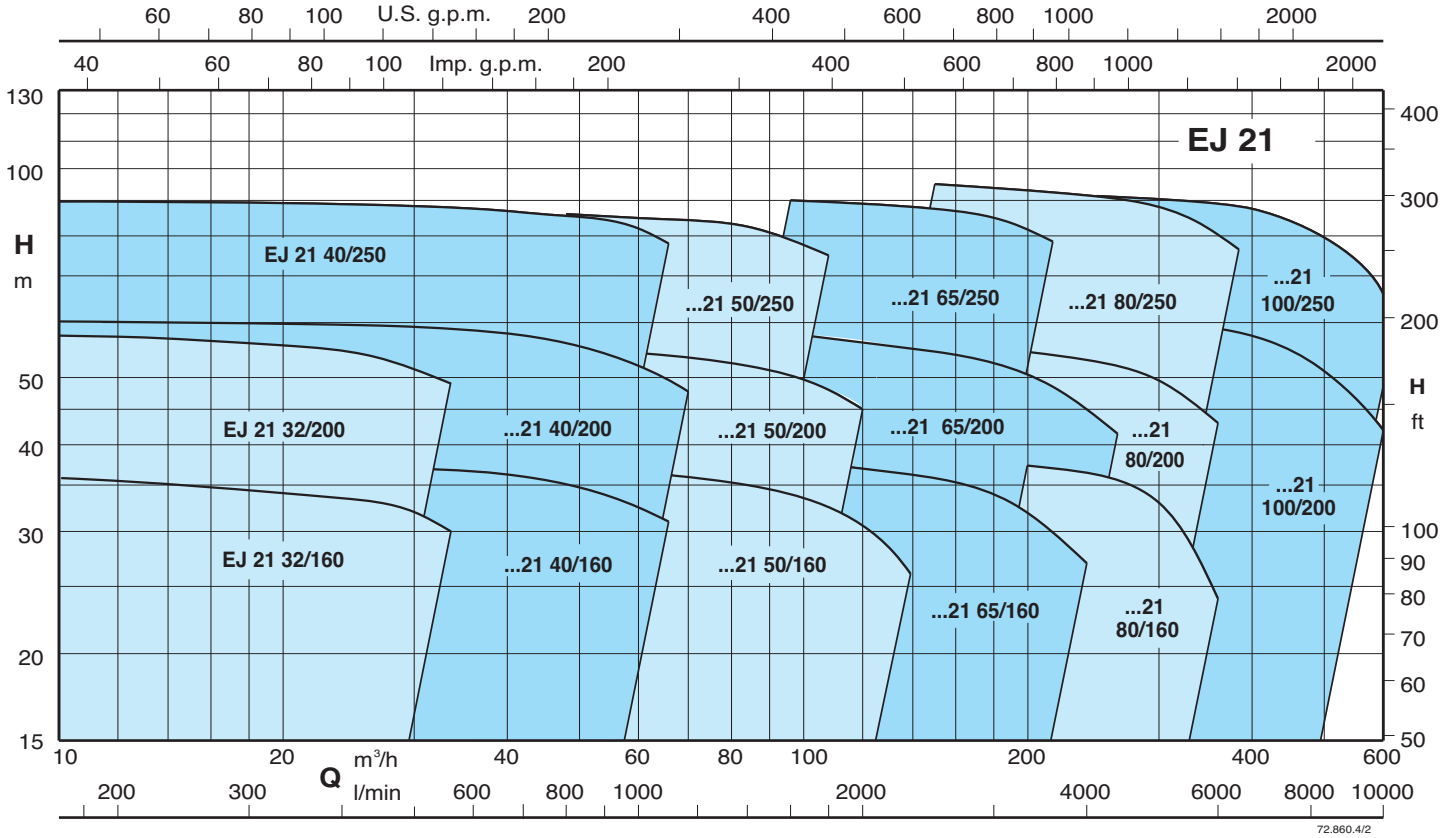

CALPEDA ROMANIA - INFINITY PUMPS SRL
Tel: 0268.33.47.47 / 0722.244.944
vanzari@calpeda.ro | www.calpeda.ro

DJ, EDJ

UNI-EN 12845 fire-fighting systems

With 1 pump (diesel motor)

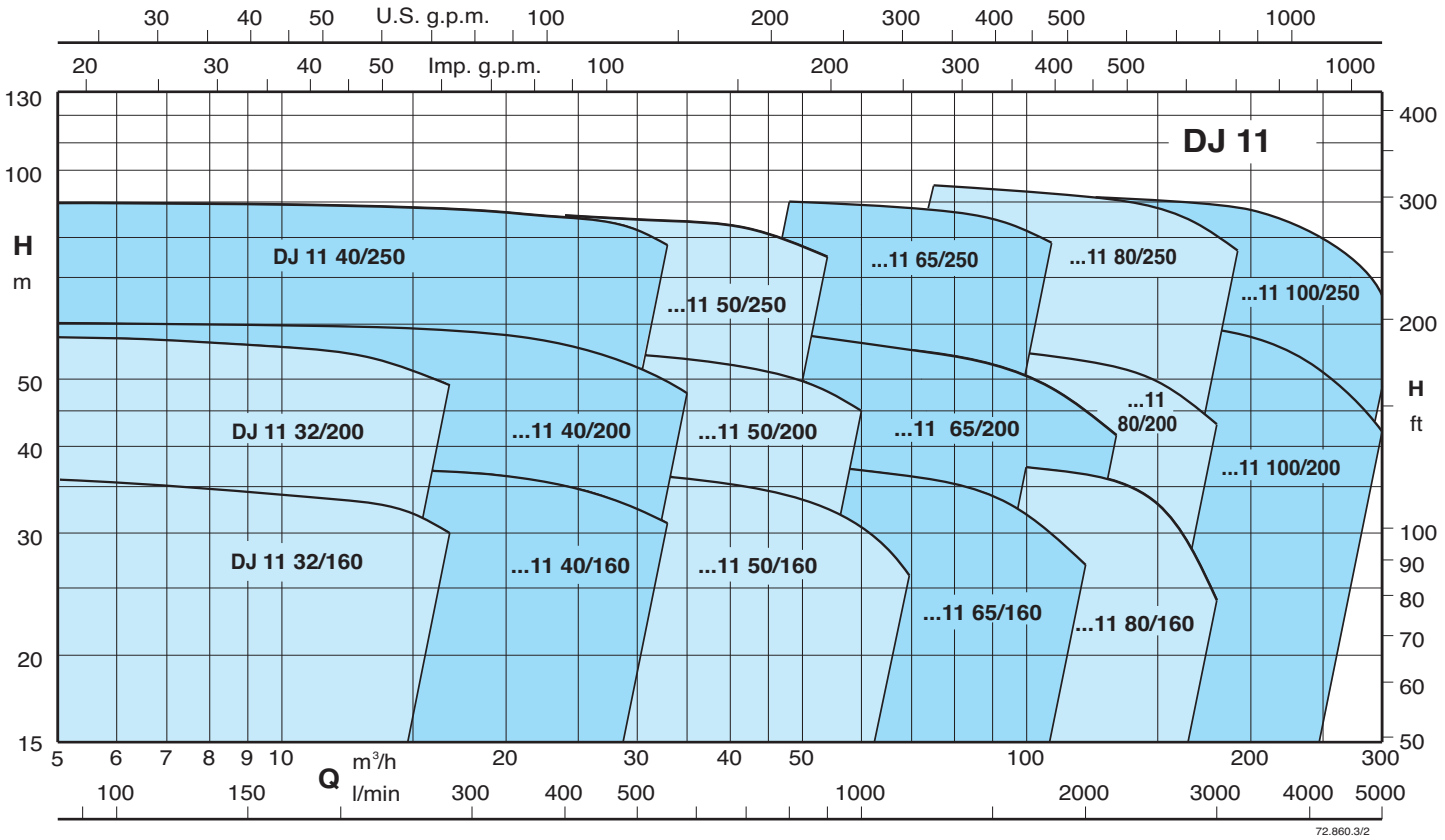

With 2 pumps (electric and diesel motors)

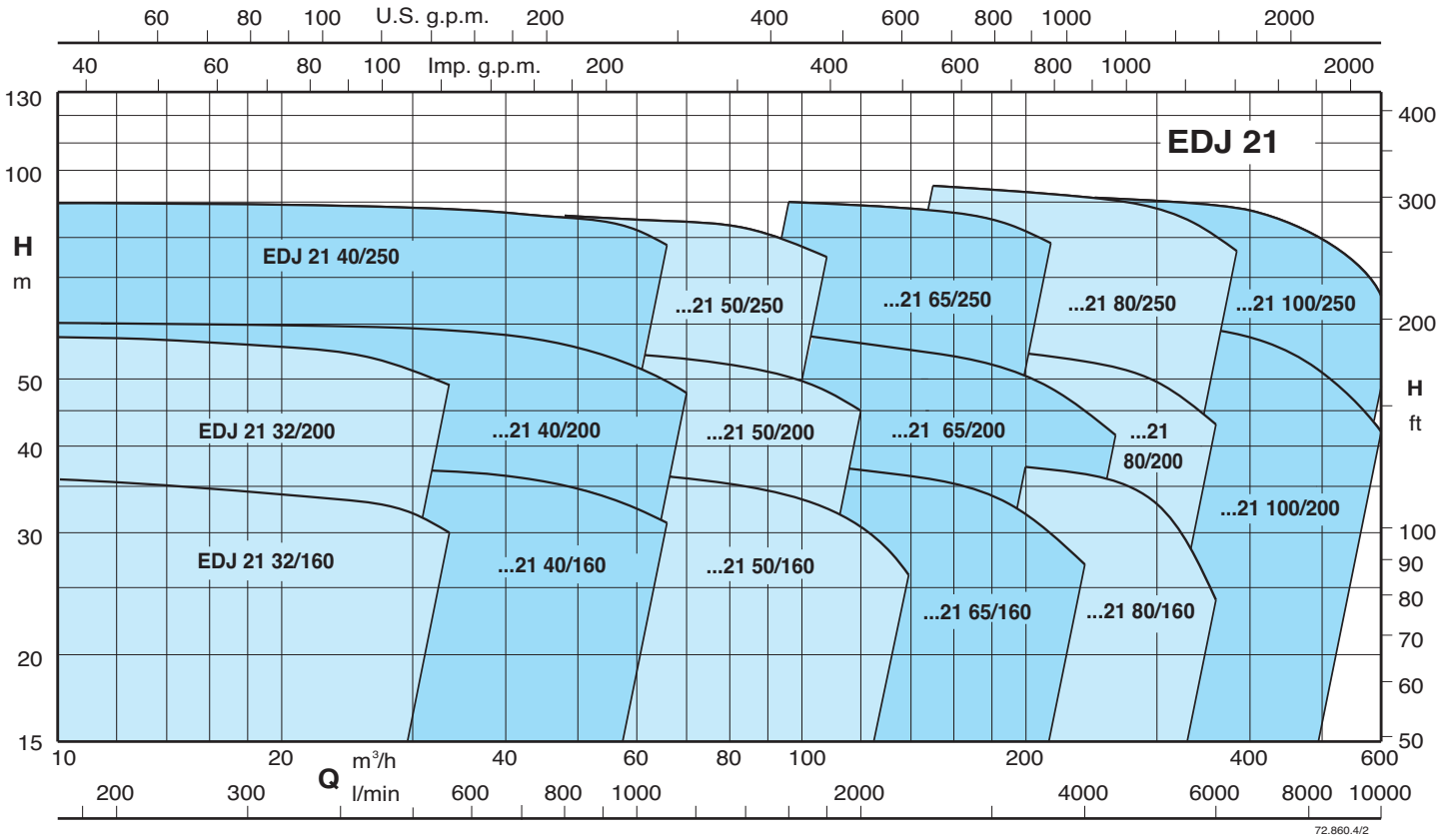

CALPEDA ROMANIA - INFINITY PUMPS SRL
Tel: 0268.33.47.47 / 0722.244.944
vanzari@calpeda.ro | www.calpeda.ro

Characteristics of full-jet nozzles

Capacity

Pressure	Nozzle diameter **mm**			
	10	12	16	20
bar	Flow-rate **l/min**			
3	115	165	295	460
4	130	190	340	530
5	150	215	380	590
6	160	235	415	650
7	175	250	450	700
8	185	270	480	750

Water-jet range

Pressure	Nozzle diameter **mm**			
	10	12	16	20
bar	Range **m**			
3	10 a 20	11 a 22	15 a 30	16 a 33
5	11 a 23	11 a 25	17 a 33	18 a 36
8	12 a 26	12 a 30	19 a 36	20 a 40

Characteristics of sprinkler nozzles

Capacity

Pressure	Rated diameter of orifice **mm**		
	10	15	20
bar	Flow-rate **l/min**		
2	80	113	162
3	98	139	199
4	114	160	230
5	127	180	258
6	139	196	282
7	150	214	305
8	161	226	325
9	171	240	345

CALPEDA ROMANIA - INFINITY PUMPS SRL
Tel: 0268.33.47.47 / 0722.244.944
vanzari@calpeda.ro | www.calpeda.ro

QM, QT

Control panels

CALPEDA ROMANIA - INFINITY PUMPS SRL
Tel: 0268.33.47.47 / 0722.244.944
vanzari@calpeda.ro | www.calpeda.ro

Index

TYPE	Supply		No. pumps				Application		
	1 ~	3 ~	1	2	3	4	Bore-hole	Submersible	Surface
QM	✓		✓				✓	✓	
M COMP	✓		✓				✓	✓	
PFC-M	✓		✓				✓		
QML/A 1 D	✓		✓					✓	✓
T COMP		✓	✓				✓		
PFC-T		✓	✓				✓		
QTL/A 1 D		✓	✓				✓	✓	✓
QTL 1 D FTE		✓	✓				✓		✓
QTL/A 1 ST FT		✓	✓				✓		✓
QTL/A 1 ST FT-RH		✓	✓					✓	
QTL 1 ST FTE		✓	✓				✓		✓
QTL 1 SS E		✓	✓				✓		✓
QTL 1 IS FTE		✓	✓				✓		
QML/A 2 D	✓			✓				✓	✓
QTL/A 2 D		✓		✓					✓
QTL/A 2 ST FT		✓		✓					✓
QTL/A 2 ST FT-RH		✓		✓				✓	
QML/A 3 D	✓				✓				✓
QTL/A 3 D		✓			✓			✓	✓
QTL/A 3 ST FT		✓			✓				✓
QTL/A 3 ST FT-RH		✓			✓			✓	
QML 1 VFT	✓		✓				✓		✓
QTL 1 VFT		✓	✓				✓		✓
QML 2 VFT	✓			✓					✓
QTL 2 VFT		✓		✓					✓
QML 1.1 VFT	✓			✓					✓
QTL 1.1 VFT				✓					✓
QML 3 VFT	✓				✓				✓
QTL 3 VFT		✓			✓				✓
QTL 1.2 VFT		✓			✓				✓
QTL 4 VFT		✓				✓			✓
QTL 1.3 VFT		✓				✓			✓

CALPEDA ROMANIA - INFINITY PUMPS SRL
Tel: 0268.33.47.47 / 0722.244.944
vanzari@calpeda.ro | www.calpeda.ro

Power	Rotation speed		Starting				Typology		
kW	Fixed Speed	Variable speed	D.O.L.	Y/Δ	Soft start	Impedance stator	Electromechanical	Electronic	page
0,3 ÷ 1,5	✓		✓				✓		588
0,37 ÷ 2,2	✓		✓				✓		589
0,37 ÷ 2,2	✓		✓					✓	589
0,25 ÷ 1,5	✓		✓					✓	590
0,37 ÷ 7,5	✓		✓				✓		590
0,37 ÷ 5,5	✓		✓					✓	591
0,25 ÷ 11	✓		✓					✓	591
4 ÷ 30	✓		✓				✓		592
5,5 ÷ 45	✓			✓				✓	592
4 ÷ 92	✓			✓				✓	593
5,5 ÷ 110	✓			✓			✓		594
7,5 ÷ 132	✓				✓			✓	594
5,5 ÷ 110	✓					✓	✓		595
0,25 ÷ 1,5	✓		✓					✓	596
0,37 ÷ 5,5	✓		✓					✓	596
5,5 ÷ 45	✓			✓				✓	597
4 ÷ 92	✓			✓				✓	597
0,25 ÷ 1,5	✓		✓					✓	598
0,37 ÷ 5,5	✓		✓					✓	598
5,5 ÷ 45	✓			✓				✓	599
4 ÷ 92	✓			✓				✓	599
0,37 ÷ 3,7		✓	✓					✓	600
0,37 ÷ 75		✓	✓					✓	600
0,37 ÷ 3,7		✓						✓	601
0,37 ÷ 75		✓						✓	601
0,37 ÷ 3,7		✓						✓	602
0,37 ÷ 75		✓						✓	602
0,37 ÷ 3,7		✓						✓	603
0,37 ÷ 75		✓						✓	603
0,37 ÷ 75		✓						✓	604
0,37 ÷ 75		✓						✓	604
0,37 ÷ 75		✓						✓	605

CALPEDA ROMANIA - INFINITY PUMPS SRL
Tel: 0268.33.47.47 / 0722.244.944
vanzari@calpeda.ro | www.calpeda.ro

Control panels

QM Control panel for 1 pump with single-phase motor, direct starting

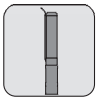

Code	Type	Capacitor **450Vc**	Motor 230V - 1~ **kW**	Dimensions *HxBxP mm*
44017940000	**QM 6,3**	6,3 µF	0,3	200x75x76
44017950000	**QM 20**	20 µF	0,55 - 0,75	200x75x76
44017960000	**QM 25**	25 µF	0,9 -1,1	200x75x76
44017990000	**QM 30**	30 µF	0,9 -1,1	200x75x76

Construction
Control panel with ON-OFF switch and capacitor, for 1 pump with single-phase motor without built-in capacitor.

Technical data
- Mains single-phase 230V ±10% 50/60 Hz (other voltages on request).
- Ambient temperature from -5 °C to +40 °C.
- Protection IP 55.

Components
- Thermoplastic case.
- ON-OFF switch with lamp
- Capacitor
- Terminal board
- Cable glands

QM Control panel for 1 pump with single-phase motor, direct starting

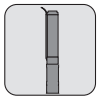

Code	Type	Protector max **A**	Capacitor **450Vc**	Motor 230V - 1~ **kW**	Dimensions *HxBxP mm*
44017950004	**QM 4-16**	4	16 µF	0,37	200x75x76
44017950007	**QM 5-20**	5	20 µF	0,55	200x75x76
44017960004	**QM 5-25**	5	25 µF	0,55	200x75x76
	QM 6-20	6	20 µF	0,75	200x75x76
44017960009	**QM 7-25**	7	25 µF	0,9	200x75x76
44017990001	**QM 7-30**	7	30 µF	0,75	200x75x76
44017960007	**QM 8-25**	8	25 µF	1,1	200x75x76
44017990004	**QM 8-30**	8	30 µF	1,1	200x75x76
44018000001	**QM 10-40**	10	40 µF	1,1	200x75x76
44018000000	**QM 12-35**	12	35 µF	1,5	200x75x76

Construction
Control panel with ON-OFF switch, circuit breaker and capacitor, for 1 submersible pump with single-phase motor without built-in capacitor.

Technical data
- Mains single-phase 230V ±10% 50/60 Hz (other voltages on request).
- Ambient temperature from -5 °C to +40 °C.
- Protection IP 55.

Components
- Thermoplastic case.
- ON-OFF switch with lamp
- Thermal device
- Capacitor
- Terminal board
- Cable glands

CALPEDA ROMANIA - INFINITY PUMPS SRL
Tel: 0268.33.47.47 / 0722.244.944
vanzari@calpeda.ro | www.calpeda.ro

Control panels

M COMP Control panel for 1 pump with single-phase motor, direct starting

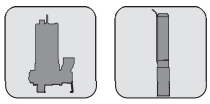

Code	Type	Protector max **A**	Capacitor **450Vc**	Motor 230V - 1~ **kW**	Dimensions *HxBxP mm*
44020000000	**M COMP 4-16**	4,5	16 µF	0,37	220x210x110
44020001000	**M COMP 4-20**	4,5	20 µF	0,55	220x210x110
44020010000	**M COMP 5-20**	5	20 µF	0,55	220x210x110
44020011000	**M COMP 5-25**	5	25 µF	0,55	220x210x110
44020021000	**M COMP 6-20**	6	20 µF	0,75	220x210x110
44020023000	**M COMP 6-35**	6	35 µF	0,75	220x210x110
44020031000	**M COMP 7-25**	7	25 µF	0,9	220x210x110
44020032000	**M COMP 7-30**	7	30 µF	0,9	220x210x110
44020040000	**M COMP 8-25**	8	25 µF	1,1	220x210x110
44020041000	**M COMP 8-30**	8	30 µF	1,1	220x210x110
44020052000	**M COMP 10-35**	10	35 µF	1,1	220x210x110
44020053000	**M COMP 10-40**	10	40 µF	1,1	220x210x110
44020060000	**M COMP 12-35**	12	35 µF	1,5	220x210x110
44020062000	**M COMP 12-50**	12	50 µF	1,5	220x210x110
44020063000	**M COMP 12-60**	12	60 µF	1,5	220x210x110
44020081000	**M COMP 16-70**	16	70 µF	2,2	220x210x110

Construction
Control panel with ON-OFF switch and capacitor for 1 pump with single-phase motor.
Suitable for use with LVBT board for level control.
Protection is provided by means of a main bi-polar switch with a phase. protected against overload by means of a thermal element.

Technical data
- Mains single-phase 230V ±10% 50/60 Hz (other voltages on request).
- Ambient temperature from -5 °C to +40 °C.
- Protection IP 44.
- Control through pressure switch (pressure booster set).
- Control through float switch (for filling a tank).

Components
- Thermoplastic case.
- ON-OFF switch with pilot lamp with thermal protector.
- Capacitor.
- Terminal board.
- Terminals for LVBT board for level control.
- In/Out cable glands.

On request:
- LVBT card for level control.

PFC-M Control panel for 1 pump with single-phase motor, PF control

Type	Setting **A**	Capacitor **450Vc**	Motor 230V - 1~ **kW**	Dimensions *HxBxP mm*
PFC-M 18-16	1 - 18	16 µF	0,37	220x210x110
PFC-M 18-20	1 - 18	20 µF	0,55	220x210x110
PFC-M 18-25	1 - 18	25 µF	0,55	220x210x110
PFC-M 18-30	1 - 18	30 µF	0,75	220x210x110
PFC-M 18-35	1 - 18	35 µF	0,75	220x210x110
PFC-M 18-40	1 - 18	40 µF	1,1	220x210x110
PFC-M 18-50	1 - 18	50 µF	1,5	220x210x110
PFC-M 18-60	1 - 18	60 µF	1,5	220x210x110
PFC-M 18-70	1 - 18	70 µF	2,2	220x210x110

Construction
Control panel for controlling one pump with single-phase motor. Electronic control of the operation and dry-running protection through the power factor (PF) control.
The installation of level probes into the well is not required.
It stops the pump in case of lack of air cushion in the pressure vessel (patented system).
Displayed operating data and alarms available in four languages.

Technical data
- Mains single-phase 230V ±10% 50/60 Hz.
- Max output current: 18 A.
- Ambient temperature from -5 °C to +40 °C.
- Relative humidity: from 20% to 90% without condensation
- Protection IP 55.
- Control through pressure switch (pressure booster set).
- Control through float switch (for filling a tank).
- Alarm output signal.
- Constructed in accordance with: IEC/EN 60439-1.

Setting
- Min – Max voltage range.
- Motor rated current.
- Power factor (PF) value for dry-running protection.
- Up to four programmable restarts in case of no water condition.

Alarms (with pump stop)
- Mains failure.
- Undervoltage and overvoltage.
- Motor overload.
- No water.
- No air cushion in the pressure vessel.

Components
- Thermoplastic case. - Capacitor. - Terminal board.
- Display : 2x16 characters. - 6 button key board.
- In/Out Cable glands.

On request: - RA 100 control panel for remote alarm.

CALPEDA ROMANIA - INFINITY PUMPS SRL
Tel: 0268.33.47.47 / 0722.244.944
vanzari@calpeda.ro | www.calpeda.ro

Control panels

QML/A 1 D Control panel for 1 pump with single-phase motor, direct starting

Code	Type	Motor 230V - 1~ kW	Setting A	Dimensions HxBxP mm
14054460000	**QML/A 1 D 12A-FA**	0,25 - 1,5	1 - 12	250x205x115
24054460000	**QML/A 1 D 12A-FA 20**	0,25 - 1,5	1 - 12	250x205x115
24054460001	**QML/A 1 D 12A-FA 25**	0,25 - 1,5	1 - 12	250x205x115
	QML/A 1 D 3 FT	2,2 - 3	13 - 18	400x300x160

Construction

Control panel for 1 pump with single-phase motor, direct starting for pressure booster sets and submersible drainage pumps.
Arranged for the capacitor internal connection (for pumps without built-in capacitor).
For pressure booster sets:
- with working time-measuring system that stops the pump in case of lack of air cushion in the pressure vessel.
- dry-running protection with float switch or level control probes.

For submersible drainage pumps:
- automatic operating test of the pump every set hours of inactivity (with pump in the automatic operating mode).
- Pump control with signals coming from:
  - **2 float switches**: one for starting-up and stopping pump, one for the alarm maximum level (optional).
  - **3 float switches**: one for starting-up pump, one for stopping the pump and one for the alarm maximum level (optional).

Pump operation controlled by an electronic board type MPS 3000 with microprocessor which allows different modes of operation of the pump.

Technical data

- Mains single-phase 230V ±10% 50/60 Hz (other voltages on request).
- Ambient temperature from -5 °C to +40 °C.
- Protection IP 55.

Components

- Thermoplastic case. - Door lock master switch.
- Fuses for power line. - Fuses for auxiliary circuit.
- Electronic board type MPS 3000 with microprocessor.
- Terminals for pressure trasducer / level probes.
- Connection terminals for thermal protector.
- Connection terminals for the RA 100 - RA 100A type.
- Terminals for pressure switch connection.
- Terminals for float switch connection against dry-running.
- Cable glands.
- Remote alarm control panel or volt free contact module.

ON REQUEST:

- RA 100 - RA 100A control panel for remote alarm.
- Volt free contact control panel Q-MSP 9M.

T COMP Control panel for 1 pump with three-phase motor

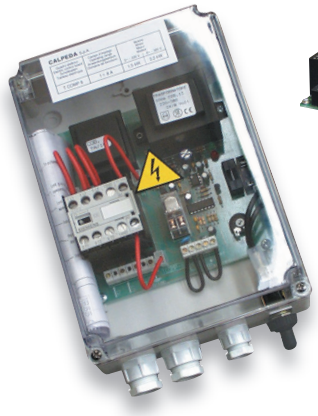

LVBT

Code	Type	Protector A	Motor 230V - 3~ kW	Motor 400V - 3~ kW	Dimensions HxBxP mm
14013130000	**T COMP 8**	1 ÷ 8	0,37 ÷ 1,5	0,5 ÷ 2,2	170x145x85
14013480000	**T COMP 10**	7 ÷ 10	---	3 ÷ 3,7	230x180x155
14024250000	**T COMP 12**	9 ÷ 12	2,2	4	230x180x155
14013560000	**T COMP 16**	11 ÷ 16	3	5,5	230x180x155
14013490000	**T COMP 20**	14 ÷ 20	3,7 - 4	7,5	230x180x155

Construction

Control panel and protection for 1 pump with three-phase motor.
Arranged for the LVBT level control internal connection against dry running (T COMP8 model has the level control as a standard).
Control pumps with pressure switch and float-type switch.

Technical data

- Mains 230V or 400V ±10% 50/60 Hz (other voltages on request).
- Ambient temperature from -5 °C to +40 °C.
- Protection IP 44.

Components

- Thermoplastic case.
- ON-OFF control switch
- Fuse holder - Contactor - Thermal relay
- Fuses for change of voltage: 230 V or 400 V - Transformer
- Terminals for pressure switch or float switch connection
- Terminals for LVBT board (for T COMP 10,12,16,20 models)
- Green LED indicator: voltage ON
- Red LED indicator: thermic block
- Cable glands

ON REQUEST:
LVBT board for level control (for T COMP 10,12,16,20 models)

CALPEDA ROMANIA - INFINITY PUMPS SRL
Tel: 0268.33.47.47 / 0722.244.944
vanzari@calpeda.ro | www.calpeda.ro

Control panels

PFC-T Control panel for 1 pump with three-phase motor, PF control

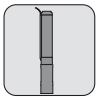

Code	Type	Motor 400V - 3~ kW	Setting A	Dimensions *HxBxP mm*
14058390000	**PFC-T 16/A**	0,37 - 5,5	1 - 16	250x205x105

Construction
Control panel for controlling 1 pump with three-phase motor. Electronic control of the operation and dry-running protection through the power factor (PF) control.
The installation of level probes into the well is not required.
It stops the pump in case of lack of air cushion in the pressure vessel
Displayed operating data and alarms, available in four languages.

Technical data
- Mains three-phase 400V - 3 ~ ±10% 50/60 Hz
- Output current: 16 A
- Ambient temperature from -5 °C to +40 °C.
- Relative humidity: from 20% to 90% without condensation
- Protection IP 55.
- Control through pressure switch (pressure booster set)
- Control through float switch (for filling a tank)
- Alarm output signal
- Constructed in accordance with: IEC/EN 60439-1.

Setting
- Min – Max voltage range
- Motor rated current
- Power factor (PF) value for dry-running protection
- Up to four programmable restarts in case of no water condition

Alarms (with pump stop)
- Phase failure - Wrong phase sequence
- Undervoltage and overvoltage
- Motor overload
- No water
- No air cushion in the pressure vessel

Components
- Thermoplastic case.
- Terminal board.
- Display : 2x16 characters. - 6 button key board.
- In/Out Cable glands.

On request: - RA 100 control panel for remote alarm.

QTL/A 1 D Control panel for 1 pump with three-phase motor, direct starting

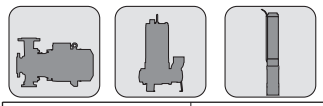

Code	Type	Motor 400V - 3~ kW	Setting A	Dimensions *HxBxP mm*
14054470000	**QTL/A 1 D 12A-FA**	0,25 - 5,5	1 - 12	250x205x105
14054480000	**QTL/A 1 D 7,5 FT**	7,5	13 - 18	400x300x160
14054490000	**QTL/A 1 D 9,2 FT**	9,2	17 - 23	400x300x160
14054500000	**QTL/A 1 D 11 FT**	11	20 - 25	400x300x160

Construction
Control panel for 1 pump with three-phase motor, direct starting for pressure booster sets and submersible drainage pumps.
For pressure booster sets:
- with working time-measuring system that stops the pump in case of lack of air cushion in the pressure vessel.
- dry-running protection with float switch or level control probes.

For submersible drainage pumps:
- automatic operating test of the pump every set hours of inactivity (with pump in the automatic operating mode).
- Pump control with signals coming from:
  - **2 float switches**: one for starting-up and stopping pump, one for the alarm maximum level (optional).
  - **3 float switches**: one for starting-up pump, one for stopping the pump and one for the alarm maximum level (optional).

Pump operation controlled by an electronic board type MPS 3000 with microprocessor which allows different modes of operation of the pump.

Technical data
- Mains 400V 3 ~ ±10% 50/60 Hz (other voltages on request).
- Ambient temperature from -5 °C to +40 °C.
- Protection IP 55.

Components
- Thermoplastic case (metallic for 7,5-9,2-11kW).
- Door lock master switch.
- Fuses for power line. - Fuses for auxiliary circuit.
- Starting contactor and thermal relay (for 7,5-9,2-11kW).
- Electronic board type MPS 3000 with microprocessor.
- Terminals for pressure trasducer / level probes.
- Connection terminals for thermal protector.
- Connection terminals for the RA 100 - RA 100A type.
- Terminals for pressure switch connection.
- Terminals for float switch connection against dry-running.
- Terminals for remote signals
- Cable glands.

ON REQUEST:
- RA 100 - RA 100A control panel for remote alarm.
- Volt free contact control panel Q-MSP 9M.

CALPEDA ROMANIA - INFINITY PUMPS SRL
Tel: 0268.33.47.47 / 0722.244.944
vanzari@calpeda.ro | www.calpeda.ro

Control panels

QTL 1 D FTE Control panel for 1 pump with three-phase motor, direct starting

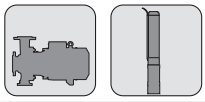

Code	Type	Motor 400V - 3~ kW	Setting A	Dimensions HxBxP mm
14029820000	**QTL 1 D 4 FTE**	4	6,3 - 10	400x300x160
	QTL 1 D 5,5 FTE	5,5	9 - 12	400x300x160
	QTL 1 D 7,5 FTE	7,5	13 - 18	400x300x160
14050250000	**QTL 1 D 9,2 FTE**	9,2	17 - 23	400x300x160
14037630000	**QTL 1 D 11 FTE**	11	20 - 25	400x300x160
	QTL 1 D 15 FTE	15	24 - 32	500x350x200
	QTL 1 D 18,5 FTE	18,5	32 - 38	500x350x200
	QTL 1 D 22 FTE	22	35 - 50	500x350x200
	QTL 1 D 30 FTE	30	46 - 65	500x350x200

Construction
Electromechanical control panel for 1 pump with three-phase motor, direct starting.
Operating signals by E 1000 led card.
Dry-running protection with float switch.
Construction with SRLE level control for probes connection against dry-running on request .

Technical data
- Mains 400V 3 ~ ±10% 50/60 Hz (other voltages on request).
- Ambient temperature from -5 °C to +40 °C.
- Protection IP 55.

Components
- Metal case. - Door lock master switch.
- Power circuit fuses. - Fuses for auxiliary circuit.
- Starting contactor. - Thermal relay
- Transformer. - E 1000 led card.
- Terminals for connection pump operating signal.
- Terminals for float switch connection against dry-running.
- Cable glands.

ON REQUEST:
- RLE level control for probes against dry running
- RLE level control for pump operating probes.
- Voltmeter. - Ammeter.

QTL/A 1 ST FT Control panel for 1 pump with three-phase motor, Y/Δ starting

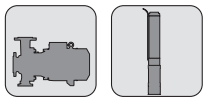

Code	Type	Motor 400V - 3~ Power kW	Current A	Dimensions HxBxP mm
14054510000	**QTL/A 1 ST 5,5 FT**	5,5	11 - 15	600x400x200
14054520000	**QTL/A 1 ST 7,5 FT**	7,5	12 - 17	600x400x200
14054530000	**QTL/A 1 ST 11 FT**	9,2 - 11	16 - 24	600x400x200
14054540000	**QTL/A 1 ST 15 FT**	15	23 - 31	600x400x200
14054550000	**QTL/A 1 ST 18,5 FT**	18,5	30 - 39	600x400x200
14054560000	**QTL/A 1 ST 22 FT**	22	35 - 43	700x500x200
14054570000	**QTL/A 1 ST 30B FT**	30	42 - 55	700x500x200
14054580000	**QTL/A 1 ST 30A FT**	30	55 - 65	700x500x200
14054590000	**QTL/A 1 ST 37 FT**	37	61 - 84	800x600x250
14054600000	**QTL/A 1 ST 45 FT**	45	80 - 105	800x600x250

Construction
Control panel for 1 pump with three-phase motor, Y/Δ starting for pressure booster sets, with working time-measuring system that stops the pump in case of lack of air cushion in the pressure vessel.
Pump operation controlled by an electronic card type MPS 3000 with microprocessor with different pump operating modes.
Dry-running protection with float switch or level control probes.

Technical data
- Mains 400V 3 ~ ±10% 50/60 Hz (other voltages on request).
- Ambient temperature from -5 °C to +40 °C.
- Protection IP 55.

Components
- Metal case. - Door lock master switch.
- Fuses for power line. - Fuses for auxiliary circuit.
- Starting contactors. - Thermal relay. - Transformer.
- Electronic board MPS 3000 with microprocessor.
- Terminals for pressure trasducer / level probes.
- Connection terminals for thermal protector.
- Connection terminals for the RA 100 - RA 100A type.
- Terminals for motor connection.
- Terminals for connection pressure switch of pump operating.
- Terminals for float switch connection against dry-running.
- Terminals for remote signals
- Cable glands.

ON REQUEST:
- RA 100 - RA 100A control panel for remote alarm.
- Voltmeter. - Ammeter.

CALPEDA ROMANIA - INFINITY PUMPS SRL
Tel: 0268.33.47.47 / 0722.244.944
vanzari@calpeda.ro | www.calpeda.ro

Control panels

QTL/A 1 ST FT-RH Control panel for 1 **submersible drainage** pump with three-phase motor, Y/Δ starting

Code	Type	Motor Power kW	400V - 3~ Current A	Dimensions HxBxP mm
14054610000	**QTL/A 1 ST 4 FT-RH**	4	7 - 11	600x400x200
14054620000	**QTL/A 1 ST 5,5 FT-RH**	5,5	11 - 15	600x400x200
14054630000	**QTL/A 1 ST 7,5 FT-RH**	7,5	12 - 17	600x400x200
14054640000	**QTL/A 1 ST 11 FT-RH**	9,2 - 11	16 - 24	600x400x200
14054650000	**QTL/A 1 ST 15 FT-RH**	15	23 - 31	600x400x200
14054660000	**QTL/A 1 ST 18,5 FT-RH**	18,5	30 - 39	600x400x200
14054670000	**QTL/A 1 ST 22 FT-RH**	22	35 - 43	700x500x250
14054680000	**QTL/A 1 ST 30B FT-RH**	30	42 - 55	700x500x250
14054690000	**QTL/A 1 ST 30A FT-RH**	30	55 - 65	700x500x250
14054700000	**QTL/A 1 ST 37 FT-RH**	37	61 - 84	800x600x250
14054710000	**QTL/A 1 ST 45 FT-RH**	45	80 - 105	800x600x250
14054720000	**QTL/A 1 ST 55 FT-RH**	55	100 - 125	800x600x250
14054730000	**QTL/A 1 ST 75 FT-RH**	75	120 - 150	900x600x300
14054740000	**QTL/A 1 ST 92 FT-RH**	92	155 - 255	1100x700x250

Construction

Control panel with protection for 1 submersible drainage pump with three-phase motor, Y/Δ starting.
Operation managed by the MPS 3000 electronic circuit board that has the following functions:
- automatic operating test of the pump every set hours of inactivity (with pump in the automatic operating mode).
- Pump control with signals coming from:
  - **2 float switches:** for starting-up and stopping pump, for the alarm (maximum level is optional).
  - **3 float switches:** for starting-up pump, for stopping the pump and for the alarm (maximum level is optional).

Technical data

- Mains 400V 3 ~ ±10% 50/60 Hz (other voltages on request).
- Ambient temperature from -5 °C to +40 °C.
- Protection IP 55.

Components

- Metal case.
- Line selector switch with door-locking device.
- Power line fuses.
- Auxiliary circuit fuses. - Contactors.
- Y/Δ timer. - Thermal relay. - Level regulator.
- MPS 3000 type circuit board with microprocessor.
- Terminals for pressure trasducer / level probes.
- Connection terminals for thermal protector.
- Connection terminals for the RA 100 - RA 100A type.
- Connection terminals for float switches or level probes.
- Connection terminals for water seepages probe.
- Cable glands.

ON REQUEST:

- Volt free contact control panel Q-MSP 9M.
- RA 100 - RA 100A control panel for remote alarm.
- Voltmeter. - Ammeter.

CALPEDA ROMANIA - INFINITY PUMPS SRL
Tel: 0268.33.47.47 / 0722.244.944
vanzari@calpeda.ro | www.calpeda.ro

Control panels

QTL 1 ST FTE Control panel for 1 pump with three-phase motor, Y/Δ starting

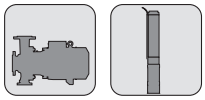

Code	Type	Motor Power kW	400V - 3~ Current A	Dimensions HxBxP mm
	QTL 1 ST 5,5 FTE	5,5	11 - 15	500x350x200
	QTL 1 ST 7,5 FTE	7,5	12 - 17	500x350x200
14029200000	**QTL 1 ST 11 FTE**	9,2 - 11	16 - 24	500x350x200
	QTL 1 ST 15 FTE	15	23 - 31	500x350x200
14029440000	**QTL 1 ST 18,5 FTE**	18,5	30 - 39	500x350x200
14031710000	**QTL 1 ST 22 FTE**	22	35 - 43	600x400x200
	QTL 1 ST 30B FTE	30	42 - 55	600x400x200
14048380000	**QTL 1 ST 30A FTE**	30	55 - 65	600x400x200
14048520000	**QTL 1 ST 37 FTE**	37	61 - 84	700x500x200
14047050000	**QTL 1 ST 45 FTE**	45	80 - 105	700x500x200
	QTL 1 ST 55 FTE	55	100 - 125	700x500x200
	QTL 1 ST 75 FTE	75	120 - 160	800x600x250
	QTL 1 ST 92 FTE	92	140 - 198	800x600x250
	QTL 1 ST 110 FTE	110	180 - 250	800x600x250

Construction
Electromechanical control panel for 1 pump with three-phase motor, Y/Δ starting.
Operating signals by E 1000 led board.
Dry-running protection with float switch.
Construction with SRLE level control for probes connection against dry-running on request .

Components
- Metal case. - Door lock master switch. - Fuses for power line.
- Fuses for auxiliary circuit. - Starting contactors. - Thermal relay.
- Y/Δ timer. - Transformer. - E 1000 led board.
- Terminals for motor connection.
- Terminals for connection of pump operating signal.
- Terminals for float switch connection against dry-running.
- Cable glands.

Technical data
- Mains 400V 3 ~ ±10% 50/60 Hz (other voltages on request).
- Ambient temperature from -5 °C to +40 °C.
- Protection IP 55.

ON REQUEST:
- RLE level control for probes against dry running.
- RLE level control for pump operating probes.
- Voltmeter. - Ammeter.

QTL 1 SS E Control panel for 1 pump with three-phase motor, start/stop with soft starter

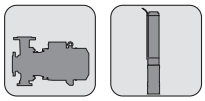

Code	Type	Motor 400V - 3~ kW	Max current outpu max A	Dimensions HxBxP mm
	QTL 1 SS 7,5 E	7,5	17	700x500x250
14053880000	**QTL 1 SS 15 E**	9,2 - 11 - 15	30	700x500x250
14028440000	**QTL 1 SS 22 E**	18,5 - 22	45	700x500x250
	QTL 1 SS 30 E	26 - 30	60	900x600x300
14045900000	**QTL 1 SS 37 E**	37	75	900x600x300
	QTL 1 SS 45 E	45	85	900x600x300
	QTL 1 SS 55 E	55	110	900x600x300
	QTL 1 SS 63 E	63	125	1100x700x300
	QTL 1 SS 75 E	75	142	1100x700x300
	QTL 1 SS 90 E	90	190	1200x800x400
	QTL 1 SS 132 E	110 - 132	245	1200x800x400

Construction
Control panel for 1 pump with three-phase motor, start/stop with soft starter.
Operating signals on E 1000 led board.
Application: control of submersible motor with great cable length and surface motors.
Dry-running protection with float switch.
Construction with SRLE level control for probes connection against dry-running on request .

Components
- Metal case. - Door lock master switch.
- Fuses for power line. - Fuses for auxiliary circuit.
- Soft starter - Transformer.
- By pass contactors (built into the soft starter) - E 1000 led board.
- Terminals for float switch or level probes connection for pump operating.
- Terminals for float switch or level probes connection against dry-running.
- Cable glands.

Technical data
- Mains 400V 3 ~ ±10% 50/60 Hz (other voltages on request).
- Ambient temperature from -5 °C to +40 °C.
- Protection IP 55.

ON REQUEST:
- RLE level control for connection level probes of pump operating.
- RLE level control for probes against dry running.
- Voltmeter. - Ammeter.

CALPEDA ROMANIA - INFINITY PUMPS SRL
Tel: 0268.33.47.47 / 0722.244.944
vanzari@calpeda.ro | www.calpeda.ro

Control panels

QTL 1 IS FTE Control panel for 1 pump with three-phase motor, with Stator Impedence starter

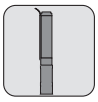

Code	Type	Motor Power **kW**	400V - 3~ Current **A**	Dimensions *HxBxP mm*
---	**QTL 1 IS 5,5 FTE-2RL**	5,5	11 - 15	
	QTL 1 IS 7,5 FTE-2RL	7,5	12 - 17	
	QTL 1 IS 11 FTE-2RL	9,2 - 11	16 - 24	
14052700000	**QTL 1 IS 15 FTE-2RL**	15	23 - 31	
	QTL 1 IS 18,5 FTE-2RL	18,5	30 - 39	
	QTL 1 IS 22 FTE-2RL	22	35 - 43	
	QTL 1 IS 30 FTE-2RL	30	42- 65	
	QTL 1 IS 37 FTE-2RL	37	61 - 84	
	QTL 1 IS 45 FTE-2RL	45	80 - 105	
	QTL 1 IS 55 FTE-2RL	55	100 - 125	
	QTL 1 IS 75 FTE-2RL	75	120 - 160	
	QTL 1 IS 92 FTE-2RL	92	140 - 198	
	QTL 1 IS 110 FTE-2RL	110	180 - 250	

Construction

Electromechanical control panel for 1 submersible pump with three-phase motor, with Stator Impedence starter.
Operating signals on led board type E 1000.
Application : submersible motors control with great cable length.
Construction with SRLE level control for probes connection against dry-running .

Technical data

- Mains 400V 3 ~ ±10% 50/60 Hz (other voltages on request).
- Ambient temperature from -5 °C to +40 °C.
- Protection IP 55.

Components

- Metal case. - Door lock master switch.
- Fuses for power line. - Fuses for auxiliary circuit.
- Stator Impedence - By pass contactors
- Transformer. - E 1000 led board.
- RLE level control for connection level probes of pump control.
- RLE level control for probes against dry running.
- Terminals for connection level probes or float switch for operating pump.
- Terminals for level probes or float switch connection against dry-running.
- Cable glands.

ON REQUEST:

- Voltmeter. - Ammeter.

CALPEDA ROMANIA - INFINITY PUMPS SRL
Tel: 0268.33.47.47 / 0722.244.944
vanzari@calpeda.ro | www.calpeda.ro

Control panels

QML/A 2 D Control panel for 2 pumps with single-phase motor, direct starting

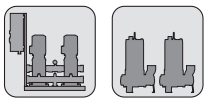

Code	Type	Motor 230V - 1~ kW	Protector max **A**	Dimensions *HxBxP mm*
14054750000	**QML/A 2 D 12A-FA**	0,25 - 1,5	1 - 12	310x235x125
24054750000	**QML/A 2 D 12A-FA 20**	0,25 - 1,5	1 - 12	310x235x125
24054750001	**QML/A 2 D 12A-FA 25**	0,25 - 1,5	1 - 12	310x235x125
24054750002	**QML/A 2 D 12A-FA 30-85**	0,25 - 1,5	1 - 12	395x315x135
24054750003	**QML/A 2 D 12A-FA 35-85**	0,25 - 1,5	1 - 12	395x315x135
	QML/A 2 D 3 FT	2,2 - 3	13 - 18	500x350x160

Construction

Control panel for 2 pumps with single-phase motor, direct starting for pressure booster sets and submersible drainage pumps.
Arranged for the capacitor internal connection (for pumps without built-in capacitor).
For pressure booster sets:
- with working time-measuring system that stops the pump in case of lack of air cushion in the pressure vessel.
- dry-running protection with float switch or level control probes.

For submersible drainage pumps:
- pump changing at every pump start.
- working pumps changing after 30 minutes of uninterrupted operation.
- automatic operating test of each individual pump every set hours of inactivity (with pumps in the automatic functioning mode).
- Pump control with signals coming from:
  - **3 float switches:** for starting-up and stopping pump 1, for starting-up and stopping pump 2, for the alarms (maximum level is optional).
  - **4 float switches:** for starting-up pump 1, for starting up pump 2, for stopping the pumps and for the alarms (maximum level is optional).

Pump operation controlled by an electronic board type MPS 3000 with microprocessor which allows different modes of operation of the pump.

Technical data

- Mains single-phase 230V ±10% 50/60 Hz (other voltages on request).
- Ambient temperature from -5 °C to +40 °C.
- Protection IP 55.

Components

- Thermoplastic case.- Door lock master switch.
- Fuses for power line. - Fuses for auxiliary circuit.
- Starting relay.
- Two capacitor (on request)
- Electronic board type MPS 3000 with microprocessor.
- Terminals for pressure trasducer / level probes.
- Connection terminals for thermal protector.
- Connection terminals for the RA 100 - RA 100A type.
- Terminals for pressure switch connection.
- Terminals for float switch or float switch connection against dry-running.
- Terminals for remote signals
- Cable glands.

ON REQUEST:

- Volt free contact control panel Q-MSP 13M.
- RA 100 - RA 100A control panel for remote alarm.

QTL/A 2 D Control panel for 2 pumps with three-phase motor, direct starting

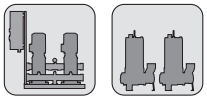

Code	Type	Motor 400V - 3~ kW	Setting max **A**	Dimensions *HxBxP mm*
14054760000	**QTL/A 2 D 12A-FA**	0,25 - 5,5	1 - 12	310x235x125

Construction

Control panel for 2 pumps with three-phase motor, direct starting for pressure booster sets and submersible drainage pumps.
For pressure booster sets:
- with working time-measuring system that stops the pump in case of lack of air cushion in the pressure vessel.
- dry-running protection with float switch or level control probes.

For submersible drainage pumps:
- pump changing at every pump start.
- working pumps changing after 30 minutes of uninterrupted operation.
- automatic operating test of each individual pump every set hours of inactivity (with pumps in the automatic functioning mode).
- Pump control with signals coming from:
  - **3 float switches:** for starting-up and stopping pump 1, for starting-up and stopping pump 2, for the alarms (maximum level is optional).
  - **4 float switches:** for starting-up pump 1, for starting up pump 2, for stopping the pumps and for the alarms (maximum level is optional).

Pump operation controlled by an electronic board type MPS 3000 with microprocessor which allows different modes of operation of the pump.

Technical data

- Mains 400V 3 ~ ±10% 50/60 Hz (other voltages on request).
- Ambient temperature from -5 °C to +40 °C.
- Protection IP 55.

Components

- Thermoplastic case.
- Door lock master switch.
- Fuses for power line. - Fuses for auxiliary circuit.
- Electronic board type MPS 3000 with microprocessor.
- Terminals for pressure trasducer / level probes.
- Connection terminals for thermal protector.
- Connection terminals for the RA 100 - RA 100A type.
- Terminals for pressure switch connection.
- Terminals for float switch or flow switch connection against dry-running.
- Terminals for remote signals
- Cable glands.

ON REQUEST:

- Volt free contact control panel Q-MSP 13M.
- RA 100 - RA 100A control panel for remote alarm.

CALPEDA ROMANIA - INFINITY PUMPS SRL
Tel: 0268.33.47.47 / 0722.244.944
vanzari@calpeda.ro | www.calpeda.ro

Control panels

QTL/A 2 ST FT Control panel for 2 pumps with three-phase motor, Y/Δ starting

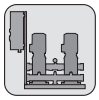

Code	Type	Motor Power kW	400V - 3~ Current A	Dimensions HxBxP mm
14054770000	**QTL/A 2 ST 5,5 FT**	5,5	11 - 15	700x500x200
14054780000	**QTL/A 2 ST 7,5 FT**	7,5	12 - 17	700x500x200
14054790000	**QTL/A 2 ST 11 FT**	9,2 - 11	16 - 24	700x500x200
14054800000	**QTL/A 2 ST 15 FT**	15	23 - 31	700x500x200
14054810000	**QTL/A 2 ST 18,5 FT**	18,5	30 - 39	700x500x200
14054820000	**QTL/A 2 ST 22 FT**	22	35 - 43	900x600x250
14054830000	**QTL/A 2 ST 30B FT**	30	42 - 55	900x600x250
14054840000	**QTL/A 2 ST 30A FT**	30	55 - 65	900x600x250
14054850000	**QTL/A 2 ST 37 FT**	37	61 - 84	1100x700x250
14054860000	**QTL/A 2 ST 45 FT**	45	80 - 105	1100x700x250

Construction

Control panel for 2 pumps with three-phase motor, Y/Δ starting, for pressure booster sets, with working time-measuring system that stops the pump in case of lack of air cushion in the pressure vessel.
Pump operation cascade mode controlled by an electronic board type MPS 3000 with microprocessor which allows different operation modes:
Dry-running protection with float switch or level control probes.

Technical data

- Mains 400V ±10% 50/60 Hz (other voltages on request).
- Ambient temperature from -5 °C to +40 °C.
- Protection IP 55.

Components

- Metal case. - Door lock master switch.
- Fuses for power line. - Fuses for auxiliary circuit.
- Starting contactors. - Thermal relay. - Y/Δ timers. - Transformer.
- Electronic board type MPS 3000 with microprocessor.
- Terminals for pressure trasducer / level probes.
- Connection terminals for thermal protector.
- Connection terminals for the RA 100 - RA 100A type.
- Terminals for pressure switch connection.
- Terminals for float switch or float switch connection against dry-running.
- Terminals for remote signals - Cable glands.

ON REQUEST:

- Volt free contact control panel Q-MSP 13M.
- RA 100 - RA 100A control panel for remote alarm.
- Voltmeter. - Ammeter.

QTL/A 2 ST FT-RH Electric control panel for 2 **drainage** pumps with three-phase motor, Y/Δ starting

Code	Type	Motor Power kW	400V - 3~ Current A	Dimensions HxBxP mm
14054870000	**QTL/A 2 ST 4 FT-RH**	4	7 - 11	700x500x200
14054880000	**QTL/A 2 ST 5,5 FT-RH**	5,5	11 - 15	700x500x200
14054890000	**QTL/A 2 ST 7,5 FT-RH**	7,5	12 - 17	700x500x200
14054900000	**QTL/A 2 ST 11 FT-RH**	9,2 - 11	16 - 24	700x500x200
14054910000	**QTL/A 2 ST 15 FT-RH**	15	23 - 31	700x500x200
14054920000	**QTL/A 2 ST 18,5 FT-RH**	18,5	30 - 39	700x500x200
14054930000	**QTL/A 2 ST 22 FT-RH**	22	35 - 43	900x600x250
14054940000	**QTL/A 2 ST 30B FT-RH**	30	42 - 55	900x600x250
14054950000	**QTL/A 2 ST 30A FT-RH**	30	55 - 65	900x600x250
14054960000	**QTL/A 2 ST 37 FT-RH**	37	61 - 84	1100x700x250
14054970000	**QTL/A 2 ST 45 FT-RH**	45	80 - 105	1100x700x250
14054980000	**QTL/A 2 ST 55 FT-RH**	55	100 - 125	1200x800x300
14054990000	**QTL/A 2 ST 75 FT-RH**	75	120 - 150	1200x800x300
14055000000	**QTL/A 2 ST 92 FT-RH**	92	155 - 255	1400x800x400

Construction

Control panel with protection for 2 submersible drainage pumps with three-phase motor, Y/Δ starting.
Operation managed by the MPS 3000 electronic circuit board that has the following functions:
- pump changing at every pump start.
- working pumps changing after 30 minutes of uninterrupted operation.
- automatic operating test of each individual pump every set hours of inactivity (with pumps in the automatic functioning mode).
- Pump control with signals coming from:
  - **3 float switches:** for starting-up and stopping pump 1, for starting-up and stopping pump 2, for the alarms (maximum level is optional).
  - **4 float switches:** for starting-up pump 1, for starting up pump 2, for stopping the pumps and for the alarms (maximum level is optional).

Technical data

- Mains 400V 3 ~ ±10% 50/60 Hz (other voltages on request).
- Ambient temperature from -5 °C to +40 °C.
- Protection IP 55.

Components

- Metal case.
- Door lock master switch.
- Power line fuses.
- Auxiliary circuit fuses. - Contactors.
- Y/Δ timers. - Level regulator.
- Electronic board type MPS 3000 with microprocessor.
- Terminals for pressure trasducer / level probes.
- Connection terminals for float switches.
- Connection terminals for thermal protectors.
- Connection terminals for water seepages probe.
- Connection terminals for the RA 100, RA 100A type remote alarm control panel or volt free contact module.
- Cable glands.

ON REQUEST:

- Volt free contact control panel Q-MSP 13M.
- RA 100 - RA 100A control panel for remote alarm.
- Voltmeter. - Ammeter.

CALPEDA ROMANIA - INFINITY PUMPS SRL
Tel: 0268.33.47.47 / 0722.244.944
vanzari@calpeda.ro | www.calpeda.ro

Control panels

QML/A 3 D Control panel for 3 pumps with single-phase motor, direct starting

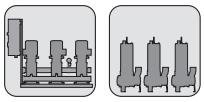

Code	Type	Motor 230V - 1~ kW	Setting max **A**	Dimensions *HxBxP mm*
14055010000	**QML/A 3 D 12A-FA**	0,25 - 1,5	1 - 12	395x315x135

Construction
Control panel for 3 pumps with single-phase motor, direct starting for pressure booster sets, with working time-measuring system that stops the pump in case of lack of air cushion in the pressure vessel.
Pump operation cascade mode controlled by an electronic board type MPS 3000 with microprocessor which allows different operation modes.
Dry-running protection with float switch or level control probes.

Technical data
- Mains single-phase 230V ±10% 50/60 Hz (other voltages on request).
- Ambient temperature from -5 °C to +40 °C.
- Protection IP 55.

Components
- Thermoplastic case.
- Door lock master switch.
- Fuses for power line. - Fuses for auxiliary circuit.
- Starting relay. - Circuit breaker.
- Electronic board type MPS 3000 with microprocessor.
- Terminals for pressure trasducer / level probes.
- Connection terminals for thermal protector.
- Connection terminals for the RA 100 - RA 100A type.
- Terminals for pressure switch connection.
- Terminals for float switch or float switch connection against dry-running.
- Terminals for remote signals
- Cable glands.

ON REQUEST:
- Volt free contact control panel Q-MSP 13M.
- RA 100 - RA 100A control panel for remote alarm.

QTL/A 3 D Control panel for 3 pumps with three-phase motor, direct starting

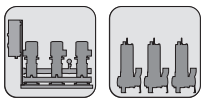

Code	Type	Motor 400V - 3~ kW	Setting max **A**	Dimensions *HxBxP mm*
14055020000	**QTL/A 3 D 12A-FA**	0,37 - 5,5	1 - 12	395x315x135

Construction
Control panel for 3 pumps with three-phase motor, direct starting, for pressure booster sets and submersible drainage pumps.
For pressure booster sets:
- with working time-measuring system that stops the pump in case of lack of air cushion in the pressure vessel.
- dry-running protection with float switch or level control probes.

For submersible drainage pumps:
- changes pumps at every pump start.
- changes working pumps after 30 minutes of uninterrupted operation.
- automatic functioning test of each individual pump every set hours of inactivity (with pumps in the automatic functioning mode).
- Pump control with signals coming from:
  - **4 float switches:** for starting-up and stopping pump, for the alarm (maximum level is optional).
  - **5 float switches:** for starting-up pump, for stopping the pumps and for the alarm (maximum level is optional).

Pump operation controlled by an electronic board type MPS 3000 with microprocessor which allows different modes of operation of the pump.

Technical data
- Mains 400V 3 ~ ±10% 50/60 Hz (other voltages on request).
- Ambient temperature from -5 °C to +40 °C.
- Protection IP 55.

Components
- Thermoplastic case. - Door lock master switch.
- Fuses for power line. - Fuses for auxiliary circuit.
- Starting contactors. - Thermal relay.
- Electronic board type MPS 3000 with microprocessor.
- Terminals for pressure trasducer / level probes.
- Connection terminals for thermal protector.
- Connection terminals for the RA 100 - RA 100A type.- Terminals for pressure switch connection.
- Terminals for float switch or flow switch connection against dry-running.
- Terminals for remote signals - Cable glands.

ON REQUEST:
- Volt free contact control panel Q-MSP 13M.
- RA 100 - RA 100A control panel for remote alarm.

CALPEDA ROMANIA - INFINITY PUMPS SRL
Tel: 0268.33.47.47 / 0722.244.944
vanzari@calpeda.ro | www.calpeda.ro

Control panels

QTL/A 3 ST FT Control panel for 3 pumps with three-phase motor, Y/Δ starting

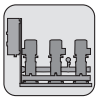

Code	Type	Motor Power kW	400V - 3~ Current A	Dimensions HxBxP mm
14055030000	**QTL/A 3 ST 5,5 FT**	5,5	11 - 15	700x500x200
14055040000	**QTL/A 3 ST 7,5 FT**	7,5	12 - 17	700x500x200
14055050000	**QTL/A 3 ST 11 FT**	9,2 - 11	16 - 24	800x600x250
14055060000	**QTL/A 3 ST 15 FT**	15	23 - 31	800x600x250
14055070000	**QTL/A 3 ST 18,5 FT**	18,5	30 - 39	1000x600x250
14055080000	**QTL/A 3 ST 22 FT**	22	35 - 43	1100x700x250
14055090000	**QTL/A 3 ST 30B FT**	30	42 - 55	1200x800x300
14055100000	**QTL/A 3 ST 30A FT**	30	55 - 65	1200x800x300
14055110000	**QTL/A 3 ST 37 FT**	37	61 - 84	1400x800x400
14055120000	**QTL/A 3 ST 45 FT**	45	80 - 105	1400x800x400

Construction

Control panel for 3 pumps with three-phase motor, Y/Δ starting, for pressure booster sets, with working time-measuring system that stops the pump in case of lack of air cushion in the pressure vessel.
Pump operation cascade mode controlled by an electronic board type MPS 3000 with microprocessor which allows different operation modes: standard, emergency and timed.
Dry-running protection with float switch or level control probes.

Technical data

- Mains 400V ±10% 50/60 Hz (other voltages on request).
- Ambient temperature from -5 °C to +40 °C.
- Protection IP 55.

Components

- Metal case. - Door lock master switch. - Fuses for power line.
- Fuses for auxiliary circuit. - Starting contactors.
- Thermal relay. - Y/Δ timers. - Transformer.
- Electronic board type MPS 3000 with microprocessor.
- Terminals for pressure trasducer / level probes.
- Connection terminals for thermal protector.
- Connection terminals for the RA 100 - RA 100A type.
- Terminals for pumps connection.
- Terminals for pressure switch connection.
- Terminals for float switch or flow switch connection against dry-running.
- Terminals for remote signals - Cable glands.

ON REQUEST:

- Volt free contact control panel Q-MSP 13M.
- RA 100 - RA 100A control panel for remote alarm.
- Voltmeter. - Ammeter.

QTL/A 3 ST FT-RH Electric control panel for 3 **drainage** pumps with three-phase motor, Y/Δ starting

Code	Type	Motor Power kW	400V - 3~ *Current* A	Dimensions HxBxP mm
14055130000	**QTL/A 3 ST 4 FT-RH**	4	7 - 11	700x500x200
14055140000	**QTL/A 3 ST 5,5 FT-RH**	5,5	11 - 15	700x500x200
14055150000	**QTL/A 3 ST 7,5 FT-RH**	7,5	12 - 17	700x500x200
14055160000	**QTL/A 3 ST 11 FT-RH**	9,2 - 11	16 - 24	800x600x250
14055170000	**QTL/A 3 ST 15 FT-RH**	15	23 - 31	800x600x250
14055180000	**QTL/A 3 ST 18,5 FT-RH**	18,5	30 - 39	1000x600x250
14055190000	**QTL/A 3 ST 22 FT-RH**	22	35 - 43	1100x700x250
14055200000	**QTL/A 3 ST 30B FT-RH**	30	42 - 55	1200x800x300
14055210000	**QTL/A 3 ST 30A FT-RH**	30	55 - 65	1200x800x300
14055220000	**QTL/A 3 ST 37 FT-RH**	37	61 - 84	1400x800x400
14055230000	**QTL/A 3 ST 45 FT-RH**	45	80 - 105	1400x800x400
14055240000	**QTL/A 3 ST 55 FT-RH**	55	100 - 125	1600x800x400
14055250000	**QTL/A 3 ST 75 FT-RH**	75	120 - 150	1600x1000x400
14055260000	**QTL/A 3 ST 92 FT-RH**	92	155 - 255	1600x1000x400

Construction

Control panel with protection for 3 submersible drainage pumps with three-phase motor, Y/Δ starting.
Operation managed by the MPS 3000 electronic circuit board that incorporates the following functions:
- changes pumps at every pump start.
- changes working pumps after 30 minutes of uninterrupted operation.
- automatic functioning test of each individual pump every set hours of inactivity (with pumps in the automatic functioning mode).
- Pump control with signals coming from:
  - **4 float switches:** for starting-up and stopping pump, for the alarm (maximum level is optional).
  - **5 float switches:** for starting-up pump, for stopping the pumps and for the alarm (maximum level is optional).

Technical data

- Mains 400V 3 ~ ±10% 50/60 Hz (other voltages on request).
- Ambient temperature from -5 °C to +40 °C. - Protection IP 55.

Components

- Metal case.
- Line selector switch with door-locking device.
- Power line fuses. - Auxiliary circuit fuses.
- Contactors. - Y/Δ timers.
- Electronic board type MPS 3000 with microprocessor.
- Terminals for pressure trasducer / level probes.
- Connection terminals for thermal protector.
- Connection terminals for the RA 100 - RA 100A type.
- Connection terminals for float switches.
- Connection terminals for water seepages probe.
- Cable glands.

ON REQUEST:

- Volt free contact control panel Q-MSP 13M.
- RA 100 - RA 100A control panel for remote alarm .
- Voltmeter. - Ammeter.

CALPEDA ROMANIA - INFINITY PUMPS SRL
Tel: 0268.33.47.47 / 0722.244.944
vanzari@calpeda.ro | www.calpeda.ro

Control panels

QML 1 VFT Control panel for 1 pump with **variable speed** three-phase motor.

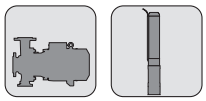

Code	Type	Motor 230V - 3~ **kW**	Max current output max **A**	Dimensions *HxBxP mm*
---	**QML 1 VFT 0,4**	0,37 - 0,45	2,4	500x350x200
	QML 1 VFT 0,75	0,55 - 0,75	4,2	500x350x200
	QML 1 VFT 1,5	1,1 - 1,5	7,5	500x350x200
	QML 1 VFT 2,2	2,2	10	500x350x200

Construction

Single-phase mains supply control panel with frequency converter for 1 pump with three-phase 230V variable speed motor, for constant pressure booster sets.
Arranged for SRL 3 level control application for probes connection against dry-running.
Pump operation controlled by an electronic board type MPS 4000 with microprocessor.

Technical data

- Mains single-phase 230V ±10% 50 Hz (other voltages on request).
- Ambient temperature from -5 °C to +40 °C.
- Protection IP 44.

Components

- Metal case. - Door lock master switch.
- Fuses for power line. - Fuses for auxiliary circuit.
- EMC filter. - Frequency converter. - MPS 4000 electronic card.
- Interface for MPS 4000 electronic board.
- Ventilator for electric panel cooling.
- Terminals board. - Terminals for remote signals
- Pressure transducer - Cable glands.

ON REQUEST:

- SRL 3 level control for probes against dry running
- Volt free contact module MSP 1M, control panel Q-MSP 9M.
- RA 100 control panel for remote alarm.

QTL 1 VFT Control panel for 1 pump with **variable speed** three-phase motor

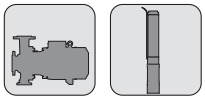

Code	Type	Motor 400V - 3~ **kW**	Max current outpu max **A**	Dimensions *HxBxP mm*
14046510000	**QTL 1 VFT 0,4**	0,4	1,5	500x350x200
14046520000	**QTL 1 VFT 0,75**	0,55 - 0,75	2,3	500x350x200
14046530000	**QTL 1 VFT 1,5**	1,1 - 1,5	4,1	500x350x200
14046540000	**QTL 1 VFT 2,2**	2,2	5,5	500x350x200
14046550000	**QTL 1 VFT 4**	3 - 4	9,5	500x350x200
14046560000	**QTL 1 VFT 5,5**	5,5	14,3	600x400x250
14046570000	**QTL 1 VFT 7,5**	7,5	17	600x400x250
14046580000	**QTL 1 VFT 11**	9,2 - 11	27,7	700x500x250
14046590000	**QTL 1 VFT 15**	15	33	700x500x250
14046600000	**QTL 1 VFT 18,5**	18,5	46,3	800x600x250
14046610000	**QTL 1 VFT 22**	22	61,5	800x600x250
14046620000	**QTL 1 VFT 30**	30	74,5	900x600x250
14046630000	**QTL 1 VFT 37**	37	88	1100x700x300
14046640000	**QTL 1 VFT 45**	45	106	1200x800x300
14046650000	**QTL 1 VFT 55**	55	145	1200x800x300
14046660000	**QTL 1 VFT 75**	75	173	1200x800x300

Construction

Control panel with frequency converter for 1 pump with three-phase variable speed motor, for constant pressure booster sets.
Arranged for SRL 3 level control application for probes connection against dry-running.
Pump operation controlled by an electronic board type MPS 4000 with microprocessor.

Technical data

- Mains 400V ±10% 50 Hz (other voltages on request).
- Ambient temperature from -5 °C to +40 °C.
- Protection IP 44.

Components

- Metal case. - Door lock master switch.
- Fuses for power line. - Fuses for auxiliary circuit.
- EMC filter. - Frequency converter. - MPS 4000 electronic board.
- Interface for MPS 4000 electronic board.
- Ventilator for electric panel cooling.
- Terminals board. - Terminals for remote signals
- Pressure transducer - Cable glands.

ON REQUEST:

- SRL 3 level control for probes against dry running
- Volt free contact module MSP 1M, control panel Q-MSP 9M.
- RA 100 control panel for remote alarm.

CALPEDA ROMANIA - INFINITY PUMPS SRL
Tel: 0268.33.47.47 / 0722.244.944
vanzari@calpeda.ro | www.calpeda.ro

Control panels

QML 2 VFT Control panel for 2 pumps with **variable speed** three-phase motor

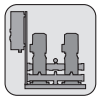

Code	Type	Motor 230V - 3~ **kW**	Max current output max **A**	Dimensions *HxBxP mm*
---	**QML 2 VFT 0,45**	0,37 - 0,45	2,4x2	600x400x200
	QML 2 VFT 0,75	0,55 - 0,75	4,2x2	600x400x200
	QML 2 VFT 1,5	1,1 - 1,5	7,5x2	600x400x200
	QML 2 VFT 2,2	2,2	10x2	600x400x200

Construction

Single-phase mains supply control panel with frequency converter for 2 pumps with three-phase 230V variable speed motor, for constant pressure booster sets.
Arranged for SRL 3 level control application for probes connection against dry-running.
Pump operation controlled by an electronic board type MPS 4000 with microprocessor alternating the starting order at each start.

Components

- Metal case. - Door lock master switch.
- Fuses for power line. - Fuses for auxiliary circuit. - EMC filter.
- Frequency converter (1 for each pump).
- MPS 4000 electronic board.
- Interface for MPS 4000 electronic board.
- Ventilator for electric panel cooling.
- Terminals board. - Terminals for remote signals
- Pressure transducer - Cable glands.

Technical data

- Mains single-phase 230V ±10% 50 Hz (other voltages on request).
- Ambient temperature from -5 °C to +40 °C.
- Protection IP 44.

ON REQUEST:

- SRL 3 level control for probes against dry running
- Volt free contact module MSP 1M, control panel Q-MSP 9M..
- RA 100 control panel for remote alarm.

QTL 2 VFT Control panel for 2 pumps with **variable speed** three-phase motor

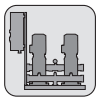

Code	Type	Motor 400V - 3~ **kW**	Max current output max **A**	Dimensions *HxBxP mm*
14046670000	**QTL 2 VFT 0,45**	0,37 - 0,45	1,5x2	600x400x250
14046680000	**QTL 2 VFT 0,75**	0,55 - 0,75	2,3x2	600x400x250
14046690000	**QTL 2 VFT 1,5**	1,1 - 1,5	4,1x2	600x400x250
14046700000	**QTL 2 VFT 2,2**	2,2	5,5x2	600x400x250
14046710000	**QTL 2 VFT 4**	3 - 4	9,5x2	600x400x250
14046720000	**QTL 2 VFT 5,5**	5,5	14,3x2	700x500x250
14046730000	**QTL 2 VFT 7,5**	7,5	17x2	700x500x250
14046740000	**QTL 2 VFT 11**	9,2 - 11	27,7x2	900x600x250
14046750000	**QTL 2 VFT 15**	15	33x2	900x600x250
14046760000	**QTL 2 VFT 18,5**	18,5	46,3x2	1200x800x300
14046770000	**QTL 2 VFT 22**	22	61,5x2	1200x800x300
14046780000	**QTL 2 VFT 30**	30	74,5x2	1200x800x300
14046790000	**QTL 2 VFT 37**	37	88x2	1600x1000x400
14046800000	**QTL 2 VFT 45**	45	106x2	2100x1400x500
14046810000	**QTL 2 VFT 55**	55	145x2	2100x1400x500
14046820000	**QTL 2 VFT 75**	75	173x2	2100x1400x500

Construction

Control panel with frequency converter for 2 pump with three-phase variable speed motor, for constant pressure booster sets.
Arranged for SRL 3 level control application for probes connection against dry-running.
Pump operation controlled by an electronic board type MPS 4000 with microprocessor.

Components

- Metal case. - Door lock master switch.
- Fuses for power line. - Fuses for auxiliary circuit.
- EMC filter. - Frequency converter.
- MPS 4000 electronic board.
- Interface for MPS 4000 electronic board.
- Ventilator for electric panel cooling. - Pressure transducer
- Terminals board. - Terminals for remote signals - Cable glands.

Technical data

- Mains 400V ±10% 50 Hz (other voltages on request).
- Ambient temperature from -5 °C to +40 °C.
- Protection IP 44.

ON REQUEST:

- SRL 3 level control for probes against dry running
- Volt free contact module MSP 1M, control panel Q-MSP 9M.
- RA 100 control panel for remote alarm.

CALPEDA ROMANIA - INFINITY PUMPS SRL
Tel: 0268.33.47.47 / 0722.244.944
vanzari@calpeda.ro | www.calpeda.ro

Control panels

QML 1.1 VFT Control panel for 1 **variable speed** pump and 1 fixed speed pump

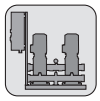

Code	Type	Motor 230V - 3~ kW	Max current output max **A**	Dimensions *HxBxP mm*
---	**QML 1.1 VFT 0,45 - D 0,45**	0,37 - 0,45	2,4	600x400x250
	QML 1.1 VFT 0,75 - D 0,75	0,55 - 0,75	4,2	600x400x250
	QML 1.1 VFT 1,5 - D 1,5	1,1 - 1,5	7,5	600x400x250
	QML 1.1 VFT 2,2 - D 2,2	2,2	10	600x400x250

Construction

Single-phase mains supply control panel with frequency converter for 2 pumps, one with three-phase 230V variable speed motor and one with fixed speed single-phase motor, for constant pressure booster sets.
Arranged for SRL 3 level control application for probes connection against dry-running.
Pump operation controlled by an electronic board type MPS 4000 with microprocessor.

Components

- Metal case. - Door lock master switch.
- Fuses for power line. - Fuses for auxiliary circuit.
- EMC filter. - Frequency converter.
- Starting contactors of the second pump. - Transformer.
- MPS 4000 electronic board.
- Interface for MPS 4000 electronic board.
- Ventilator for electric panel cooling. - Pressure transducer
- Terminals board. - Terminals for remote signals - Cable glands.

Technical data

- Mains single-phase 230V ±10% 50 Hz (other voltages on request).
- Ambient temperature from -5 °C to +40 °C.
- Protection IP 44.

ON REQUEST:

- SRL 3 level control for probes against dry running
- Volt free contact module MSP 1M, control panel Q-MSP 9M.
- RA 100 control panel for remote alarm.

QTL 1.1 VFT Control panel for 1 **variable speed** pump and 1 fixed speed pump

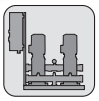

Code	Type	Motor 400V - 3~ kW	Max current output (Variable) max **A**	(Fixed) max **A**	Dimensions *HxBxP mm*
---	**QTL 1.1 VFT 0,45 - D 0,45**	0,37 - 0,45	1,5	1 - 1,6	600x400x250
14047460000	**QTL 1.1 VFT 0,75 - D 0,75**	0,55 - 0,75	2,3	1,6 - 2,5	600x400x250
14047230000	**QTL 1.1 VFT 1,5 - D 1,5**	1,1 - 1,5	4,1	2,5 - 4	600x400x250
14047130000	**QTL 1.1 VFT 2,2 - D 2,2**	2,2	5,5	4 - 6,5	600x400x250
	QTL 1.1 VFT 4 - D 3	3	9,5	4 - 6,5	600x400x250
14047160000	**QTL 1.1 VFT 4 - D 4**	4	9,5	6,3 - 10	600x400x250
14047120000	**QTL 1.1 VFT 5,5 - D 5,5**	5,5	14,3	9 - 14	700x500x250
14047030000	**QTL 1.1 VFT 7,5 - ST 7,5**	7,5	17	11 - 17	800x600x250
14048390000	**QTL 1.1 VFT 11 - ST 11**	9,2 - 11	27,7	16 - 24	800x600x250
14048210000	**QTL 1.1 VFT 15 - ST 15**	15	33	22 - 31	800x600x250
	QTL 1.1 VFT 18,5 - ST 18,5	18,5	46,3	30 - 39	900x600x250
14055630000	**QTL 1.1 VFT 22 - ST 22**	22	61,5	35 - 43	900x600x250
	QTL 1.1 VFT 30 - ST 30B	30	74,5	42 - 55	1000x800x250
	QTL 1.1 VFT 30 - ST 30A	30	74,5	55 - 65	1000x800x250
	QTL 1.1 VFT 37 - ST 37	37	88	61 - 84	1200x800x300
	QTL 1.1 VFT 45 - ST 45	45	106	80 - 105	1200x800x300
	QTL 1.1 VFT 55 - ST 55	55	145	100 - 125	1200x800x300
	QTL 1.1 VFT 75 - ST 75	75	173	120 - 160	1200x800x300

Construction

Control panel with frequency converter for 2 pumps with three-phase motor, one with variable speed and one with fixed speed motor, for constant pressure booster sets.
Arranged for SRL 3 level control application for probes connection against dry-running.
Pump operation controlled by an electronic board type MPS 4000 with microprocessor.

Components

- Metal case. - Door lock master switch. - Fuses for power line.
- Fuses for auxiliary circuit. - EMC filter. - Frequency converter.
- Starting contactors of the second pump. - Timer (Y/Δ) from 7,5 kW.
- Transformer. - MPS 4000 electronic card.
- Interface for MPS 4000 electronic board.
- Ventilator for electric panel cooling. - Pressure transducer
- Terminals board. - Terminals for remote signals - Cable glands.

Technical data

- Mains 400V ±10% 50 Hz (other voltages on request).
- Ambient temperature from -5 °C to +40 °C.
- Protection IP 44.

ON REQUEST:

- SRL 3 level control for probes against dry running
- Volt free contact module MSP 1M, control panel Q-MSP 9M.
- RA 100 control panel for remote alarm.

CALPEDA ROMANIA - INFINITY PUMPS SRL
Tel: 0268.33.47.47 / 0722.244.944
vanzari@calpeda.ro | www.calpeda.ro

Control panels

QML 3 VFT Control panel for 3 **variable speeds** pump with three-phase motor

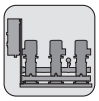

Code	Type	Motor 230V - 3~ **kW**	Max current output max **A**	Dimensions *HxBxP mm*
---	**QML 3 VFT 0,45**	0,37 - 0,45	2,4x3	700x500x200
	QML 3 VFT 0,75	0,55 - 0,75	4,2x3	700x500x200
	QML 3 VFT 1,5	1,1 - 1,5	7,5x3	700x500x200
	QML 3 VFT 2,2	2,2	10x3	800x600x250

Construction

Single-phase mains supply control panel with frequency converter for 3 pumps with three-phase 230V variable speed motor, for constant pressure booster sets.
Arranged for SRL 3 level control application for probes connection against dry-running.
Pump operation controlled by an electronic board type MPS 4000 with microprocessor alternating the starting order at each start.

Components

- Metal case. - Door lock master switch.
- Fuses for power line. - Fuses for auxiliary circuit.
- EMC filter. - Frequency converter (1 for each pump).
- MPS 4000 electronic card.
- Interface for MPS 4000 electronic board.
- Ventilator for electric panel cooling.
- Terminals board. - Terminals for remote signals
- Pressure transducer - Cable glands.

Technical data

- Mains single-phase 230V ±10% 50 Hz (other voltages on request).
- Ambient temperature from -5 °C to +40 °C.
- Protection IP 44.

ON REQUEST:

- SRL 3 level control for probes against dry running
- Volt free contact module MSP 1M, control panel Q-MSP 13M.
- RA 100 control panel for remote alarm.

QTL 3 VFT Control panel for 3 pumps with **variable speed** three-phase motor

Code	Type	Motor 400V - 3~ **kW**	Max current output max **A**	Dimensions *HxBxP mm*
---	**QTL 3 VFT 0,45**	0,37 - 0,45	1,5x3	700x500x200
14048840000	**QTL 3 VFT 0,75**	0,55 - 0,75	2,3x3	700x500x200
14046930000	**QTL 3 VFT 1,5**	1,1 - 1,5	4,1x3	700x500x200
14047140000	**QTL 3 VFT 2,2**	2,2	5,5x3	800x600x250
14047040000	**QTL 3 VFT 4**	3 - 4	9,5x3	800x600x250
14048250000	**QTL 3 VFT 5,5**	5,5	14,3x3	800x600x250
14049760000	**QTL 3 VFT 7,5**	7,5	17x3	800x600x250
14047280000	**QTL 3 VFT 11**	9,2 - 11	27,7x3	1700x800x300
14050350000	**QTL 3 VFT 15**	15	33x3	1700x800x300
	QTL 3 VFT 18,5	18,5	46,3x3	1700x1000x400
14047150000	**QTL 3 VFT 22**	22	61,5x3	1700x1000x400
14047270000	**QTL 3 VFT 30**	30	74,5x3	1700x1000x400
14052180000	**QTL 3 VFT 37**	37	88x3	1200x600x300n3
	QTL 3 VFT 45	45	106x3	1400x800x400n3
	QTL 3 VFT 55	55	145x3	A richiesta
	QTL 3 VFT 75	75	173x3	A richiesta

Construction

Control panel with frequency converter for 3 pumps with variable speed three-phase motor, for constant pressure booster sets.
Arranged for SRL 3 level control application for probes connection against dry-running.
Pump operation controlled by an electronic board type MPS 4000 with microprocessor alternating the starting order at each start.

Components

- Metal case. - Door lock master switch.
- Fuses for power line. - Fuses for auxiliary circuit.
- EMC filter. - Frequency converter (1 for each pump).
- MPS 4000 electronic card.
- Interface for MPS 4000 electronic board.
- Ventilator for electric panel cooling. - Pressure transducer
- Terminals board. - Terminals for remote signals - Cable glands.

Technical data

- Mains 400V ±10% 50 Hz (other voltages on request).
- Ambient temperature from -5 °C to +40 °C.
- Protection IP 44.

ON REQUEST:

- SRL 3 level control for probes against dry running
- Volt free contact module MSP 1M, control panel Q-MSP 13M.
- RA 100 control panel for remote alarm.

CALPEDA ROMANIA - INFINITY PUMPS SRL
Tel: 0268.33.47.47 / 0722.244.944
vanzari@calpeda.ro | www.calpeda.ro

Control panels

QTL 1.2 VFT Control panel for 1 **variable speed** pump and 2 fixed speed pumps

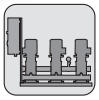

Code	Type	Motor 400V - 3~ kW	Max current output (Variable) max A	(Fixed) max A	Dimensions HxBxP mm
	QTL 1.2 VFT 0,45 - D 0,45	0,37 - 0,45	1,5	1 - 1,6	600x400x200
	QTL 1.2 VFT 0,75 - D 0,75	0,55 - 0,75	2,3	1,6 - 2,5	600x400x200
14047640000	**QTL 1.2 VFT 1,5 - D 1,5**	1,1 - 1,5	4,1	2,5 - 4	600x400x200
14048510000	**QTL 1.2 VFT 2,2 - D 2,2**	2,2	5,5	4 - 6,5	600x400x200
	QTL 1.2 VFT 4 - D 3	3	9,5	4 - 6,5	600x400x200
14048260000	**QTL 1.2 VFT 4 - D 4**	4	9,5	6,3 - 10	600x400x200
14047200000	**QTL 1.2 VFT 5,5 - D 5,5**	5,5	14,3	9 - 14	700x500x200
14051640000	**QTL 1.2 VFT 7,5 - ST 7,5**	7,5	17	11 - 17	800x600x250
14047300000	**QTL 1.2 VFT 11 - ST 11**	9,2 - 11	27,7	16 - 24	800x600x250
	QTL 1.2 VFT 15 - ST 15	15	33	22 - 31	800x600x250
	QTL 1.2 VFT 18,5 - ST18,5	18,5	46,3	30 - 39	1200x800x250
14048660000	**QTL 1.2 VFT 22 - ST 22**	22	61,5	35 - 43	1000x800x250
	QTL 1.2 VFT 30 - ST 30B	30	74,5	42 - 55	1000x800x250
	QTL 1.2 VFT 30 - ST 30A	30	74,5	55 - 65	1000x800x250
	QTL 1.2 VFT 37 - ST 37	37	88	61 - 84	1200x800x300
	QTL 1.2 VFT 45 - ST 45	45	106	80 - 105	
	QTL 1.2 VFT 55 - ST 55	55	145	100 - 125	
	QTL 1.2 VFT 75 - ST 75	75	173	120 - 160	

Construction

Control panel with frequency converter for 3 pumps with three-phase motor: one with variable speed motor (with frequency converter) and 2 with fixed speed motor, for constant pressure booster sets.
Arranged for SRL 3 level control application for probes connection against dry-running.
Pump operation controlled by an electronic board type MPS 4000 with microprocessor alternating the starting order at each start.

Components

- Metal case. - Door lock master switch. - Fuses for power line.
- Fuses for auxiliary circuit. - EMC filter. - Frequency converter.
- Starting contactors of the second and third pump.
- Timer (Y/Δ) from 7,5 kW. - Transformer.
- MPS 4000 electronic board.
- Interface for MPS 4000 electronic board.
- Ventilator for electric panel cooling. - Pressure transducer
- Terminals board. - Terminals for remote signals - Cable glands.

Technical data

- Mains 400V ±10% 50 Hz (other voltages on request).
- Ambient temperature from -5 °C to +40 °C.
- Protection IP 44.

ON REQUEST:

- SRL 3 level control for probes against dry running
- Volt free contact module MSP 1M, control panel Q-MSP 13M.
- RA 100 control panel for remote alarm.

QTL 4 VFT Control panel for 4 pumps with **variable speed** three-phase motor

Code	Type	Motor 400V - 3~ kW	Max current output max A	Dimensions HxBxP mm
	QTL 4 VFT 0,45	0,37- 0,45	1,5x4	800x600x250
	QTL 4 VFT 0,75	0,55 - 0,75	2,3x4	800x600x250
	QTL 4 VFT 1,5	1,1 - 1,5	4,1x4	800x600x250
14049710000	**QTL 4 VFT 2,2**	2,2	5,5x4	900x600x250
14047840000	**QTL 4 VFT 4**	3 - 4	9,5x4	900x600x250
	QTL 4 VFT 5,5	5,5	14,3x4	1200x800x300
	QTL 4 VFT 7,5	7,5	17x4	1200x800x300
	QTL 4 VFT 11	9,2 - 11	27,7x4	1400x800x400
	QTL 4 VFT 15	15	33x4	1400x800x400
	QTL 4 VFT 18,5	18,5	46,3x4	2000x1800x400
14053940000	**QTL 4 VFT 22**	22	61,5x4	2000x1800x400
	QTL 4 VFT 30	30	74,5x4	2000x1800x400
	QTL 4 VFT 37	37	88x4	2000x1800x400
	QTL 4 VFT 45	45	106x4	2000x1800x400
	QTL 4 VFT 55	55	145x4	2000x1800x400
	QTL 4 VFT 75	75	173x4	2000x1800x400

Construction

Control panel with frequency converter for 4 pumps with variable speed three-phase motor, for constant pressure booster sets.
Arranged for SRL 3 level control application for probes connection against dry-running.
Pump operation controlled by an electronic board type MPS 4000 with microprocessor alternating the starting order at each start.

Components

- Metal case. - Door lock master switch.
- Fuses for power line. - Fuses for auxiliary circuit.
- EMC filter. - Frequency converter (1 for each pump).
- MPS 4000 electronic board.
- Interface for MPS 4000 electronic board.
- Ventilator for electric panel cooling. - Pressure transducer
- Terminals board. - Terminals for remote signals - Cable glands.

Technical data

- Mains 400V ±10% 50 Hz (other voltages on request).
- Ambient temperature from -5 °C to +40 °C.
- Protection IP 44.

ON REQUEST:

- SRL 3 level control for probes against dry running
- Volt free contact module MSP 1M, control panel Q-MSP 13M.
- RA 100 control panel for remote alarm.

CALPEDA ROMANIA - INFINITY PUMPS SRL
Tel: 0268.33.47.47 / 0722.244.944
vanzari@calpeda.ro | www.calpeda.ro

Control panels

QTL 1.3 VFT Control panel for 1 **variable speed** pump and 3 fixed speed pumps

Code	Type	Motor 400V - 3~ **kW**	Max current output (Variable) max **A**	(Fixed) max **A**	Dimensions *HxBxP mm*
---	**QTL 1.3 VFT 0,45 - D 0,45**	0,37 - 0,45	1,5	1 - 1,6	700x500x250
	QTL 1.3 VFT 0,75 - D 0,75	0,55 - 0,75	2,3	1,6 - 2,5	700x500x250
	QTL 1.3 VFT 1,5 - D 1,5	1,1 - 1,5	4,1	2,5 - 4	700x500x250
	QTL 1.3 VFT 2,2 - D 2,2	2,2	5,5	4 - 6,5	700x500x250
	QTL 1.3 VFT 4 - D 3	3	9,5	4 - 6,5	700x500x250
	QTL 1.3 VFT 4 - D 4	4	9,5	6,3 - 10	700x500x250
	QTL 1.3 VFT 5,5 - D 5,5	5,5	14,3	9 - 14	700x500x250
	QTL 1.3 VFT 7,5 - ST 7,5	7,5	17	11 - 17	1100x700x250
14046890000	**QTL 1.3 VFT 11 - ST 11**	9,2 - 11	27,7	16 - 24	1100x700x250
	QTL 1.3 VFT 15 - ST 15	15	33	22 - 31	1100x700x250
	QTL 1.3 VFT 18,5 - ST 18,5	18,5	46,3	30 - 39	1200x800x300
	QTL 1.3 VFT 22 - ST 22	22	61,5	35 - 43	1200x800x300
	QTL 1.3 VFT 30 - ST 30B	30	74,5	42 - 55	1200x800x300
	QTL 1.3 VFT 30 - ST 30A	30	74,5	55 - 65	1200x800x300
	QTL 1.3 VFT 37 - ST 37	37	88	61 - 84	1600x800x400
	QTL 1.3 VFT 45 - ST 45	45	106	80 - 105	1700x800x400
	QTL 1.3 VFT 55 - ST 55	55	145	100 - 125	
	QTL 1.3 VFT 75 - ST 75	75	173	120 - 160	

Construction

Control panel with frequency converter for 4 pumps with three-phase motor: one with variable speed motor (with frequency converter) and 3 with fixed speed motor, for constant pressure booster sets.
Arranged for SRL 3 level control application for probes connection against dry-running.
Pump operation controlled by an electronic board type MPS 4000 with microprocessor alternating the starting order at each start.

Technical data

- Mains 400V ±10% 50 Hz (other voltages on request).
- Ambient temperature from -5 °C to +40 °C.
- Protection IP 44.

Components

- Metal case. - Door lock master switch. - Fuses for power line.
- Fuses for auxiliary circuit. - EMC filter. - Frequency converter.
- Starting contactors of the second, third and fourth pump.
- Timer (Y/Δ) from 7,5 kW. - Transformer. - MPS 4000 electronic board.
- Interface for MPS 4000 electronic board.
- Ventilator for electric panel cooling. - Pressure transducer
- Terminals board. - Terminals for remote signals - Cable glands.

ON REQUEST:

- SRL 3 level control for probes against dry running
- Volt free contact module MSP 1M, control panel Q-MSP 13M.
- RA 100 control panel for remote alarm.

CALPEDA ROMANIA - INFINITY PUMPS SRL
Tel: 0268.33.47.47 / 0722.244.944
vanzari@calpeda.ro | www.calpeda.ro

SMAT

ELECTRONIC PROTECTION DEVICE FOR PUMP

Construction

Electronic device for pumps protection, the device stops the pump in case of dry running and motor overcurrent.

Electrical connection
- To pump motor cable (Schuko plug built-in)
- To electric line socket (Schuko plug built-in)

Applications

For protection of the pump:

The device protect the pump: - against dry running;
- against overcurrent.

Operating conditions

Maximum ambient temperature max 55 °C.
Single-phase mains voltage: 230 V ±10%.
Frequency: 50 - 60 Hz.
Protection IP 65.
Pump motor current Minimum 3 A - Maximum 8 A.

Control Panel

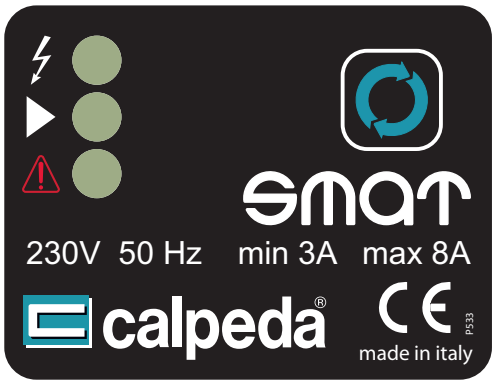

Operation

Green Led on = Device energised

Yellow Led on = Pump running

Blinking red Led = Water shortage
Red Led on = Power surge

RESTART button = - Acquisition motor data
- Reset after fault

CALPEDA ROMANIA - INFINITY PUMPS SRL
Tel: 0268.33.47.47 / 0722.244.944
vanzari@calpeda.ro | www.calpeda.ro

SMAT

ELECTRONIC PROTECTION DEVICE FOR PUMP

Dimensions and weights

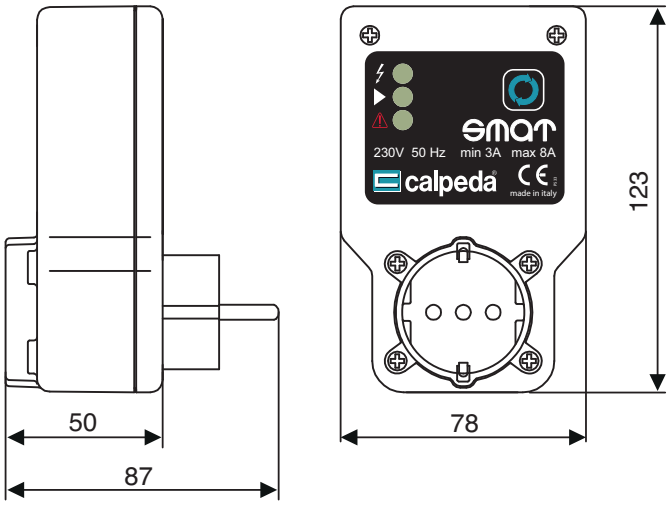

Example of installation

In order to operate, the electrical power supply of the pump must be connected to the mains.
For this reason the power supply plug of the pump must be inserted in the socket of the device which is in turn connected to the power point (see Figure).
In case of a water shortage on suction, the device will stop the pump and protect it against dry running.
This malfunctioning is indicated with the red "Failure" Led lit up.
In case of the current absorption exceeding 8 amperes, the device will stop the pump motor and protect it against over-current.
This malfunctioning is indicated with the red "Failure" Led lit up.
To restore normal operation to the device and the system simply press the red "Restart" button.

In case of a blackout, it will automatically rearm again several seconds after the electricity returns.

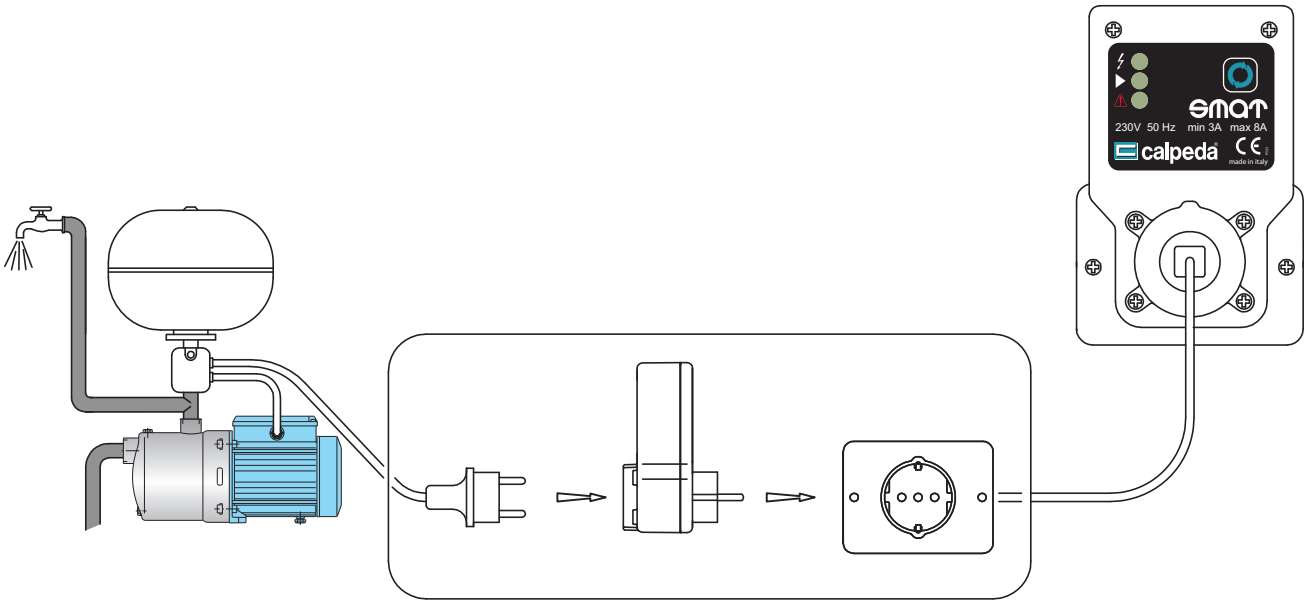

CALPEDA ROMANIA - INFINITY PUMPS SRL
Tel: 0268.33.47.47 / 0722.244.944
vanzari@calpeda.ro | www.calpeda.ro

PMAT

PRESSURE SWITCHES FOR WATER SYSTEM APPLICATIONS

Construction

- Pressure switches for use with water in autoclave systems
- The switch ensures automatically the starting and stopping of the electric pump according to the set pressure values
- Electric contacts: normally closed and made of brass alloy with Ag-Ni surfacing
- Terminals with M4 screws and 8x8 mm pressure dice
- NBR rubber membrane with textile insert (food grade for PMAT 5M-10, PMAT 5M/T-16, PMAT 5.5M/T-16)
- ¼"F hydraulic connection made of galvanized steel
- Standard protection degree IP 44
- Liquid temperature up to 55 °C
- Max ambient temperature: 55°C
- Tear resistant cable clamps

Adjustment key included

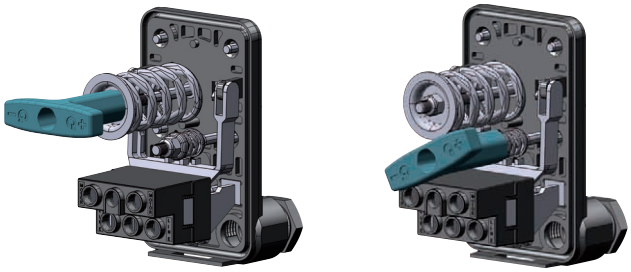

Technical data

2-pins	max A	Pressure range bar	Differential min bar	Differential max bar	Factory setting bar
PMAT 5M-10	10	1 - 5	0,6	2,3	1,4 - 2,8

Maximum rated voltage 250V

2-pins	max A	Pressure range bar	Differential min bar	Differential max bar	Factory setting bar
PMAT 5M/T-16	16	1 - 5	0,6	2,3	1,4 - 2,8
PMAT 5,5M/T-16	16	1,5 - 5,5	0,8	2,2	1,8 - 3
PMAT 12M/T-16	16	3 - 12	1,5	5	5 - 7

Maximum rated voltage 500V

Dimensions

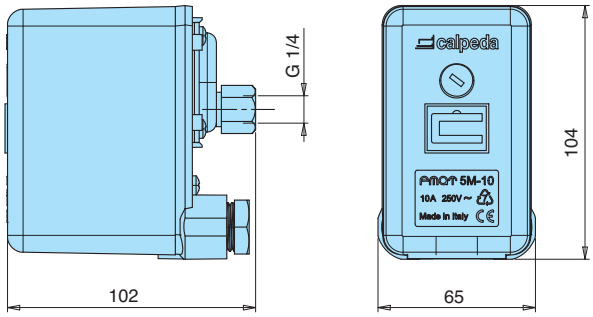

Connection diagram

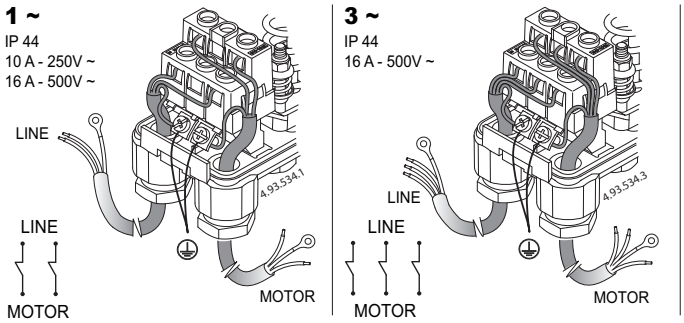

Diagram seeting

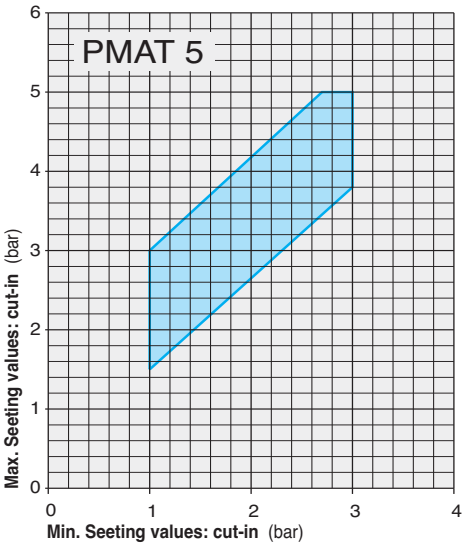

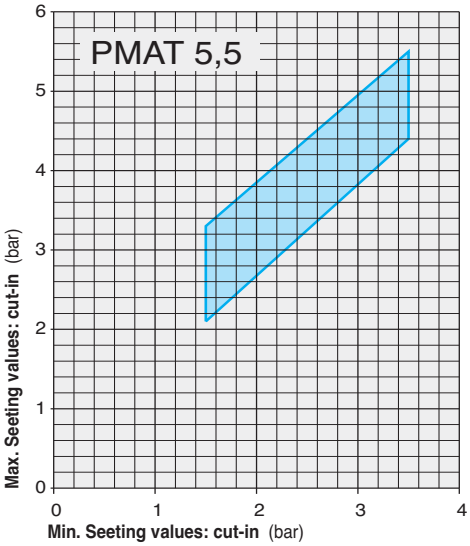

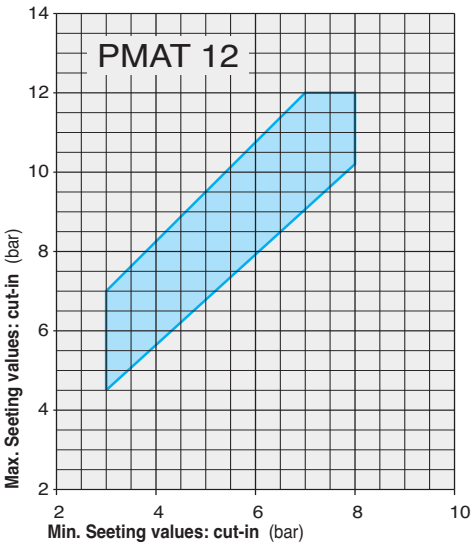

CALPEDA ROMANIA - INFINITY PUMPS SRL
Tel: 0268.33.47.47 / 0722.244.944
vanzari@calpeda.ro | www.calpeda.ro

ARIAMAT

AUTOMATIC AIR FEEDER

ARIAMAT

type
AR 300E
AR 1000E
AR 2000E

Complete with connections and 1 m polyethylene pipe

Materials

Component	Material
Upper elbow	Brass
Air valve	Brass
Feeder body	Polycarbonate
Ball valve	Rubber
Conical fittings	Polyethylene
Pipe	Polyethylene

Construction

The automatic air feeder ARIAMAT controls the air cushion in the pressure vessel by replacing the air dissolved in the water at every pump start. This device limits the number of pump starts and stops, allows a better use of the water reserve and improves the overall performance of the automatic pressure system.

Operation

ARIAMAT operation is explained in pictures 1-2-3-4.
At the end of every cycle, ARIAMAT AR 300E, AR 1000E and AR 2000E let in the vessel 300, 1000 and 2000 cm^3 of air respectively.
For a good operation of ARIAMAT it is necessary to have enough suction pressure in the pipe whilst the pumps are running.
If the pumps work under positive suction head and water falls to the suction inlet, there will not be enough suction pressure in the suction pipe to allow a correct operation of ARIAMAT; in this case, it is necessary to create an artificial loss in the suction pipe, by closing gradually the gate valve when the pump is running until the water level in the ARIAMAT starts dropping.
When a sufficient suction pressure to grant a safe ARIAMAT operation cannot be achieved, it is recommended to feed the vessel with a compressed air system and level probes.

Description of the supply

The ARIAMAT is normally fitted on our automatic water systems.
The supply of ARIAMAT, as a spare part to be installed by the customer, includes:

n° 1 ARIAMAT assembled with upper elbow and air valve;
m 1 Polyethylene tube with ring nut and fitting for connection to the pump suction side.

Pressure in m	Pressure vessel capacity in litres											
	100	200	300	400	500	750	1000	1500	2000	3000	4000	5000
14/28	AR 300E						AR 1000E					AR 2000E
20/30	AR 300E					AR 1000E						AR 2000E
30/40	AR 300E			AR 1000E							AR 2000E	
35/55	AR 300E			AR 1000E						AR 2000E		
55/70	AR 300E		AR 1000E							AR 2000E		
75/95	AR 300E	AR 1000E				The use of an air compressor is recommended.						

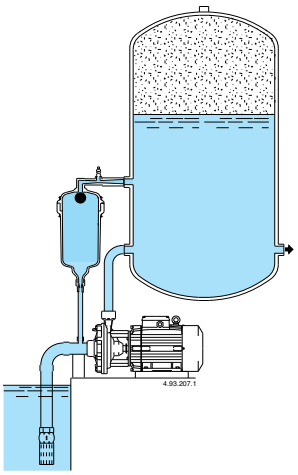

1) When the pump is stopped, ARIAMAT is full of water.

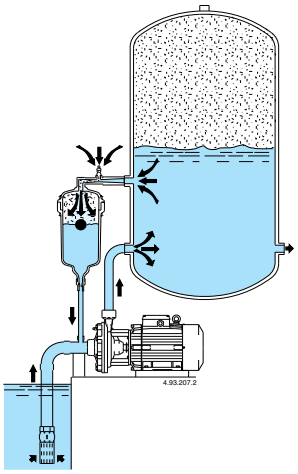

2) When starting, the pumps creates a suction pressure which also takes the water from ARIAMAT, allowing some more water to come from the vessel. The water through the ARIAMAT venturi sucks air from the upper valve.

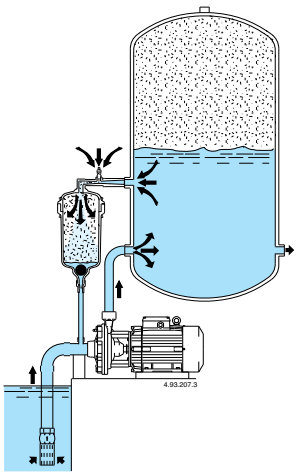

3) The water level in the ARIAMAT drops until the ball valve moves to the bottom of the ARIAMAT closing the hole of the pipe connected to the pump. ARIAMAT is now full of water.

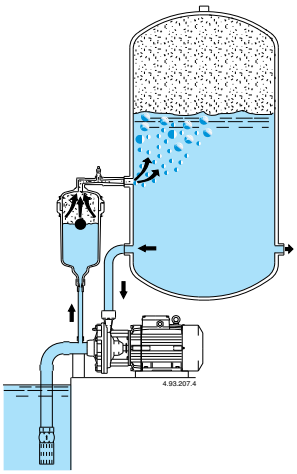

4) When stopping, there is a back-flow of water from the vessel through the pump, to the ARIAMAT. Air is pushed inside the vessel.

CALPEDA ROMANIA - INFINITY PUMPS SRL
Tel: 0268.33.47.47 / 0722.244.944
vanzari@calpeda.ro | www.calpeda.ro

ACCESSORIES

VALVES

check valve

VNR 1
VNR 1 1/4
VNR 1 1/2
VNR 2

foot valve

VDF 1
VDF 1 1/4
VDF 1 1/2
VDF 2

PRESSURE GAUGES

axial connection type

MA 0-6
MA 0-6 ABS

radial connection type

MR 0-10
MR 0-12
MR 0-16

CONNECTOR

type	connection
RA5 H 92	G 1
RA5 H 105	G 1

LEVEL PROBES

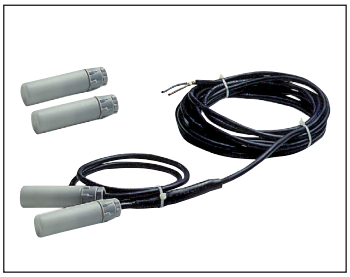

type

SL	2 electrodes
SLA	Assembled level probes
	Cable 2x0,75 mm²
	(cable length on request)

example: **SLA 30**
Assembled level probes
30 m cable length

SPHERICAL VESSEL

type	connect.	capacity
SS 24	G 1	24 l

BUTYL rubber diaphragm.

CYLINDRICAL VESSEL

vessel with base and feet

type	connect.	capacity
SC 20 BP	G 1	20 l

BUTYL rubber diaphragm.

INOX CYLINDRICAL VESSEL

vertical cylindrical vessel

type	connect.	capacity
SCX 20	G 1	20 l

BUTYL rubber diaphragm.

INOX CYLINDRICAL VESSEL

vessel with base and feet

type	connect.	capacity
SCX 20 BP	G 1	20 l

BUTYL rubber diaphragm.

CALPEDA ROMANIA - INFINITY PUMPS SRL
Tel: 0268.33.47.47 / 0722.244.944
vanzari@calpeda.ro | www.calpeda.ro

ACCESSORIES

CE 97/23 PED APPROVED PRESSURE VESSELS
(Air tanks)

Hot galvanized vessels

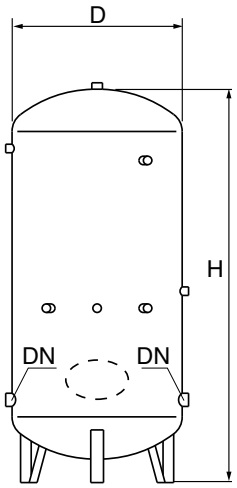

TYPE	Dimensions D x H mm	DN	weigth kg
100- 5	400 x 1020	G 1	32
200- 5	450 x 1440	G 1	48
300- 8	550 x 1500	G 1 1/2	65
500- 8	650 x 1820	G 2	105
500- 12	600 x 2000	G 2	120
800- 8	800 x 1900	G 2	145
1000- 8	800 x 2150	G 2 1/2	160
1000- 12 ▲	800 x 2300	G 2 1/2	203
1500- 5	950 x 2500	G 2	190
1500- 8 ▲	950 x 2500	G 2	255
2000- 8 ▲	1100 x 2570	G 2 1/2	330
2000- 12 ▲	1000 x 2780	G 2 1/2	387
3000- 8 ▲	1250 x 2930	G 3	470
3000- 12 ▲	1200 x 2930	G 3	596
4000- 8 ▲	1450 x 3090	G 3	620
4000- 12 ▲	1450 x 3090	G 3	880
5000- 8 ▲	1450 x 3590	G 4	715
5000- 12 ▲	1450 x 3590	G 4	1020

The vessels are suitable for water up to 50 °C
They are all approved at manufacturer's premises and are supplied complete with safety valve, testedvpressure gauge and fittings.

CE 97/23 PED APPROVED MEMBRANE VESSELS
(Membrane vessels)

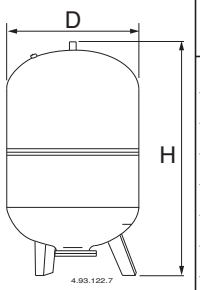

TYPE	Pressure bar	Dimensions D x H mm	DN	weight kg
SM 60 V	10	382 x 845	G 1	-
SM 80 V	10	450 x 850	G 1	-
SM 100 V	10	450 x 950	G 1	-
SM 200 V	10	550 x 1255	G 1 1/2	-
SM 300 V	10	630 x 1405	G 1 1/2	-
SM 500 V	10	780 x 1550	G 1 1/2	-
SM 750 V	10	780 x 1940	G 1 1/2	-
SM 1000 V	10	980 x 1970	G 2	-

EPDM diaphragm
Temperature -10 ÷ +100 °C
With safety valve and pressure gauge 0÷16 bar

CALPEDA ROMANIA - INFINITY PUMPS SRL
Tel: 0268.33.47.47 / 0722.244.944
vanzari@calpeda.ro | www.calpeda.ro

ACCESSORIES

FLOAT SWITCH

tipo
INTGALL
(cable 2,5 m)

FLEXIBLE HOSE

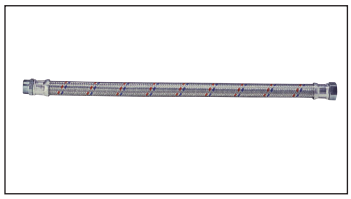

type	d x length
FP 1-630	G 1 x 630
FP 1-680	G 1 x 680

SYSTEM FOR AIR INTAKE

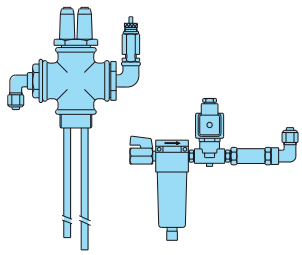

Kit of level probes with solenoid valve

SYSTEM FOR AIR INTAKE

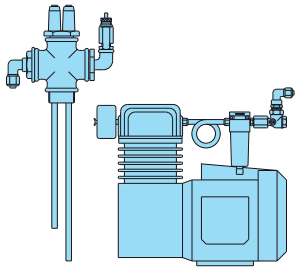

Kit of level probes with compressor

CALPEDA ROMANIA - INFINITY PUMPS SRL
Tel: 0268.33.47.47 / 0722.244.944
vanzari@calpeda.ro | www.calpeda.ro

Technical appendix

How to select a centrifugal pump

The selection of a centrifugal pump should be made according to the actual characteristics and conditions of the plant.
The required data for a correct selection are the following:

Flow Q
Quantity of fluid delivered by the pump in the unit of time, generally expressed in m³/h.

Total manometric head Hmt
It is considered as the sum between the geometric head exsisting between the fluid levels and the head loss due to frictions from the fluid passage in the pipework, into the pump and relevant hydraulic accessories.
The expression is the following:

Hmt = Hg + Δpc mt fluid column

Hg = geometric head inlet (Hga) + geometric head outlet (Hgp)
Δpc = sum of head loss of the plant calculated from the following data:

- Diameter, length and material of the suction and delivery piping (see table no. 1 page 620).
- Number and type of elbows in the piping and hydraulic accessories such as foot valves, gate valves, non-return valves and strainers etc. (see table no. 2 page 620).
- Type, temperature, viscosity and density of the fluid (if different from that of water)

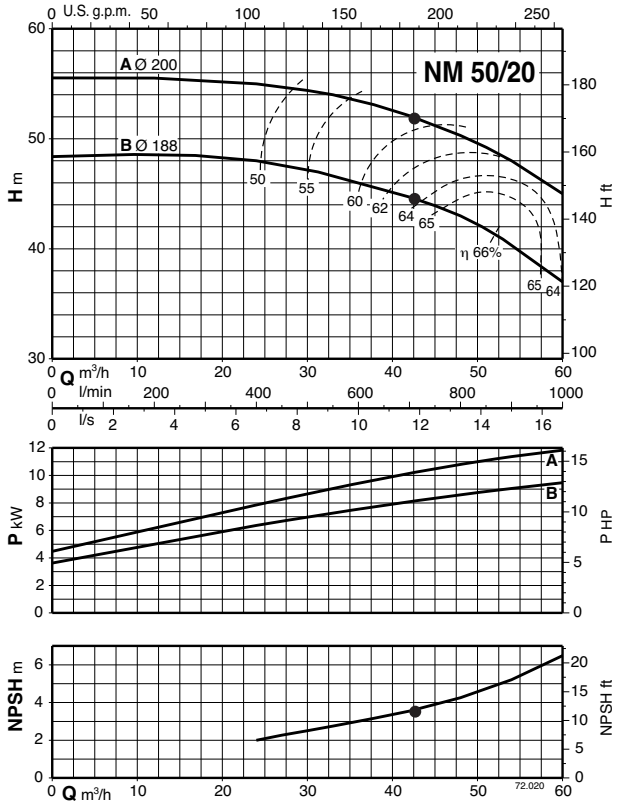

Pay attention to the manometric suction lift **Hga + Δpc asp**, which should be compared with the suction capability of the pump.
This suction capability or **NPSHr** is defined as net positve suction head and its value is obtained from a curve in accordance with the flow.
For this purpose, once the pump has been selected according to the required flow and head, where possible at the middle of the curve, check the following simplified formula:

10 mt ± **Hga - Δpc asp. > NPSH** required + 0.5 mt

Hga is the difference in height between the free surface of the water, and its value is negative if the pump is installed above the free water surface.
Δpc asp is the sum of the remaining distributed (piping) and concentrate (valves, bends, etc.) suction head loss

If the final result is negative, it is often possible to adjust flow via a gate valve on the delivery side, in order to restore correct pump operating conditions, without cavitation.

For fluid temperatures higher than the average of about 20°C, the pumps loose their suction capability.
Such changes, referred to pumps with suction capability of 7 meter at normal temperature, are shown on table no. 3 page 621.

CHARACTERISTIC DATA OF THE PUMPS

Once the flow (Q) and total manometric head of the installation (Hmt) are established, the pump absorbed power **N** should be calculated through the following formula:

$$N = \frac{Q \times H \times \gamma}{367 \times \eta_p} \text{ in kW}$$

where:

Q = Flow in m3/h
H = Head in mt
γ = Fluid density (water = 1 kg/dm³)
ηp = Pump efficiency (Ex. Pump efficiency 68% = ⇨ $\eta p = 0.68$)

The pumps are normally connected to electric motors, which operate at 2900 rpm with 2-pole motors at 50Hz, or at 1450 rpm with 4-pole motors at 50Hz.
However, they can run at any other speed within the limits of design.
Therefore, when changing the number of revolutions, the pump performance will change according to the following rules:

The flow in proportion to the number of revolutions: $Q2 = Q1 \times \frac{n_2}{n_1}$

The head, in proportion to the square of the number of revolutions: $H2 = H1 \times \left(\frac{n_2}{n_1}\right)^2$

The absorbed power, in proportion to the cube of the number of revolutions: $N2 = N1 \times \left(\frac{n_2}{n_1}\right)^3$

CALPEDA ROMANIA - INFINITY PUMPS SRL
Tel: 0268.33.47.47 / 0722.244.944
vanzari@calpeda.ro | www.calpeda.ro

How to select a centrifugal pump

Calculation example for the selection of a centrifugal pump

Case A Istallation data

- Q (Flow) = 42 m³/h
- Hga (geometric head inlet) = 3,5 m
- Hgp (geometric head outlet) = 39 m
- 5 m DN 100 mm diameter suction pipe complete with 1 elbow and 1 foot valve
- 70 m DN 80 mm diameter delivery pipe with 1 non-return valve, 1 gate valve and 3 sweep elbows

Hg = Hgp + Hga = 39 + 3,5 = 42,5 m Geometric head of the installation

Δpc = total head loss

Suction side:	
5 m Ø100 piping	pc = 0,12 m
1 Elbows	pc = 0,045 m
1 Foot valve	pc = 0,46 m
Delivery side:	
70 m Ø 80 pipe	pc = 5,25 m
1 Non-return valve	pc = 0,5 m
1 Gate valve	pc = 0,05 m
3 Elbows	pc = 0,09 m
Total	**Δpc = 6,5 m.**

Considering that the calculation has been made for new pipes, an increase of 15/20% is to be applied for ageing etc. Therefore the total head loss Δp amounts to about 8 m.
Therefore, the total manometric head which the pump must achieve is:

Hmt = Hg + Δp = Hgp + Hga + Δpc = 39 + 3,5 + 8 = 50,5 m total.
The pump type NM 50/20AE can be chosen (see pump diagram)

A) Operation with suction lift

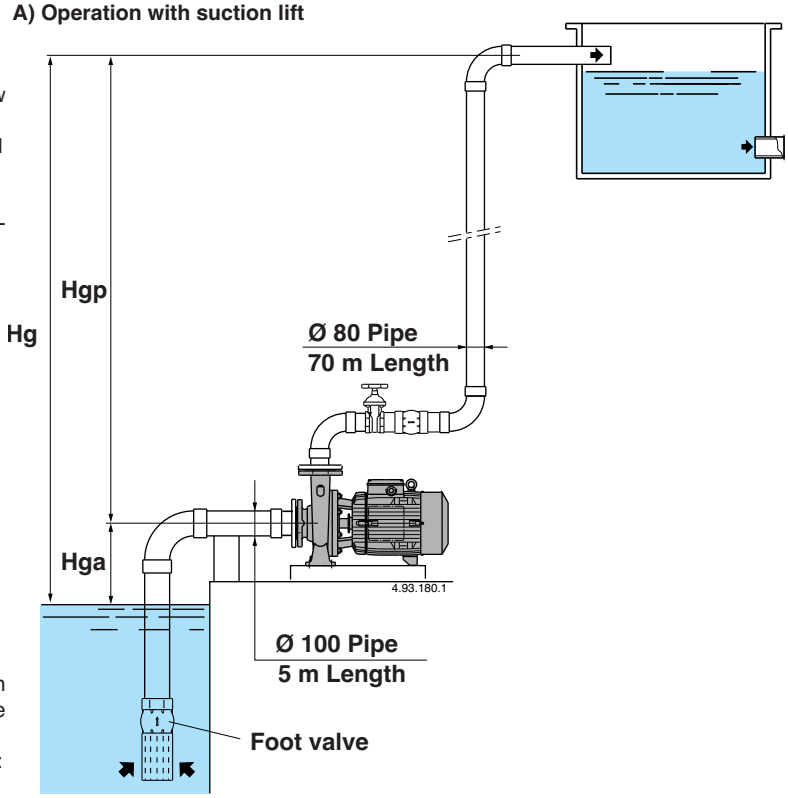

Case B Istallation data

- Q (Flow) = 42 m³/h
- Hga (geometric head inlet) = 3,5 m
- Hgp (geometric head outlet) = 39 m
- 5 m DN 100 mm diameter suction pipe complete with 1 gate valve and 1 foot valve
- 70 m DN 80 mm diameter delivery pipe with 1 non-return valve, 1 gate valve and 3 sweep elbows

Hg = Hgp - Hga = 39 - 3,5 = 35,5 m Geometric head of the installation

Δpc = total head loss

Suction side:	
5 m Ø 100 piping	pc = 0,12 m
1 Non-return valve	pc = 0,5 m
1 Gate valve	pc = 0,05 m
Delivery side:	
70 m Ø 80 pipe	pc = 5,25 m
1 Non-return valve	pc = 0,5 m
1 Gate valve	pc = 0,05 m
3 Elbows	pc = 0,09 m
Total	**Δpc = 6,5 m**

Considering that the calculation has been made for new pipes, an increase of 15/20% is to be applied for ageing etc. Therefore the total head loss Δpc amount to about 8 m.
Therefore, the total manometric head which the pump must achieve is:

Hmt = Hg + Δp = Hgp - Hga + Δpc = 39 - 3,5 + 8 = 43,5 m total.
The pump type NM 50/20BE can be chosen (see pump diagram)

B) Operation under positive suction head

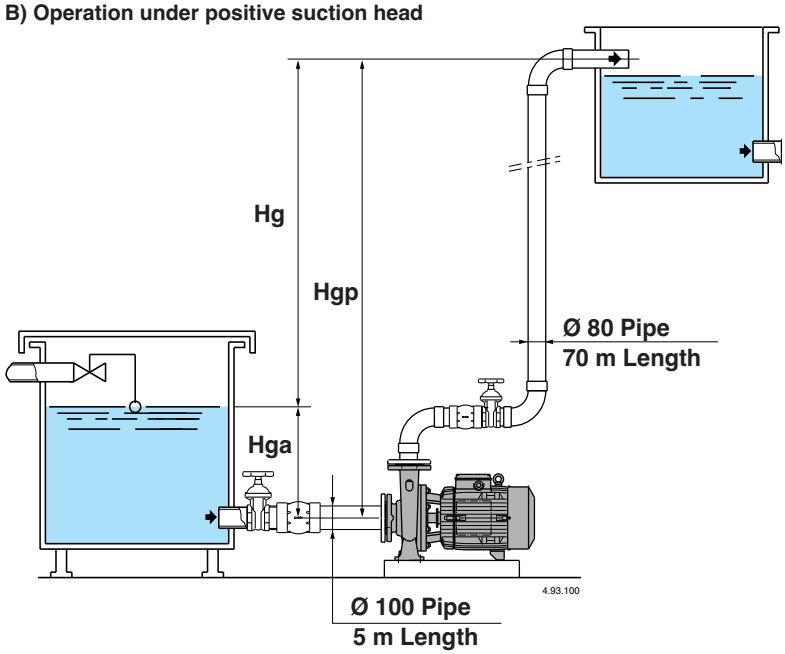

CALPEDA ROMANIA - INFINITY PUMPS SRL
Tel: 0268.33.47.47 / 0722.244.944
vanzari@calpeda.ro | www.calpeda.ro

ACCESSORIES FOR WATER SUPPLY

Foot valve with strainer - Sealing member installed on the lower end of the suction pipe. It prevents the water coming out from the piping and pump at every plant stop. It must be always immersed in the fluid at an installation depth which allows a perfect operation without cavitation.
It is a good rule to also install a float switch to automatically stop the pump when the water goes below a fixed level.

Non-return valve - It must be installed on the pump delivery port to avoid reflux in case of a sudden stop of the plant. It is recommended using a type fitted with an inner return spring and with ogive shutter, as this will help to diminish water hammering.

Gate valve - The installation of a gate valve is very important. In addition to allowing the pump to be dissasembled without emptying the plant, it is used to start the plant and to adjust the flow.

PIPING

The piping must be selected in-line with the water velocity which is recommended to be 1.5 meter per second on the suction side and 3 meter per second on the delivery side. The calculation of the suction piping must be carefully checked so as to avoid the maximum head loss and allow the pumps maximum suction capability. The piping must be perfectly tight and have no counterslopes towards the pump port, so to avoid the development or entrapment of air bubbles or pockets.
All the piping must be secured to rests, so that they will not weigh on the pump ports.

Problems at the pump

Faults	Possible causes
Jammed pump	This may happen after periods of inactivity due to inner oxidation. To release smaller sized monobloc electropumps use a screwdriver at the notch on the back part of the shaft. For the larger sizes, turn on the shaft or the flexible coupling
Pumps which do not prime	Pump and/or suction pipe with air entraped. Uncomplete priming or totally unprimed. Possible air entering from taps, drain or fill plugs, joints or stuffing box Foot valve not fully immersed in the fluid or obstructed by deposits. Suction lift too high compared with the capability of the pump. Wrong direction of rotation Wrong number of revolutions
Insufficient flow	Piping and accessories of too small a diameter which cause too high head loss. Jammed impeller with presence of debris in the vanes. Corroded or broken impeller Impeller wear rings and/or pump casing worn by abrasion. Gas presence in the water, or too high fluid viscosity in case of fluids different from water.
Noise and vibrations in the pump	Unbalanced rotary part or worn ball bearings. Pump and piping not properly secured. Too low flow rate for the selected pump Operation with cavitation
Overloaded motor	Pump characteristics higher than those of the plant Fixed and rotary parts in contact tending to seize owing to a lack of lubrication Too high rotation speed Wrong mains supply Poor unit allignement Fluid with too higher density than the design

CALPEDA ROMANIA - INFINITY PUMPS SRL
Tel: 0268.33.47.47 / 0722.244.944
vanzari@calpeda.ro | www.calpeda.ro

How to select a Pressure Boosting Sets

Choosing a pressure-boosting set

Required quantity of water

The public water-supply system is normally capable of supplying water at an adequate pressure and capacity level to the various outlets connected to it.
In those cases where a water-supply system is non-existent or insufficient for correct operation of the various facilities, a pressure-boosting system has to be installed to ensure an acceptable level of pressure and capacity also at the outlets in the most unfavourable positions.
The size of the water-supply unit is determined according to the quantity of water and pressure required.

Residential buildings

The main data needed for calculation of the quantity of water required is given in the following list:
- the number of outlets
- consumption per each type of outlet (Tab.1)
- the contemporaneity factor (Fc)

Table 1: Maximum consumption at points of demand

Outlet	Qu. delivered (l/min)
Sink	10
Wash-basin	10
Bath/whirlpool tub	18
Shower	12
WC - flush-tank type	7
WC - fast-feed type	90
Bidet	6
Washing machine	12
Kitchen sink	12
Dishwasher	8
Outlet w/ 1/2” tap	20
Outlet w/ 3/4” tap	25

The maximum theoretical requirement is given by the sum of the quantities of water delivered to the various outlets of an appartment multiplied by the number of appartments. In practice, it is generally found that only some of the outlets are used simultaneously.
The contemporaneity factor (Fc) allows for definition of the real maximum delivery that may be required by the outlets.
The following formulae are used to calculate the Fc factor. The value “Ut” is the total number of outlets (the number of outlets in an appartment multiplied by the number of appartments).

Appartments with 1 toilet - flush-type tank: $Fc = \frac{1}{\sqrt{0{,}85 \times Ut}}$

Appartments with 1 toilet - fast-feed type: $Fc = \frac{1}{\sqrt{0{,}7 \times Ut}}$

Appartments with 2 toilets - flush-type tank: $Fc = \frac{1}{\sqrt{1{,}1 \times Ut}}$

Appartments with 2 toilets - fast-feed type: $Fc = \frac{1}{\sqrt{0{,}83 \times Ut}}$

Diagram **A** gives the values of actual delivery, which depend on the number of appartments connected to the water-supply system. Seven outlets are hypothesized for one-bathroom appartments and ten outlets for two-bathroom appartments.

Non-residential buildings

For calculation of quantities of water required, the following types of building are considered:
- offices
- shopping centres
- hospitals
- hotels

These buldings require quantities of water greater than those needed in residential buildings.
Diagram **B** shows the values of actual delivery for the main types of building. The values are based on hypothetical numbers of persons present in these buildings.
These values offer a guideline and may vary in accordance with particular requirements of projects.

CALPEDA ROMANIA - INFINITY PUMPS SRL
Tel: 0268.33.47.47 / 0722.244.944
vanzari@calpeda.ro | www.calpeda.ro

How to select a Pressure Boosting Sets

Choosing a pressure-boosting set

A Consumption in residential buildings

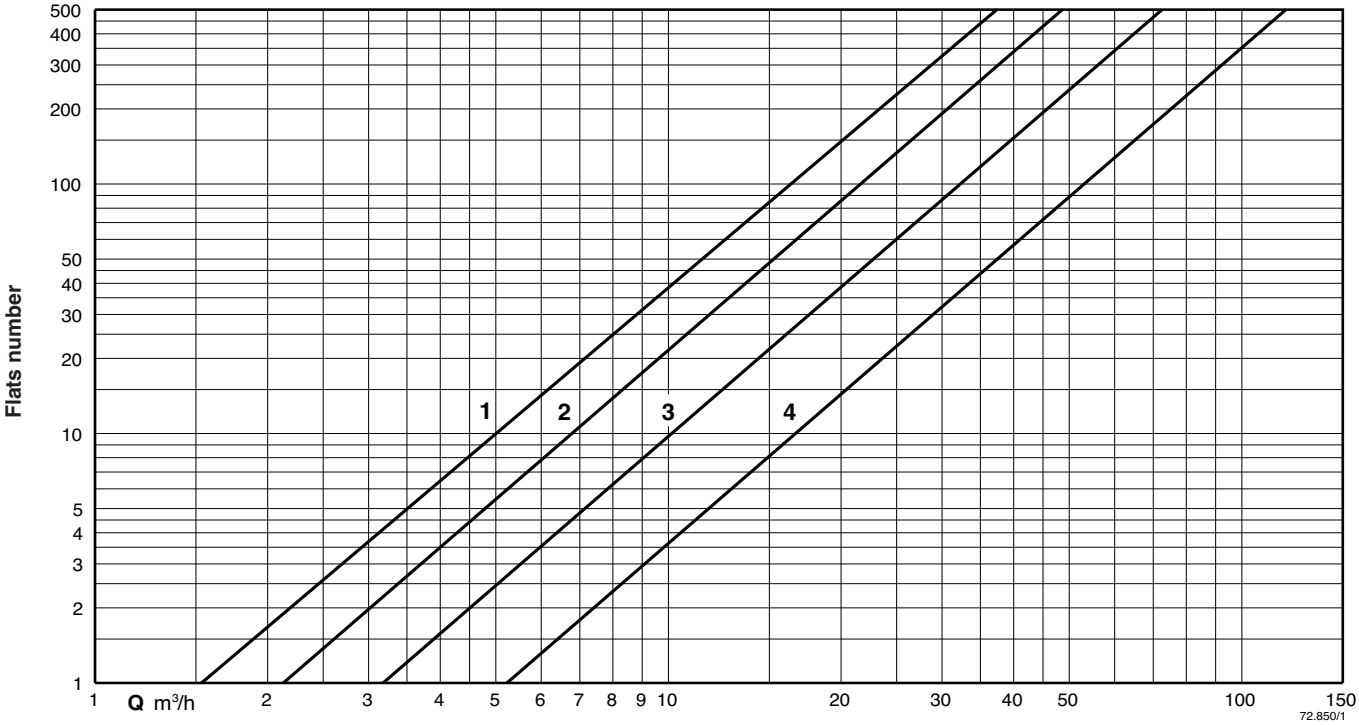

1 Appartments with one toilet, flush-tank type
2 Appartments with two toilets, flush-tank type
3 Appartments with one toilet, fast-feed type
4 Appartments with two toilets, fast-feed type

B Consumption in non-residential buildings

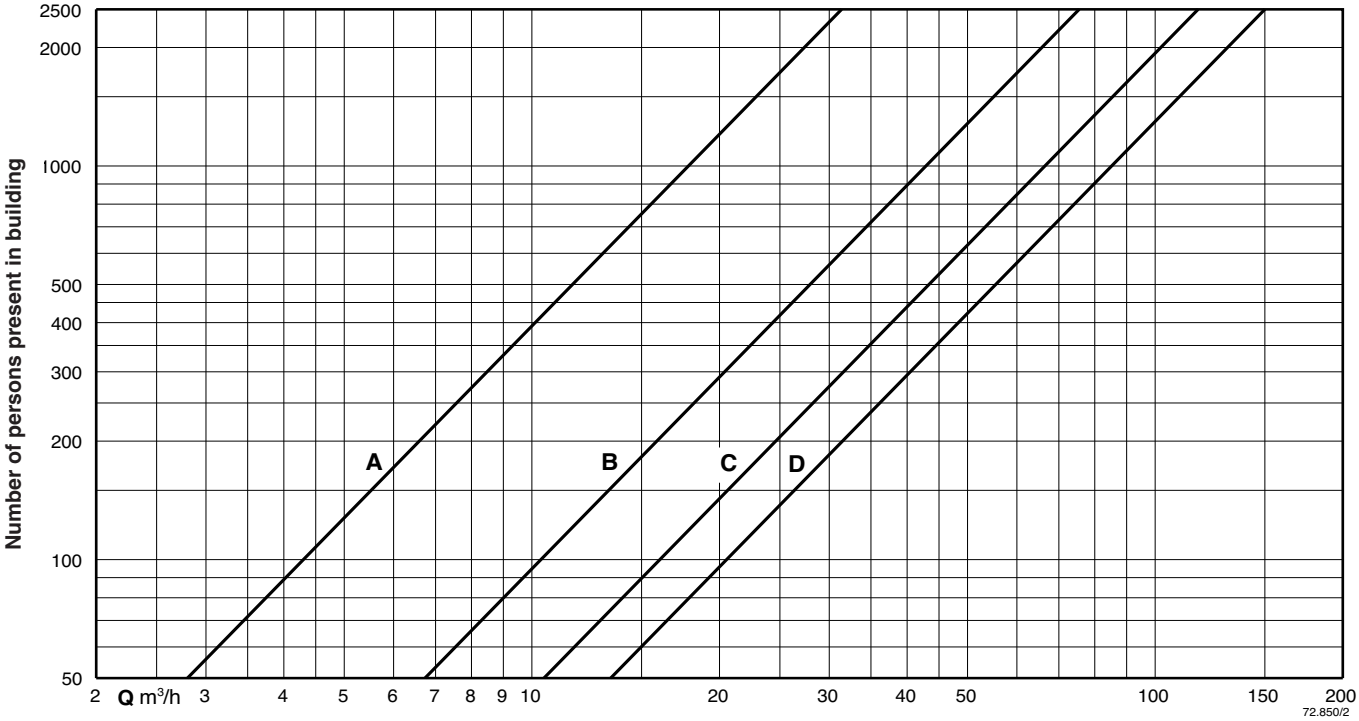

A Offices
B Shopping centres
C Hospitals
D Hotels

CALPEDA ROMANIA - INFINITY PUMPS SRL
Tel: 0268.33.47.47 / 0722.244.944
vanzari@calpeda.ro | www.calpeda.ro

How to select a Pressure Boosting Sets

Choosing a pressure-boosting set

Delivery head

The outlet pressure required for proper operation of electrical appliances must not be lower than 1.5 bar and not greater then 4-5 bar.
When the pressure level is insufficient and to such a degree that it impedes operation of domestic appliances, a pressure-boosting system must be installed to ensure adequate pressure also at the more unfavourably—located points of demand.
The values to consider for calculation of the pressure level are the following:

- **Hg** the geodetic head between the pressure-boosting unit and the highest outlet.
- **Ha** the suction lift.
- **Pi** the initial pressure (or positive suction head).
- **Pr** the minimum residual pressure at the highest outlet (normally 1.5 bar).
- **Pc** the system head loss.
- **Δp** the difference in pressure between starting and stopping pumps.

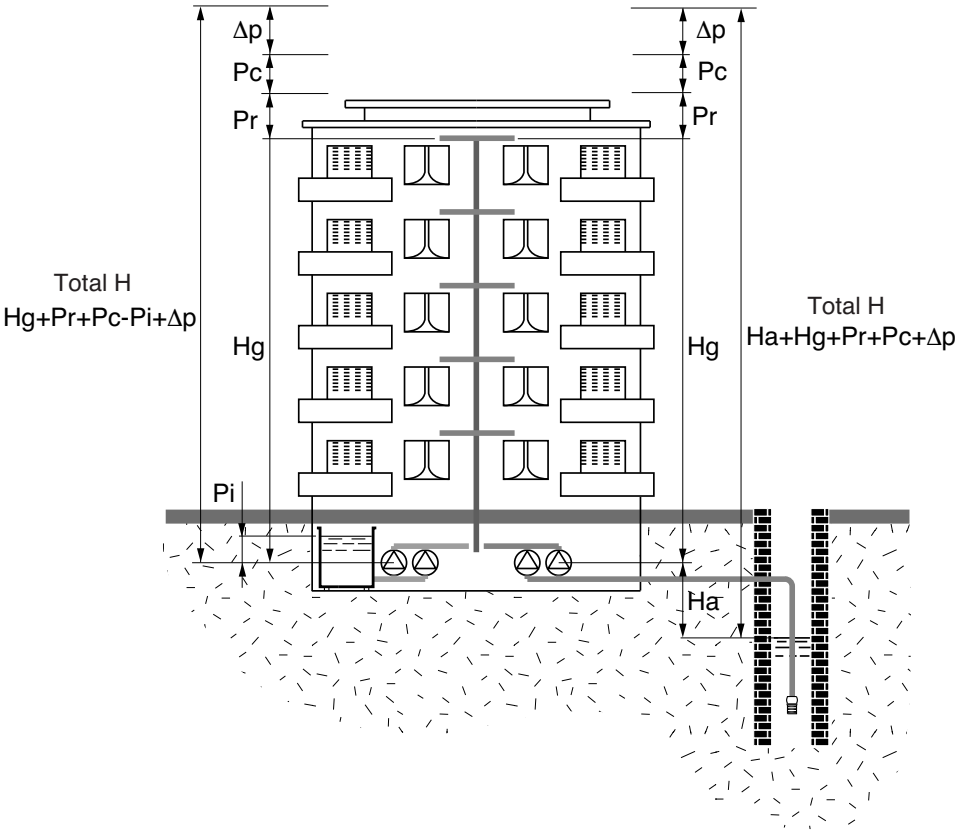

When the pumps draw water from a well, the dynamic height difference (Ha), when pumps are operating, should not exceed 4 m.
A greater suction head or erroneous sizing of the suction pipe may cause improper operation of the pumps - e.g. cavitation and priming loss.
The pumps are installed with a positive suction head when they are connected to a raised tank or a pressurized primary collection tank.

The pumps therefore have an initial pressure at the suction port which can vary from 0.1 bar (suction with a collection tank) to 2-3 bar (with suction from a pressurized primary collection tank).
When choosing a pressure-boosting system, the positive value of the initial pressure (Pi) must be considered as a value to be subtracted from the height (Hg).

The system head loss (Pc) are given by the sum of the losses of the pipes (including the suction pipe) added to the losses due to gate valves, non-return valves, water purifiers, counters, filters, elbows etc.

Head loss in the tubes, caused by the friction of the water against the inner surface of the pipelines, may be quantified as 0.5 m per floor in the case of new systems and 1 m per floor in the case of old systems.

To avoid pressure levels greater than 4-5 bar arriving at outlets on the lower floors of apartment blocks and other buildings with a height greater than 30 m (about 10 floors), pressure reducers must be installed at the offtake point of the lower floors or otherwise two pressure-boosting units can be installed: one for the lower floors and one for the upper floors.

CALPEDA ROMANIA - INFINITY PUMPS SRL
Tel: 0268.33.47.47 / 0722.244.944
vanzari@calpeda.ro | www.calpeda.ro

How to select a Pressure Boosting Sets

Surge tanks

The purpose of surge tanks is to retain a quantity of water, under pressure, thus avoiding continuous pump starts, as water is demanded.
The selection of the vessel must be made in-line with the pump flow and pressure and number of starts allowed by the motor.
For water pressure units with more than one pump, the selection of the vessel should refer to the data for one pump only.

The surge vessel may be of the following type:
a) Air cushion vessels
b) Membrane vessels

Air cushion vessels
In this type of vessels the air and water are in contact with each other. This will therefore result in a decrease of air as it dissolves into the water.
The installation will therefore require an automatic air feed ("Ariamat" air feeder, compressor or auto valve connected to existing compressed air network).
Air cushion vessels are normally manufactured from hot galvanized sheet steel, with rated pressures from 6 to 12 bar and capacity from 100 to 5000 ltrs, complete with safety valves, pressure gauge and level indicator.

Membrane vessels
These vessels are fitted with an inner membrane separating the water and air. When installed , they must be pre-charged at a pressure in-line with the pressure switch settings.

Calculation to size an air cushion vessel.

$$Vt = \frac{1.25 \times Qm \times (P1 + 10)}{4 \times Z \times (P1 - P2)}$$

where:
Vt = Total volume of air cushion vessel in m³
Qm = Average pump flow in m³
P1 = Maximum set pressure of pressure switch
P2 = Minimum set pressure of pressure switch
Z = Maximum number of starts/hour allowed by the motor (see table).

Qm flow is the average between the flow at starting pressure (Q min) and the flow at stop pressure (Q max):

$$Qm = \frac{Qmin + Qmax}{2} \quad (m^3/h)$$

Exemple: Pump MXV 40-807
P1 = 70 m
P2 = 50 m
Qm = 9,45 m³/h
Z = 23 starts/hour

$$Vt = \frac{1.25 \times 9{,}45 \times (70 + 10)}{4 \times 23 \times (70 - 50)} = 0{,}514 \ m^3$$

From the calculation, it would result in the selection of a 500 litre vessel.

Calculation to size a membrane vessel

$$Vt = \frac{Qm}{4 \times Z} \times \frac{1}{1 - \frac{(P2 - 2)}{P1}}$$

where:
Vt = Total volume of air cushion vessel in m³
Qm = Average pump flow in m³
P1 = Maximum set pressure of pressure switch
P2 = Minimum set pressure of pressure switch
Z = Maximum number of starts/hour allowed by the motor (see table)

Exemple: Pump MXV 40-807
P1 = 70 m
P2 = 50 m
Qm = 9,45 m³/h
Z = 23 starts/hour

$$Vt = \frac{9{,}45}{4 \times 23} \times \frac{1}{1 - \frac{(50 - 2)}{70}} = 0{,}327 \ m^3$$

From the calculation it will result in the selection of a 300 litre membrane vessel.

CE 97/23 PED APPROVED PRESSURE VESSELS (Air tanks)

Hot galvanized vessels

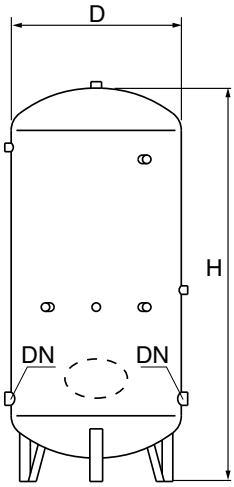

TYPE	Dimensions D x H mm	DN	Weight kg
100- 5	400 x 1020	G 1	32
200- 5	450 x 1440	G 1	48
300- 8	550 x 1500	G 1 1/2	65
500- 8	650 x 1820	G 2	105
500- 12	600 x 2000	G 2	120
800- 8	800 x 1900	G 2	145
1000- 8	800 x 2150	G 2 1/2	160
1000- 12 ▲	800 x 2300	G 2 1/2	203
1500- 5	950 x 2500	G 2	190
1500- 8 ▲	950 x 2500	G 2	255
2000- 8 ▲	1100 x 2570	G 2 1/2	330
2000- 12 ▲	1000 x 2780	G 2 1/2	387
3000- 8 ▲	1250 x 2930	G 3	470
3000- 12 ▲	1200 x 2930	G 3	596
4000- 8 ▲	1450 x 3090	G 3	620
4000- 12 ▲	1450 x 3090	G 3	880
5000- 8 ▲	1450 x 3590	G 4	715
5000- 12 ▲	1450 x 3590	G 4	1020

The vessels are suitable for water up to 50 °C

They are all approved at manufacturerís premises and are supplied complete with safety valve, tested pressure gauge and fittings.

CE 97/23 PED APPROVED MEMBRANE VESSELS

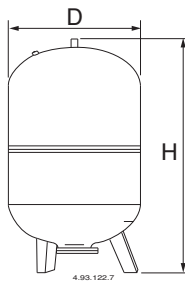

TYPE	Pressure bar	Dimensions D x H mm	DN	weight kg
SM 60 V	10	382 x 845	G 1	-
SM 80 V	10	450 x 850	G 1	-
SM 100 V	10	450 x 950	G 1	-
SM 200 V	10	550 x 1255	G 1 1/2	-
SM 300 V	10	630 x 1405	G 1 1/2	-
SM 500 V	10	780 x 1550	G 1 1/2	-
SM 750 V	10	780 x 1940	G 1 1/2	-
SM 1000 V	10	980 x 1970	G 2	-

EPDM diaphragm
Temperature -10 ÷ +100 °C
With safety valve and pressure gauge 0÷16 bar

CALPEDA ROMANIA - INFINITY PUMPS SRL
Tel: 0268.33.47.47 / 0722.244.944
vanzari@calpeda.ro | www.calpeda.ro

How to select a centrifugal pump

Number of starts/hour allowed for CALPEDA motors

Rated motor power output	kW	0,25	0,37	0,55	0,75	1,1	1,5	2,2	3	4	5,5	7,5	9,2	11	15	18,5	22	30	37	45
Max. number of starts/hour	Z	59	51	44	38	35	30	25	23	20	18	16	15	14	12	11	10	9	9	8

The number of starts/hour mentioned in the table is approximate.
The maximum admissible starts/hour depends on the pump model and are mentioned in the original operating manual.

Table no. 1
Head loss in m for steel pipes

Pipe G	Pipe Ø mm	Q m³/h	1	3	6	9	12	18	24	30	36	42	48	60	90	120	180	240	300	360	420
		Q l/min	16	50	100	150	200	300	400	500	600	700	800	1000	1500	2000	3000	4000	5000	6000	7000
G 1	DN 25	HL / v (m/100m / m/s)	2,7 / 0,6	21 / 1,7	80 / 3,5	-	-	-	-	-	-	-	-	-	-	-	-	-	-	-	-
G 1 1/4	DN 32		0,7 / 0,35	5,5 / 1	22 / 2,1	47 / 3,1	75 / 4	-	-	-	-	-	-	-	-	-	-	-	-	-	-
G 1 1/2	DN 40		-	1,8 / 0,7	**7 / 1,35**	14 / 1,9	23 / 2,5	50 / 3,8	90 / 5,2	-	-	-	-	-	-	-	-	-	-	-	-
G 2	DN 50		-	0,5 / 0,4	2,2 / 0,8	**4 / 1,25**	**8 / 1,5**	17 / 2,5	28 / 3,2	45 / 4,1	62 / 5	-	-	-	-	-	-	-	-	-	-
G 2 1/2	DN 65		-		0,6 / 0,5	1,2 / 0,75	2,1 / 1	**4,2 / 1,4**	8 / 2	12 / 2,5	17 / 3	22 / 3,4	28 / 4	45 / 5	-	-	-	-	-	-	-
	DN 80		-	-	-	-	0,8 / 0,7	1,6 / 0,95	**2,8 / 1,25**	**4,2 / 1,6**	6,5 / 2	7,5 / 2,1	10,5 / 2,6	15 / 3,3	32 / 4,9	50 / 6	-	-	-	-	-
	DN 100		-	-	-	-	-	0,55 / 0,6	0,9 / 0,8	1,4 / 1,1	2 / 1,25	**2,4 / 1,4**	**3,5 / 1,6**	5 / 2	11 / 3,2	20 / 4	40 / 6	-	-	-	-
	DN 125		-	-	-	-	-	-	-	-	-	0,9 / 0,95	1,2 / 1,1	**1,8 / 1,4**	4 / 2	6,5 / 2,7	15 / 4	23 / 5,2	-	-	-
	DN 150		-	-	-	-	-	-	-	-	-	-	-	0,6 / 0,9	**1,5 / 1,4**	**2,5 / 1,7**	5 / 2,7	8 / 3,5	14 / 4,8	20 / 5,6	-
	DN 200		-	-	-	-	-	-	-	-	-	-	-	-	0,4 / 0,8	**0,6 / 1**	**1,3 / 1,6**	2 / 2	3,5 / 2,6	4,6 / 3	6,5 / 3,5
	DN 250		-	-	-	-	-	-	-	-	-	-	-	-	-	-	0,4 / 1	**0,7 / 1,3**	**1,1 / 1,6**	1,6 / 2	2 / 2,3
	DN 300		-	-	-	-	-	-	-	-	-	-	-	-	-	-	-	0,3 / 0,9	0,45 / 1,25	**0,7 / 1,4**	**0,9 / 1,6**

Q Flow. **HL** Head loss, m per 100 m. **v** = Flow velocity: max 1,5 m/s for suction and 3 m/s for delivery.

Table no. 2
Head loss in cm for bends, gate valves, foot valves and check valves

Water flow velocity m/sec.	Elbows α = 30	Elbows α = 40	Elbows α = 60	Elbows α = 80	Elbows α = 90	α = 90 sweep elbow d/R = 0,4	d/R = 0,6	d/R = 0,8	d/R = 1	d/R = 1,5	Gate valves	Foot valves	Check valves
0,4	0,43	0,52	0,71	1,0	1,2	0,11	0,13	0,16	0,23	0,43	0,23	32	31
0,5	0,67	0,81	1,1	1,6	1,9	0,18	0,21	0,26	0,37	0,67	0,37	33	32
0,6	0,97	1,2	1,6	2,3	2,8	0,25	0,29	0,36	0,52	0,97	0,52	34	32
0,7	1,35	1,65	2,2	3,2	3,9	0,34	0,40	0,48	0,70	1,35	0,70	35	32
0,8	1,7	2,1	2,8	4,0	4,8	0,45	0,53	0,64	0,93	1,7	0,95	36	33
0,9	2,2	2,7	3,6	5,2	6,2	0,57	0,67	0,82	1,18	2,2	1,20	37	34
1,0	2,7	3,3	4,5	6,4	7,6	0,7	0,82	1,0	1,45	2,7	1,45	38	35
1,5	6,0	7,3	10	14	17	1,6	1,9	2,3	3,3	6	3,3	47	40
2,0	11	14	18	26	31	2,8	3,3	4,0	5,8	11	5,8	61	48
2,5	17	21	28	40	48	4,4	5,2	6,3	9,1	17	9,1	78	58
3,0	25	30	41	60	70	6,3	7,4	9	13	25	13	100	71
3,5	33	40	55	78	93	8,5	10	12	18	33	18	123	85
4,0	43	52	70	100	120	11	13	16	23	42	23	150	100
4,5	55	67	90	130	160	14	21	26	37	55	37	190	120
5,0	67	82	110	160	190	18	29	36	52	67	52	220	140

CALPEDA ROMANIA - INFINITY PUMPS SRL
Tel: 0268.33.47.47 / 0722.244.944
vanzari@calpeda.ro | www.calpeda.ro

Table no. 3
Diagram of manometric suction head with water up to 100 °C

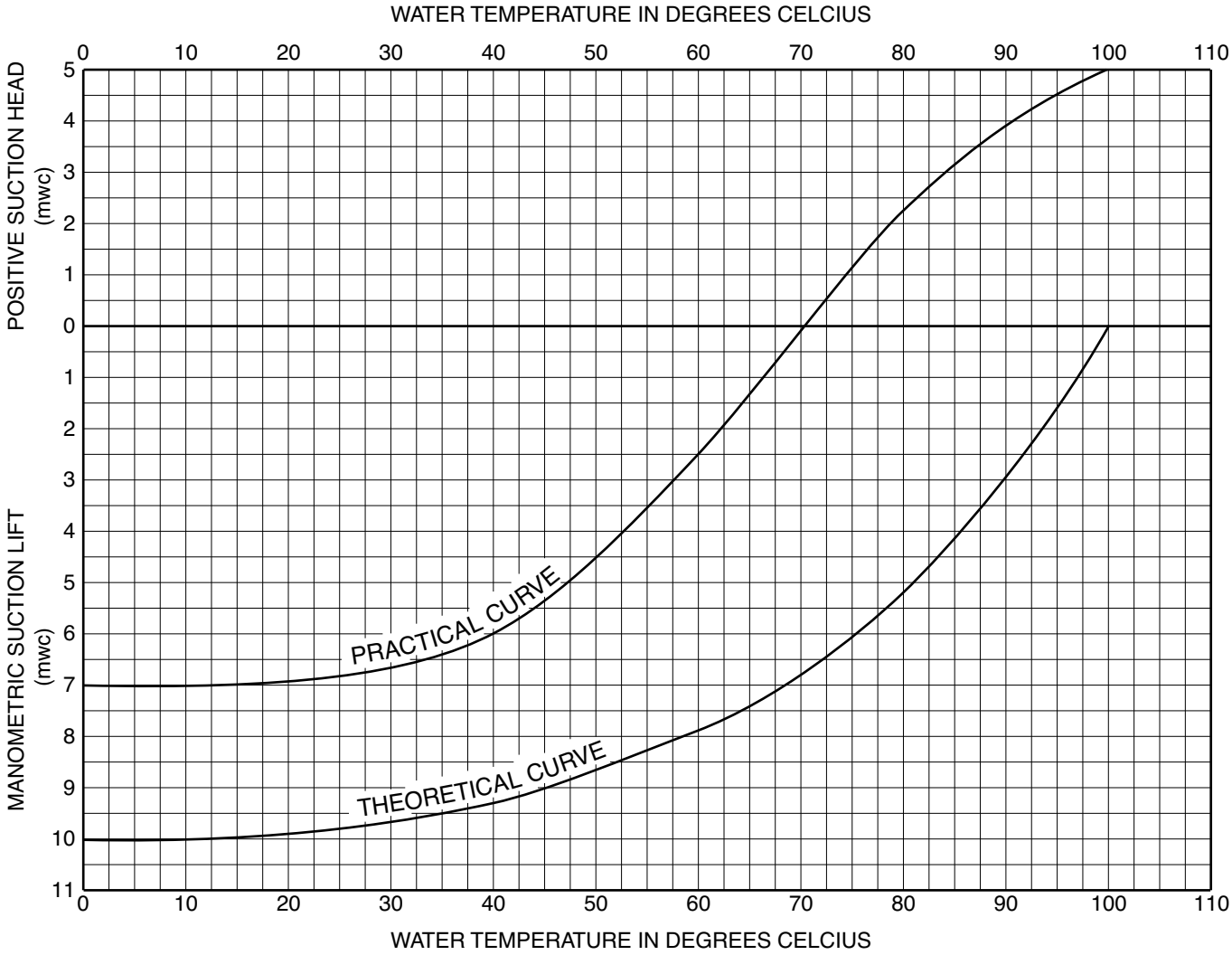

Diagram referred to pumps with manometric suction head of 7 mwc. at 20 °C

CALPEDA ROMANIA - INFINITY PUMPS SRL
Tel: 0268.33.47.47 / 0722.244.944
vanzari@calpeda.ro | www.calpeda.ro

Technical appendix

EFFICIENCY OF ELECTRIC MOTORS

Directive of the European Parliament COMMISSION REGULATION (EC) No 640/2009

Having regard to Directive 2005/32/EC of the European Parliament establishing a framework for the setting of ecodesign requirements for energy- related products, it specifies the time and the efficiency levels that motors sold in the European market will have to comply.

This Regulation shall apply to:

electric single speed motor, three-phase 50 Hz or 50/60 Hz, squirrel cage induction motor that:
-has 2 to 6 poles,
-has a rated voltage of U_N up to 1 000 V,
-has a rated output P_N between 0,75 kW and 375 kW,
-is rated on the basis of continuous duty operation.

This Regulation shall not apply to:

a) motors designed to operate wholly immersed in a liquid;
b) motors completely integrated into a product (for example gear, pump, fan or compressor) of which the energyperformance cannot be tested independently from theproduct;
c) motors specifically designed to operate:
- at altitudes exceeding 4000 metres above sea-level;
- where ambient air temperatures exceed 60 °C;
- in maximum operating temperature above 400 °C;
- where ambient air temperatures are less than -30 °C for any motor or less than 0 °C for a motor with air cooling;
- where the water coolant temperature at the inlet to a product is less than 0 °C or exceeding 32 °C;
- in potentially explosive atmospheres as defined in Directive 94/9/EC of the European Parliament and ofthe Council.

d) brake motors.

Each ecodesign requirement shall apply in accordance with thefollowing timetable:

1) **from 16 June 2011:**
motors shall not be less efficient than the IE2 efficiency level;

2) **from 1 January 2015:**
motors with a rated output of 7,5-375 kW shall not be less efficient than the IE3 efficiency level or meet the IE2 efficiency level, and be equipped with avariable speed drive.

3) **from 1 January 2017:**
all motors with a rated output of 0,75-375 kW shall not be less efficient than the IE3 efficiency level or meet the IE2 efficiency, and be equipped with avariable speed drive.

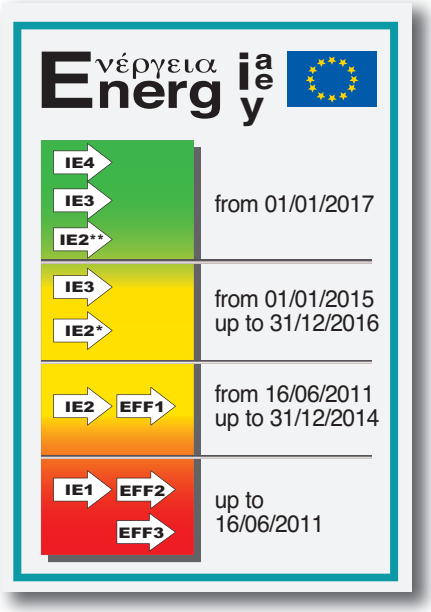

* IE2 up to 7,5 kW from 7,5 up to 375 kW shall be equipped with avariable speed drive
** IE2 from 0,75 up to 375 kW shall be equipped with a variable speed drive

CALPEDA ROMANIA - INFINITY PUMPS SRL
Tel: 0268.33.47.47 / 0722.244.944
vanzari@calpeda.ro | www.calpeda.ro

EFFICIENCY OF ELECTRIC MOTORS

Summary table of the levels of efficiency as expected in IEC 60034-30

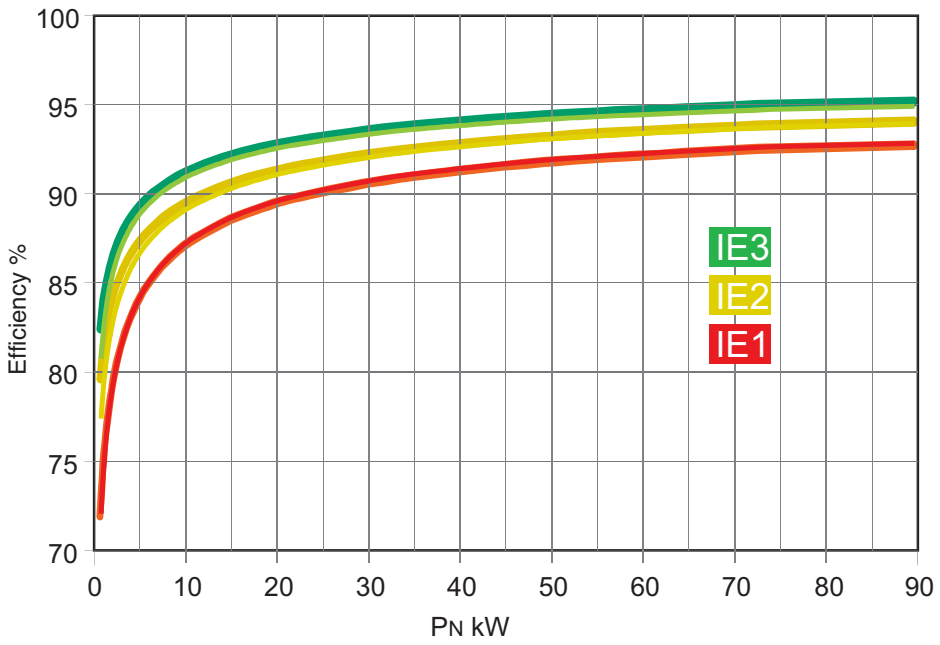

2-pole

Rated power output kW	Efficiency %		
	IE1	**IE2**	**IE3**
0.75	72.1	77.4	80.7
1.1	75.0	79.6	82.7
1.5	77.2	81.3	84.2
1.8	78.4	82.2	85.0
2.2	79.7	83.2	85.9
3	81.5	84.6	87.1
4	83.1	85.8	88.1
4.4	83.6	86.2	88.4
5.5	84.7	87.0	89.2
7.5	86.0	88.1	90.1
9.2	86.9	88.8	90.7
11	87.6	89.4	91.2
15	88.7	90.3	91.9
18.5	89.3	90.9	92.4
22	89.9	91.3	92.7
30	90.7	92.0	93.3
37	91.2	92.5	93.7
45	91.7	92.9	94.0
55	92.1	93.2	94.3
75	92.7	93.8	94.7
90	93.0	94.1	95.0

4-pole

Rated power output kW	Efficiency %		
	IE1	**IE2**	**IE3**
0.75	72.1	79.6	82.5
1.1	75.0	81.4	84.1
1.5	77.2	82.8	85.3
2.2	79.7	84.3	86.7
3	81.5	85.5	87.7
4	83.1	86.6	88.6
5.5	84.7	87.7	89.6
7.5	86.0	88.7	90.4
9.2	86.9	89.3	91.0
11	87.6	89.8	91.4
15	88.7	90.6	92.1
18.5	89.3	91.2	92.6
22	89.9	91.6	93.0
30	90.7	92.3	93.6
37	91.2	92.7	93.9
45	91.7	93.1	94.2
55	92.1	93.5	94.6
75	92.7	94.0	95.0
90	93.0	94.2	95.2

CALPEDA ROMANIA - INFINITY PUMPS SRL
Tel: 0268.33.47.47 / 0722.244.944
vanzari@calpeda.ro | www.calpeda.ro

EFFICIENCY OF WATER PUMPS

Directive of the European Parliament COMMISSION REGULATION (EC) No 547/2012

With the Eco-design Directive of Energy Using Products (**ErP Directive – Energy-related Products**) the European Union wants to improve the design of equipment that "consume" significant energy (e.g. televisions, refrigerators, washing machines, boilers, pumps, motors etc.) to improve eco-design providing environmental sustainability, reducing negative environmental impact as the consequence of production, use and disposal of products.

The objective of the Directive is to force manufacturers and importers to produce and distribute products with high energy efficiency, and reduced carbon output.
The criteria for eco-design will be an integral part of the declaration of conformity (**CE**), which is a necessary requirement/mark for products being sold in the EU.

This Regulation shall apply to:
The Regulation 547/2012/EC defines the eco-design requirements for marketing centrifugal water pumps in the European market, even if they are integrated in other products (OEM). The Regulation provides the introduction and the calculation of a minimum efficiency index (MEI).
The pumps involved in the Regulation are:

- End suction own bearing water pumps (ESOB) designed for pressures up to 16 bar, a maximum shaft power of 150 kW, a maximum head of 90 m at nominal speed of 1450 rpm and a maximum head of 140 m at nominal speed of 2900 rpm;
- End suction close coupled water pumps (ESCC) designed for pressures up to 16 bar, a maximum shaft power of 150 kW, a maximum head of 90 m at nominal speed of 1450 rpm and a maximum head of 140 m at nominal speed of 2900 rpm;
- End suction close coupled in-line water pumps (ESCCi) designed for pressures up to 16 bar, a maximum shaft power of 150 kW, a maximum head of 90 m at nominal speed of 1450 rpm and a maximum head of 140 m at nominal speed of 2900 rpm;
- Vertical multistage water pumps (MS-V) designed for pressures up to 25 bar, with a nominal speed of 2900 rpm and a maximum flow of 100 m3/h (27,78·10–3 m3/s);
- Submersible multistage water pumps (MSS) with a nominal outer diameter of 4″ (10,16 cm) or 6″ (15,24 cm) designed to operate in a borehole at nominal speed of 2 900 rpm, at operating temperatures within a range of 0 °C and 90 °C;

This Regulation shall not apply to:

a) Water pumps designed specifically for pumping clean water at temperatures below – 10 °C or above 120 °C.
b) Water pumps designed only for fire-fighting applications.
c) Displacement water pumps.
d) Self-priming water pumps.

This regulation shall apply in accordance with the following timetable:

1) From 1 January 2013, water pumps shall have: at the best efficiency point (BEP), at part load (PL), at over load (OL) a minimum efficiency index MEI ≥ 0,10.
2) From 1 January 2015, water pumps shall have: at the best efficiency point (BEP), at part load (PL), at over load (OL) a minimum efficiency index MEI ≥ 0,40.

The information on benchmark efficiency is available on the web site *www.europump.org/efficiencycharts*

The MEI value of Calpeda pumps is available on the web site *www.calpeda.com*

Regulation (EU) No 547/2012

- The benchmark for most efficient water pumps is MEI ≥ 0,70.
- The efficiency of a pump with a trimmed impeller is usually lower than that of a pump with the full impeller diameter. The trimming of the impeller will adapt the pump to a fixed duty point, leading to reduced energy consumption. The minimum efficiency index (MEI) is based on the full impeller diameter.
- The operation of this water pump with variable duty points may be more efficient and economic when controlled, for example, by the use of a variable speed drive that matches the pump duty to the system.